MIAMI-DADE COUNTY, FLORIDA
METRO-DADE FLAGLER BUILDING
140 WEST FLAGLER STREET, SUITE 1603
MIAMI, FLORIDA 33130-1563
(305) 375-2901 FAX (305) 375-2908
www.buildingcodeonline.com

BUILDING CODE COMPLIANCE OFFICE (BCCO)
PRODUCT CONTROL DIVISION

NOTICE OF ACCEPTANCE (NOA)

PGT Industries, Inc.
1070 Technology Drive
Nokomis, FL 34275

SCOPE:

This NOA is being issued under the applicable rules and regulations governing the use of construction materials. The documentation submitted has been reviewed by Miami-Dade County Product Control Division and accepted by the Board of Rules and Appeals (BORA) to be used in Miami Dade County and other areas where allowed by the Authority Having Jurisdiction (AHJ).

This NOA shall not be valid after the expiration date stated below. The Miami-Dade County Product Control Division (In Miami Dade County) and/or the AHJ (in areas other than Miami Dade County) reserve the right to have this product or material tested for quality assurance purposes. If this product or material fails to perform in the accepted manner, the manufacturer will incur the expense of such testing and the AHJ may immediately revoke, modify, or suspend the use of such product or material within their jurisdiction. BORA reserves the right to revoke this acceptance, if it is determined by Miami-Dade County Product Control Division that this product or material fails to meet the requirements of the applicable building code.

This product is approved as described herein, and has been designed to comply with the Florida Building Code, including the High Velocity Hurricane Zone.

DESCRIPTION: Series "SGD-730" Aluminum Sliding Glass Doors – L.M.I.

APPROVAL DOCUMENT: Drawing No. **4406-1**, titled "Alum. Sliding Glass Door, Impact", sheets 1 through 17 of 17, dated 4/15/05 with revision E dated 4/12/06, prepared by manufacturer, signed and sealed by Lucas Andrew Turner, P.E., bearing the Miami-Dade County Product Control Revision stamp with the Notice of Acceptance number and expiration date by the Miami-Dade County Product Control Division.

MISSILE IMPACT RATING: Large and Small Missile Impact Resistant

LABELING: Each unit shall bear a permanent label with the manufacturer's name or logo, city, state and following statement: "Miami-Dade County Product Control Approved", unless otherwise noted herein.

RENEWAL of this NOA shall be considered after a renewal application has been filed and there has been no change in the applicable building code negatively affecting the performance of this product.

TERMINATION of this NOA will occur after the expiration date or if there has been a revision or change in the materials, use, and/or manufacture of the product or process. Misuse of this NOA as an endorsement of any product, for sales, advertising or any other purposes shall automatically terminate this NOA. Failure to comply with any section of this NOA shall be cause for termination and removal of NOA.

ADVERTISEMENT: The NOA number preceded by the words Miami-Dade County, Florida, and followed by the expiration date may be displayed in advertising literature. If any portion of the NOA is displayed, then it shall be done in its entirety.

INSPECTION: A copy of this entire NOA shall be provided to the user by the manufacturer or its distributors and shall be available for inspection at the job site at the request of the Building Official.
This NOA **revises NOA # 05-0526.05** and consists of this page 1 and evidence pages E-1, E-2 and E-3, as well as approval document mentioned above.
The submitted documentation was reviewed by **Manuel Perez, P.E.**

PRODUCT CONTROL ACCEPTED

PGT Industries, Inc.

NOTICE OF ACCEPTANCE: EVIDENCE SUBMITTED

A. DRAWINGS

1. Manufacturer's die drawings and sections.
2. Drawing No **4406-1**, Sheets 1 through 17 of 17, titled "Alum. Sliding Glass Door, Impact", prepared by manufacturer, dated 4/15/05 with revision E dated 4/12/06, signed and sealed by Lucas Andrew Turner, P.E.

B. TESTS

1. Test reports on 1) Uniform Static Air Pressure Test, Loading per FBC, TAS 202-94
   2) Large Missile impact Test per FBC, TAS 201-94
   3) Cyclic Wind Pressure Loading per FBC, TAS 203-94

   along with marked-up drawings and installation diagram of aluminum sliding glass door, prepared by Fenestration Testing Laboratory, Inc., Test Report No. **FTL-4454**, dated 01/31/05, signed and sealed by Edmundo Largaespada, P.E.
   (Submitted under NOA # 04-0622.07)
2. Test reports on 1) Air Infiltration Test, per FBC, TAS 202-94
   2) Uniform Static Air Pressure Test, Loading per FBC, TAS 202-94
   3) Water Resistance Test, per FBC, TAS 202-94
   4) Large Missile Impact Test per FBC, TAS 201-94
   5) Cyclic Wind Pressure Loading per FBC, TAS 203-94
   6) Forced Entry Test, per FBC 2411 3.2.1 (b) and TAS 202-94

   along with marked-up drawings and installation diagram of aluminum sliding glass door, prepared by Fenestration Testing Laboratory, Inc., Test Report No. **FTL-4524**, dated 01/31/05, signed and sealed by Edmundo Largaespada, P.E.
   (Submitted under NOA # 04-0622.07)
3. Test reports on 1) Air Infiltration Test, per FBC, TAS 202-94
   2) Uniform Static Air Pressure Test, Loading per FBC, TAS 202-94
   3) Water Resistance Test, per FBC, TAS 202-94
   4) Large Missile Impact Test per FBC, TAS 201-94
   5) Cyclic Wind Pressure Loading per FBC, TAS 203-94
   6) Forced Entry Test, per FBC 2411 3.2.1 (b) and TAS 202-94

   along with marked-up drawings and installation diagram of an aluminum sliding glass door, prepared by Fenestration Testing Laboratory, Inc., Test Report No. **FTL-4159**, dated 03/25/04, signed and sealed by Edmundo Largespada, P.E.
   (Submitted under NOA # 04-0622.07)

Manuel Perez, P.E.
Product Control Examiner
NOA No 06-0523.03
Expiration Date: November 11, 2009
Approval Date: August 3, 2006

4. Test reports on 1) Air Infiltration Test, per FBC, TAS 202-94
   2) Uniform Static Air Pressure Test, Loading per FBC, TAS 202-94
   3) Water Resistance Test, per FBC, TAS 202-94
   4) Large Missile Impact Test per FBC, TAS 201-94
   5) Cyclic Wind Pressure Loading per FBC, TAS 203-94
   6) Forced Entry Test, per FBC 2411 3.2.1 (b) and TAS 202-94

   along with marked-up drawings and installation diagram of an aluminum sliding glass door, prepared by Fenestration Testing Laboratory, Inc., Test Report No. **FTL-4161**, dated 03/26/04, signed and sealed by Edmundo Largespada, P.E.
   (Submitted under NOA # 04-0622.07)
5. Test reports on 1) Large Missile Impact Test per FBC, TAS 201-94
   2) Cyclic Wind Pressure Loading per FBC, TAS 203-94

   along with marked-up drawings and installation diagram of an aluminum sliding glass door, prepared by Fenestration Testing Laboratory, Inc., Test Report No. FTL-4163, dated 03/25/04, signed and sealed by Edmundo Largespada, P.E.
   (Submitted under NOA # 04-0622.07)

C. CALCULATIONS

1. Anchor Calculations and structural analysis, complying with FBC-2004, prepared by manufacturer, dated 5/12/06, signed and sealed by Lucas A. Turner, P.E.
   Complies with ASTM E1300-98/02
2. Anchor Calculations, and structural analysis, dated 05/23/05, and last revised on 07/22/05, prepared, signed and sealed by Lucas A. Turner, P.E.,
3. Anchor Calculations and structural analysis, complying with FBC-2004, prepared by PGT Engineering, dated 06/17/04, signed and sealed by Lucas A. Turner, P.E.
   (Submitted under NOA # 04-0622.07)
4. Revised Anchor Calculations, and structural analysis, prepared by PGT Engineering, dated 10/08/04, signed and sealed by Lucas A. Turner, P.E.
   (Submitted under NOA # 04-0622.07)

D. QUALITY ASSURANCE

1. Miami Dade Building Code Compliance Office (BCCO).

Manuel Perez, P.E.
Product Control Examiner
NOA No 06-0523.03
Expiration Date: November 11, 2009
Approval Date: August 3, 2006

NOTICE OF ACCEPTANCE: EVIDENCE SUBMITTED

E. MATERIAL CERTIFICATIONS

1. Notice of Acceptance No. **01-1204.01** issued to E.I. DuPont DeNemours, for "Sentry Glass ® Plus" dated 1/17/02, expiring on 1/14/07
2. Notice of Acceptance No. **01-0205.02** issued to Solutia, Inc. for "Saflex/Keepsafe Maximum" dated 05/17/01, expiring on 05/21/06.
3. Notice of Acceptance No. **00-1212.04**, issued to E.I. DuPont DeNemours for their "Dupont Butacite ® PVB", approved on 02/15/01 and expiring on 12/11/05.

F. STATEMENTS

1. Statement letters of conformance and "No financial interest", both dated 05/23/05, signed and sealed by Lucas A. Turner, P.E.

G. OTHER

1. Notice of Acceptance No. **05-0526.05**, issued to PGT Industries, Inc. for their Seriers "SGD-730 Aluminum Sliding Glass Door, approved on 08/25/05 and expiring on 11/11/09.

Manuel Perez, P.E.
Product Control Examiner
NOA No 06-0523.03
Expiration Date: November 11, 2009
Approval Date: August 3, 2006

GENERAL NOTES: IMPACT SLIDING GLASS DOOR

1. GLAZING OPTIONS: (SEE DETAILS ON SHEET 2)

   A. 7/16" LAMI CONSISTING OF (1) LITE OF 3/16" ANNEALED GLASS AND (1) LITE OF 3/16" HEAT STRENGTHENED GLASS WITH AN .090 SENTRYGLAS PLUS (SGP) INTERLAYER. TEST REPORTS FTL-4159 AND FTL-4161.

   B. 7/16" LAMI CONSISTING OF (2) LITES OF 3/16" HEAT STRENGTHENED GLASS WITH AN .090 SENTRYGLAS PLUS (SGP) INTERLAYER. TEST REPORT FTL-4163.

   C. 7/16" LAMI CONSISTING OF (1) LITE OF 3/16" ANNEALED GLASS AND (1) LITE OF 3/16" HEAT STRENGTHENED GLASS WITH AN .090 PVB INTERLAYER OF DUPONT BUTACITE OR SAFLEX/KEEPSAFE MAXIMUM PVB. TEST REPORT FTL-4171.

   D. 7/16" LAMI CONSISTING OF (2) LITES OF 3/16" HEAT STRENGTHENED GLASS WITH AN .090 PVB INTERLAYER OF DUPONT BUTACITE OR SAFLEX/KEEPSAFE MAXIMUM PVB. TEST REPORT FTL-4171.

   E. 1 1/16" LAMI I.G. CONSISTING OF (1) LITE OF 3/16" TEMPERED GLASS OUTSIDE, 7/16" AIR SPACE AND (1) 7/16" LAMI GLASS ASSEMBLY INSIDE. THE 7/16" LAMI COMPONENT IS ITEM C ABOVE. TEST REPORT FTL-4162.

   F. 1 1/16" LAMI I.G. CONSISTING OF (1) LITE OF 3/16" TEMPERED GLASS OUTSIDE, 7/16" AIR SPACE AND (1) 7/16" LAMI GLASS ASSEMBLY INSIDE. THE 7/16" LAMI COMPONENT IS ITEM D ABOVE. TEST REPORT FTL-4162.

   G. 9/16" LAMI CONSISTING OF (2) LITES OF 1/4" HEAT STRENGTHENED GLASS WITH AN .090 SENTRYGLAS PLUS (SGP) INTERLAYER. TEST REPORT FTL-4163.

2. CONFIGURATIONS: SEE DIMENSIONS SHEET 4 AND DIAGRAMS SHEET 5.

3. DESIGN PRESSURES: (SEE TABLES 1 THROUGH 6, SHEET 3)

   A. NEGATIVE DESIGN LOADS BASED ON TESTED PRESSURE AND GLASS TABLES ASTM E 1300-98.

   B. POSITIVE DESIGN LOADS BASED ON WATER TEST PRESSURE AND GLASS TABLES ASTM E 1300-98.

   C. DESIGN PRESSURES UNDER 40 PSF NOT APPLICABLE IN MIAMI-DADE COUNTY.

4. ANCHORAGE: THE 33 1/3% STRESS INCREASE HAS NOT BEEN USED IN THE DESIGN OF THIS PRODUCT. FOR ANCHORAGE DETAILS SEE SHEETS 14 THROUGH 17.

5. SHUTTERS ARE NOT REQUIRED.

6. INSTALLATION SCREWS, FRAME AND PANEL CORNERS SEALED WITH NARROW JOINT SEALANT.

7. REFERENCE TEST REPORTS: FTL-4159, FTL-4161, FTL-4162, FTL-4163, FTL-4171, FTL-4454 AND FTL-4524.

8. SERIES/MODEL DESIGNATION SGD730, 2-TRACK VERSION ALSO PREVIOUSLY REFERRED TO AS SGD70.

NOA DRAWING MAP

	SHEET
GENERAL NOTES	1
GLAZING DETAILS	2
DESIGN PRESSURES	3
ELEVATIONS	4
CONFIGURATIONS	5
VERT. SECTIONS	6-8
HORIZ. SECTIONS	9-10
PARTS LIST	11
EXTRUSIONS	12-13
ANCHORAGE	14-17

PRODUCT REVISED
as complying with the Florida Building Code
Acceptance No. 06-0523.03
Expiration Date NOV. 11, 2009
By Manuel Perez
Miami-Dade Product Control Division

5/18/06

Lucas A. Turner, P.E.
PE #58201
Mechanical

Revsd By:	Date:	Revisions:	
F.K.	4/12/06	E	NO CHANGE THIS SHEET
F.K.	4/5/05	D	REVISION ADDS ALT. TRACK OPTIONS. REVISE NOTES 2, 4, 6, 7 & 8.
F.K.	10/7/04	C	ADD GLASS TYPE G, 9/16" LAMI
Drawn By: F.K.	Date: 6/18/04	Checked By: J.J.	Date: 4/15/05

1070 TECHNOLOGY DRIVE
NOKOMIS, FL 34275

P.O. BOX 1529
NOKOMIS, FL 34274

PGT Visibly Better

Description: GENERAL NOTES AND MAP

Title: ALUM. SLIDING GLASS DOOR, IMPACT

Series/Model:	Scale:	Sheet:	Drawing No.	Rev:
SGD730	NTS	1 of 17	4406-1	E

EXTERIOR INTERIOR
(ALL SECTIONS)

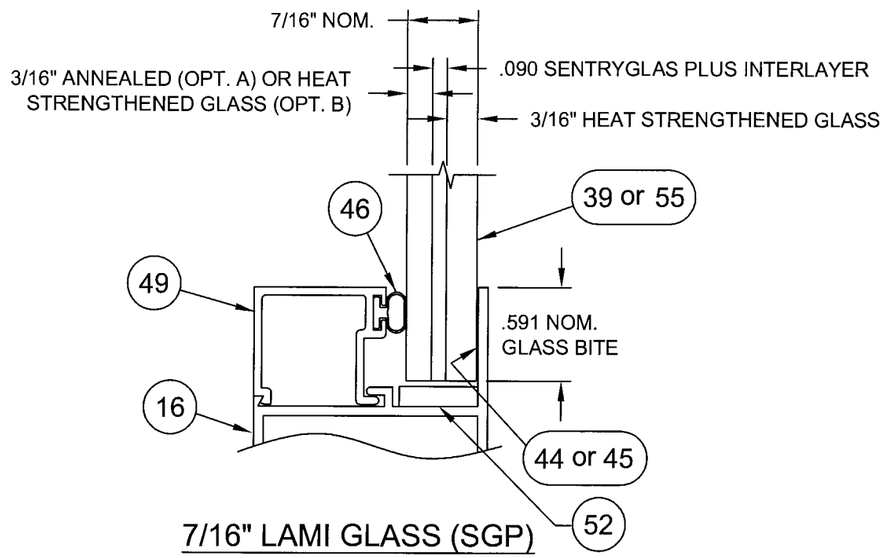

7/16" LAMI GLASS (SGP)
GLAZING OPTIONS A & B

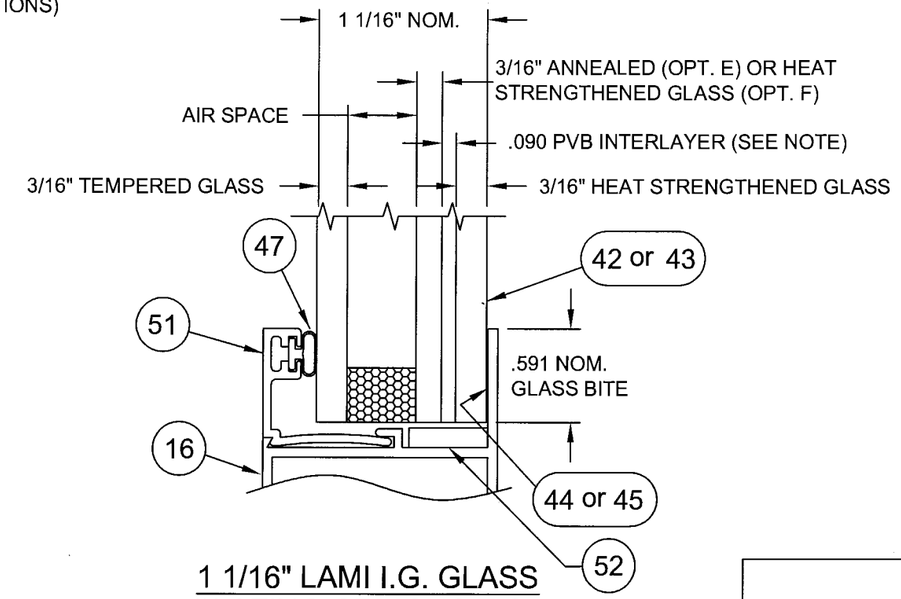

1 1/16" LAMI I.G. GLASS
GLAZING OPTIONS E & F

NOTE: PVB INTERLAYER IS DUPONT BUTACITE OR SAFLEX/KEEPSAFE MAXIMUM.

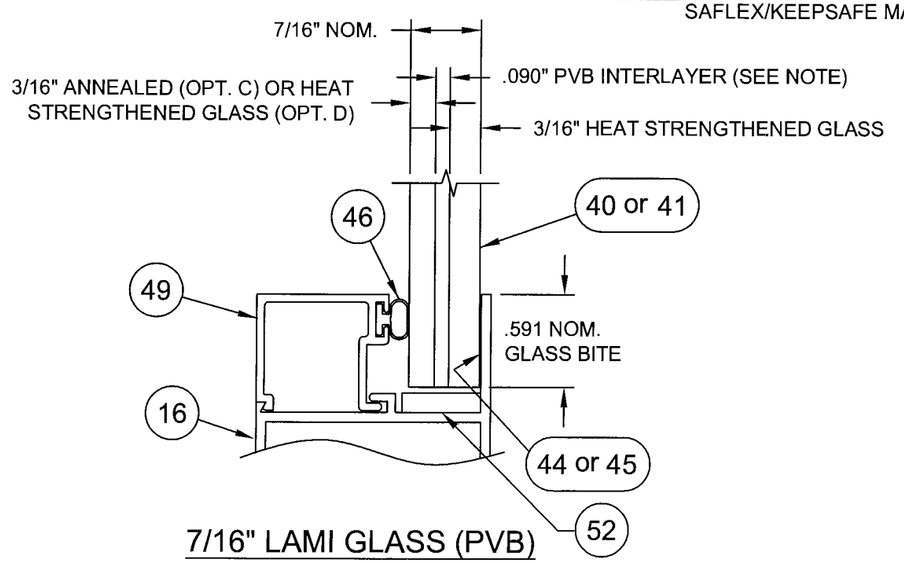

7/16" LAMI GLASS (PVB)
GLAZING OPTIONS C & D

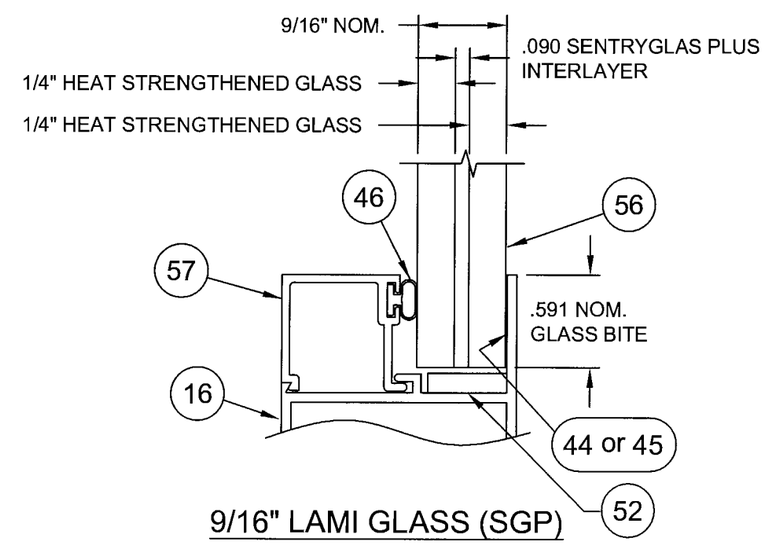

9/16" LAMI GLASS (SGP)
GLAZING OPTION G

PRODUCT REVISED
as complying with the Florida Building Code
Acceptance No. 06-0523.03
Expiration Date Nov. 11, 2009
By Manuel Perez
Miami Dade Product Control Division

2 of 2
5/18/06

Revsd By:	Date:	Revisions:	
F.K.	4/12/06	E	NO CHANGE THIS SHEET
F.K.	4/5/05	D	REMOVE LAMI I.G. AIR SPACE DIM.
F.K.	10/7/04	C	ADD GLASS TYPE G, 9/16" LAMI
Drawn By: F.K.	Date: 6/18/04	Checked By: J.J.	Date: 4/15/05

1070 TECHNOLOGY DRIVE
NOKOMIS, FL 34275

P.O. BOX 1529
NOKOMIS, FL 34274

PGT
Visibly Better

Description: GLAZING DETAILS

Title: ALUM. SLIDING GLASS DOOR, IMPACT

Series/Model:	Scale:	Sheet:	Drawing No.	Rev:
SGD730	FULL	2 of 17	4406-1	E

Lucas A. Turner, P.E.
PE #58201
Mechanical

EXTENDED SILL (3 1/2"), MAX. 96" **(8^0)** HIGH DOOR. **TABLE 1.**

ALL CONFIGURATIONS WITH A MAX. NOM. PANEL WIDTH OF 60" **(5^0)**

GLASS TYPE A. 7/16" LAMI (3/16" ANN.,.090 SGP, 3/16" HS) FTL-4159

Nom. Panel Width	Door Height									
	72" (6^0)		80" (6^8)		84" (7^0)		90" (7^6)		96" (8^0)	
30" (2^6)	+70.0	-70.0	+70.0	-70.0	+70.0	-70.0	+70.0	-70.0	+70.0	-70.0
36" (3^0)	+70.0	-70.0	+70.0	-70.0	+70.0	-70.0	+66.8	-66.8	+64.8	-64.8
42" (3^6)	+62.6	-62.6	+56.7	-56.7	+53.9	-53.9	+50.7	-50.7	+48.2	-48.2
48" (4^0)	+53.2	-53.2	+47.2	-47.2	+44.4	-44.4	+42.3	-42.3	+40.6	-40.6
54" (4^6)	+46.2	-46.2	+41.3	-41.3	+39.4	-39.4	+37.1	-37.1	+34.6	-34.6
60" (5^0)	+41.7	-41.7	+37.6	-37.6	+35.8	-35.8	+33.1	-33.1	+30.9	-30.9

EXTENDED SILL (3 1/2"), MAX. 96" **(8^0)** HIGH DOOR. **TABLE 2.**

ALL CONFIGURATIONS WITH A MAX. NOM. PANEL WIDTH OF 60" **(5^0)**

GLASS TYPE B. 7/16" LAMI (3/16" HS,.090 SGP, 3/16" HS) FTL-4163

Nom. Panel Width	Door Height									
	72" (6^0)		80" (6^8)		84" (7^0)		90" (7^6)		96" (8^0)	
48" ($4^{0)}$	+70.0	-70.0	+70.0	-70.0	+70.0	-70.0	+70.0	-70.0	+70.0	-70.0
54" (4^6)	+70.0	-70.0	+70.0	-70.0	+70.0	-70.0	+70.0	-70.0	+69.1	-69.1
60" (5^0)	+70.0	-70.0	+70.0	-70.0	+70.0	-70.0	+66.2	-66.2	+61.8	-61.8

EXTENDED SILL (3 1/2"), MAX. 96" **(8^0)** HIGH DOOR. **TABLE 2A.**

ALL SIZES AND CONFIGURATIONS WITH A MAX. NOM. PANEL WIDTH OF 60" **(5^0)**

GLASS TYPE G. 9/16" LAMI (1/4" HS,.090 SGP, 1/4" HS) FTL-4163 | +70.0 | -70.0

EXTENDED SILL (3 1/2"), MAX. 120" **(10^0)** HIGH DOOR. **TABLE 3.**

ALL CONFIGURATIONS WITH A MAX. NOM. PANEL WIDTH OF 48" **(4^0)**

GLASS TYPE A. 7/16" LAMI (3/16" ANN.,.090 SGP, 3/16" HS) FTL-4161

Nom. Panel Width	Door Height																	
	72" (6^0)		80" (6^8)		84" (7^0)		90" (7^6)		96" (8^0)		102" (8^6)		108" (9^0)		114" (9^6)		120" (10^0)	
30" (2^6)	+60.0	-60.0	+60.0	-60.0	+60.0	-60.0	+60.0	-60.0	+60.0	-60.0	+60.0	-60.0	+60.0	-60.0	+60.0	-60.0	+60.0	-60.0
36" (3^0)	+60.0	-60.0	+60.0	-60.0	+60.0	-60.0	+60.0	-60.0	+60.0	-60.0	+60.0	-60.0	+60.0	-60.0	+58.9	-58.9	+58.2	-58.2
42" (3^6)	+60.0	-60.0	+56.7	-56.7	+53.9	-53.9	+50.7	-50.7	+48.2	-48.2	+46.3	-46.3	+44.6	-44.6	+43.4	-43.4	+42.1	-42.1
48" (4^0)	+53.2	-53.2	+47.2	-47.2	+44.4	-44.4	+42.3	-42.3	+40.6	-40.6	+38.3	-38.3	+36.0	-36.0	+34.4	-34.4	+33.1	-33.1

EXTENDED SILL (3 1/2"), MAX. 96" **(8^0)** HIGH DOOR. **TABLE 5.**

ALL CONFIGURATIONS WITH A MAX. NOM. PANEL WIDTH OF 48" **(4^0)**

GLASS TYPE C. 7/16" LAMI (3/16" ANN.,.090 PVB, 3/16" HS) FTL-4171

GLASS TYPE E. 1 1/16" LAMI I.G W/ 7/16" LAMI TYPE C. FTL-4162

(3/16" TEMP., 7/16" AIR SPACE, 3/16" ANN.,.090 PVB, 3/16" HS)

Nom. Panel Width	Door Height									
	72" (6^0)		80" (6^8)		84" (7^0)		90" (7^6)		96" (8^0)	
30" (2^6)	+80.0	-80.0	+80.0	-80.0	+80.0	-80.0	+80.0	-80.0	+80.0	-80.0
36" (3^0)	+76.6	-76.6	+72.7	-72.7	+70.6	-70.6	+66.8	-66.8	+64.8	-64.8
42" (3^6)	+62.6	-62.6	+56.7	-56.7	+53.9	-53.9	+50.7	-50.7	+48.2	-48.2
48" (4^0)	+53.2	-53.2	+47.2	-47.2	+44.4	-44.4	+42.3	-42.3	+40.6	-40.6

EXTENDED SILL (3 1/2"), MAX. 96" **(8^0)** HIGH DOOR. **TABLE 6.**

ALL SIZES AND CONFIGURATIONS WITH A MAX. NOM. PANEL WIDTH OF 48" **(4^0)**

GLASS TYPE D. 7/16" LAMI (3/16" HS,.090 PVB, 3/16" HS) FTL-4171 | +80.0 | -80.0

GLASS TYPE F. 1 1/16" LAMI I.G W/ 7/16" LAMI TYPE D. FTL-4162 | +80.0 | -80.0

(3/16" TEMP., 7/16" AIR SPACE, 3/16" HS,.090 PVB, 3/16" HS)

EXTENDED SILL (3 1/2"), MAX. 120" **(10^0)** HIGH DOOR. **TABLE 4.**

ALL SIZES AND CONFIGURATIONS WITH A MAX. NOM. PANEL WIDTH OF 48" **(4^0)**

GLASS TYPE B. 7/16" LAMI (3/16" HS,.090 SGP, 3/16" HS) FTL-4161 | +60.0 | -60.0

PRODUCT REVISED
as complying with the Florida
Building Code
Acceptance No. 06-0523.03
Expiration Date NOV. 11, 2009
By Manuel Perez
Miami Dade Product Control
Division

NOTES:

1. POSITIVE DESIGN PRESSURE IS LIMITED TO +40.0 PSF FOR ALL SIZES AND CONFIGURATIONS NOT EQUIPPED WITH 3 1/2" EXTENDED SILL RISER. NEGATIVE PRESSURES ARE NOT CHANGED. SEE VERTICAL SECTIONS, SHEETS 6 THROUGH 8 FOR EXACT SILL HEIGHTS.

2. REINFORCEMENTS NOT REQUIRED IN DOOR PANELS WITH GLASS TYPES C, D, E AND F (TABLES 5 AND 6). REINFORCEMENTS ARE REQUIRED IN DOOR PANELS WITH GLASS TYPES A, B AND G (TABLES 1, 2, 2A, 3 AND 4).

Revsd By:	Date:	Revisions:	
F.K.	4/12/06	E	NO CHANGE THIS SHEET
F.K.	4/5/05	D	REVISE NOTE 1
F.K.	10/7/04	C	ADD TABLE 2A, 9/16" LAMI
Drawn By: F.K.	Date: 6/18/04	Checked By: J.J.	Date: 4/15/05

1070 TECHNOLOGY DRIVE
NOKOMIS, FL 34275

P.O. BOX 1529
NOKOMIS, FL 34274

PGT Visibly Better

Description: DESIGN PRESSURES

Title: ALUM. SLIDING GLASS DOOR, IMPACT

Series/Model:	Scale:	Sheet:	Drawing No.	Rev:
SGD730	FULL	3 of 17	4406-1	E

2 of 2
5/18/06

Lucas A. Turner, P.E.
PE #58201
Mechanical

CONFIGURATION OVERALL WIDTH IN INCHES					
			MAX. NOM. PANEL WIDTH >	48"	60"
			MAX. HEIGHT >	120"	96"
#	CONFIGURATION	PANELS	TRACKS	WIDTH	WIDTH
1	Xp OR pX	1	2	49 1/8	61 1/8
2	OX or XO BY-PASS	2	2	96 13/16	120 13/16
3	pXXp	2	2	101 1/8	125 1/8
4	XX BY-PASS	2	2	96 13/16	120 13/16
5	pXX or XXp	2	2	96 1/4	120 1/4
6	XOX BY-PASS	3	2	144	180
7	OOO	3	2	144	180
8	OXO BY-PASS	3	2	149 3/8	185 3/8
9	pXXO or OXXp	3	2	148 13/16	184 13/16
10	OXX or XXO BY-PASS	3	2	149 3/8	185 3/8
11	OOX or XOO BY-PASS	3	3	144	180
12	OXX or XXO BY-PASS	3	3	144	180
13	XXX BY-PASS	3	3	144	180
14	pXXX or XXXp	3	3	143 7/16	179 7/16
15	OXX or XXO BY-PASS	3	2	149 3/8	185 3/8
16	OOOO	4	2	196 9/16	244 9/16
17	OXXO BY-PASS	4	2	196 9/16	244 9/16
18	OXXXp or pXXXO	4	2	196	244
19	pXXXX or XXXXp BY-PASS	4	2	196	244
20	XXXX BY-PASS	4	2	196 9/16	244 9/16
21	pXXXXp	4	2	195 1/2	243 1/2
22	OOOX or XOOO BY-PASS	4	4	191 3/16	239 3/16
23	OOXX or XXOO BY-PASS	4	4	191 3/16	239 3/16
24	OXXX or XXXO BY-PASS	4	4	191 3/16	239 3/16
25	XXXX BY-PASS	4	4	191 3/16	239 3/16
26	pXXXX or XXXXp	4	4	190 5/8	238 5/8
27	XXXXX BY-PASS	5	3	243 3/4	303 3/4
28	pXXXXXXp	6	3	289 13/16	361 13/16
29	XXXXXX BY-PASS	6	3	290 15/16	362 15/16
30	pXXXXXXXXp	8	4	384 3/16	480 3/16
31	XXXXXXXX	8	4	385 1/4	481 1/4

TABLE 8. (LOWER CASE p REPRESENTS POCKET INSTEAD OF JAMB)

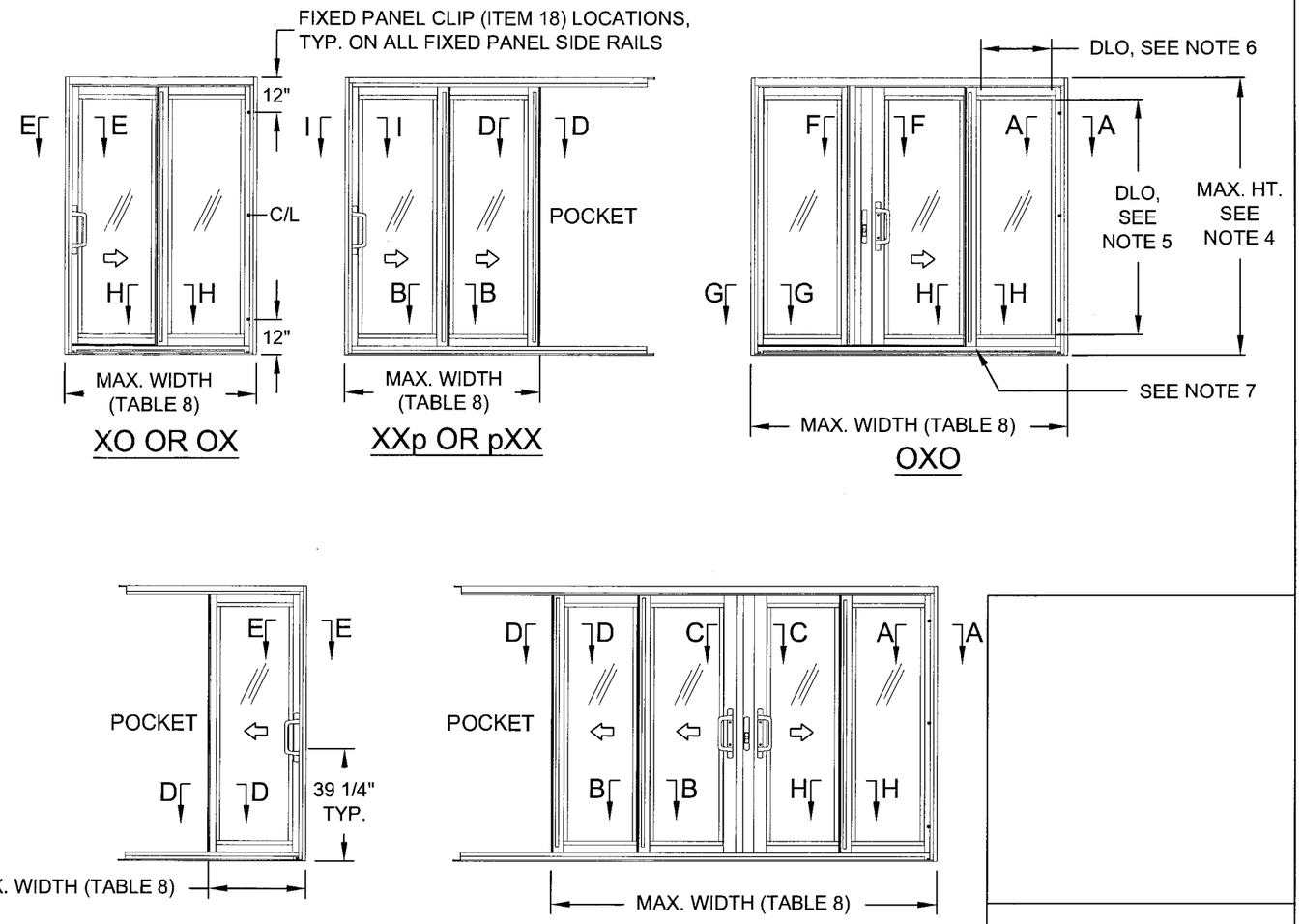

NOTES:

1. FOR VERTICAL SECTION DETAILS SEE SHEETS 6, 7 AND 8. FOR HORIZONTAL SECTION DETAILS SEE SHEETS 9 AND 10.
2. FOR APPROVED CONFIGURATIONS SEE SHEET 5.
3. FOR ANCHORAGE DETAILS SEE SHEETS 14 THROUGH 17.
4. MAXIMUM HEIGHT FOR DOORS WITH UP TO 4 FT. (48") WIDE PANELS IS 10 FT. (120"). MAXIMUM HEIGHT FOR DOORS WITH UP TO 5 FT. (60") WIDE PANELS IS 8 FT. (96"). SEE TABLE 8 FOR OVERALL WIDTHS OF APPROVED CONFIGURATIONS.
5. VERTICAL DAYLIGHT OPENING FOR 10 FT. HIGH (120") DOORS IS 112 3/4" MAX. AND FOR 8 FT. HIGH (96") DOORS IS 88 3/4" MAX. (DOOR HEIGHT - 7 1/4").
6. HORIZONTAL DAYLIGHT OPENING FOR 5 FT. (60") WIDE PANELS IS 55 7/16" MAX. AND FOR 4 FT. (48") WIDE PANELS IS 43 7/16" MAX. (NOM. WIDTH - 4 9/16").
7. FIXED PANEL ANGLE BRACKETS (ITEM 54) LOCATED AT THE HEAD AND SILL OF ALL FIXED PANEL INTERLOCKS, SEE SHEET 10 FOR DETAIL VIEW.

PRODUCT REVISED
as complying with the Florida Building Code
Acceptance No. 06-0523.03
Expiration Date NOV. 11, 2009
By Manuel Perez
Miami-Dade Product Control Division

5/18/06

Revsd By:	Date:	Revisions:	
F.K.	4/12/06	E	NO CHANGE THIS SHEET
F.K.	4/5/05	D	REDRAW TO COMBINE 4 FT & 5 FT SHEETS. REVISE NOTES AS REQUIRED.
F.K.	10/7/04	C	NO CHANGE THIS SHEET
Drawn By: F.K.	Date: 6/18/04	Checked By: J.J.	Date: 4/15/05

1070 TECHNOLOGY DRIVE
NOKOMIS, FL 34275

P.O. BOX 1529
NOKOMIS, FL 34274

PGT
Visibly Better

Description: EXAMPLE ELEVATIONS & CONFIGURATION DIMENSIONS

Title: ALUM. SLIDING GLASS DOOR, IMPACT

Series/Model:	Scale:	Sheet:	Drawing No.	Rev:
SGD730	NTS	4 of 17	4406-1	E

Lucas A. Turner, P.E.
PE #58201
Mechanical

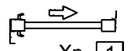

Xp [1]
1 PANEL 2 TRACK SINGLE POCKET

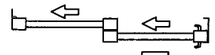

pXX [5]
2 PANEL 2 TRACK SINGLE POCKET

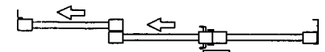

pXXO [9]
3 PANEL 2 TRACK SINGLE POCKET

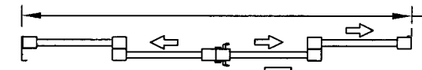

OVERALL WIDTH, SEE TABLE 8, SHT. 4

OXXXp [18]
4 PANEL 2 TRACK BY-PASS / SINGLE POCKET

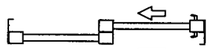

OX [2]
2 PANEL 2 TRACK BY-PASS

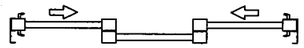

XOX [6]
3 PANEL 2 TRACK BY-PASS

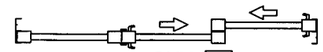

OXX [10]
3 PANEL 2 TRACK BY-PASS

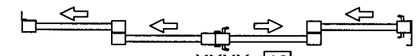

pXXXX [19]
4 PANEL 2 TRACK SINGLE POCKET / BY-PASS

INTERIOR
(ALL CONFIGURATIONS)
EXTERIOR

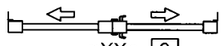

pXXp [3]
2 PANEL 2 TRACK DOUBLE POCKET

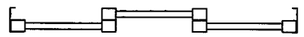

OOO [7]
3 PANEL 2 TRACK FIXED

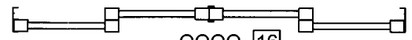

OOOO [16]
4 PANEL 2 TRACK FIXED

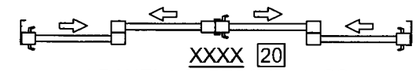

XXXX [20]
4 PANEL 2 TRACK BY-PASS

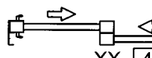

XX [4]
2 PANEL 2 TRACK BY-PASS

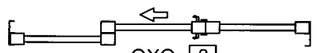

OXO [8]
3 PANEL 2 TRACK BY-PASS

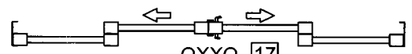

OXXO [17]
4 PANEL 2 TRACK BY-PASS

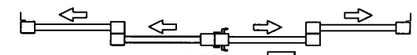

pXXXXp [21]
4 PANEL 2 TRACK DOUBLE POCKET

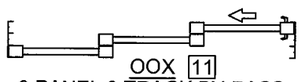

OOX [11]
3 PANEL 3 TRACK BY-PASS

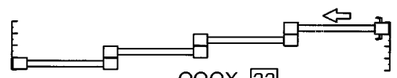

OOOX [22]
4 PANEL 4 TRACK BY-PASS

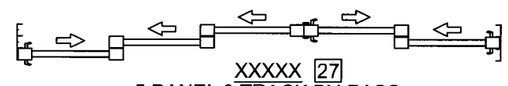

XXXXX [27]
5 PANEL 3 TRACK BY-PASS

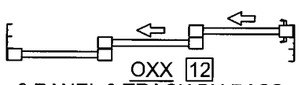

OXX [12]
3 PANEL 3 TRACK BY-PASS

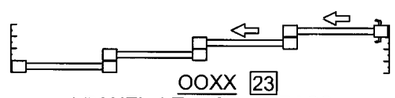

OOXX [23]
4 PANEL 4 TRACK BY-PASS

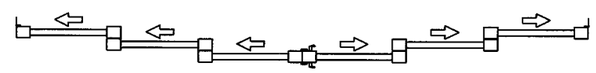

pXXXXXXp [28]
6 PANEL 3 TRACK DOUBLE POCKET

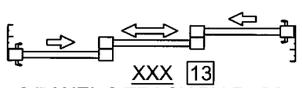

XXX [13]
3 PANEL 3 TRACK BY-PASS

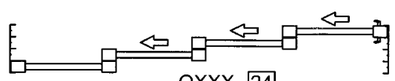

OXXX [24]
4 PANEL 4 TRACK BY-PASS

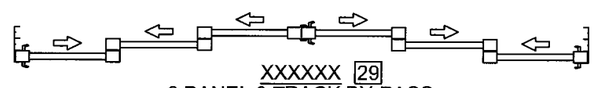

XXXXXX [29]
6 PANEL 3 TRACK BY-PASS

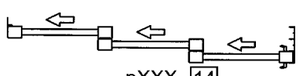

pXXX [14]
3 PANEL 3 TRACK SINGLE POCKET

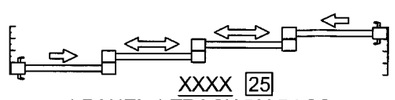

XXXX [25]
4 PANEL 4 TRACK BY-PASS

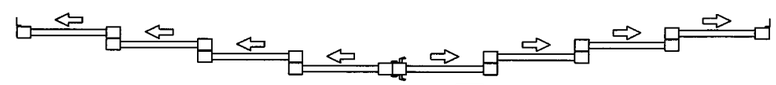

pXXXXXXXXp [30]
8 PANEL 4 TRACK DOUBLE POCKET

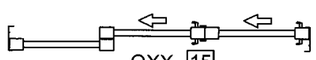

OXX [15]
3 PANEL 2 TRACK BY-PASS

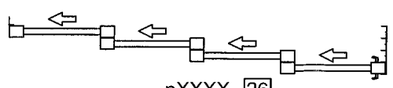

pXXXX [26]
4 PANEL 4 TRACK SINGLE POCKET

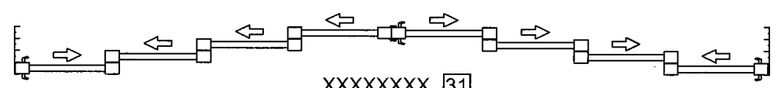

XXXXXXXX [31]
8 PANEL 4 TRACK BY-PASS

PRODUCT REVISED
as complying with the Florida
Building Code
Acceptance No. 06-0523.03
Expiration Date: NOV. 11, 2009
By: Manuel Perez
Miami-Dade Product Control
Division

Z of I
5/18/06

Revsd By:	Date:	Revisions:	
F.K.	4/12/06	E	NO CHANGE THIS SHEET
F.K.	4/5/05	D	REDRAW AND ADD 3 AND 4 TRACK CONFIGURATION OPTIONS
F.K.	10/7/04	C	NO CHANGE THIS SHEET
Drawn By: F.K.	Date: 6/18/04	Checked By: J.J.	Date: 4/15/05

1070 TECHNOLOGY DRIVE
NOKOMIS, FL 34275

P.O. BOX 1529
NOKOMIS, FL 34274

PGT
Visibly Better

Description: EXAMPLE CONFIGURATION DIAGRAMS

Title: ALUM. SLIDING GLASS DOOR, IMPACT

Series/Model:	Scale:	Sheet:	Drawing No.	Rev:
SGD730	NTS	5 of 17	4406-1	E

Lucas A. Turner, P.E.
PE #58201
Mechanical

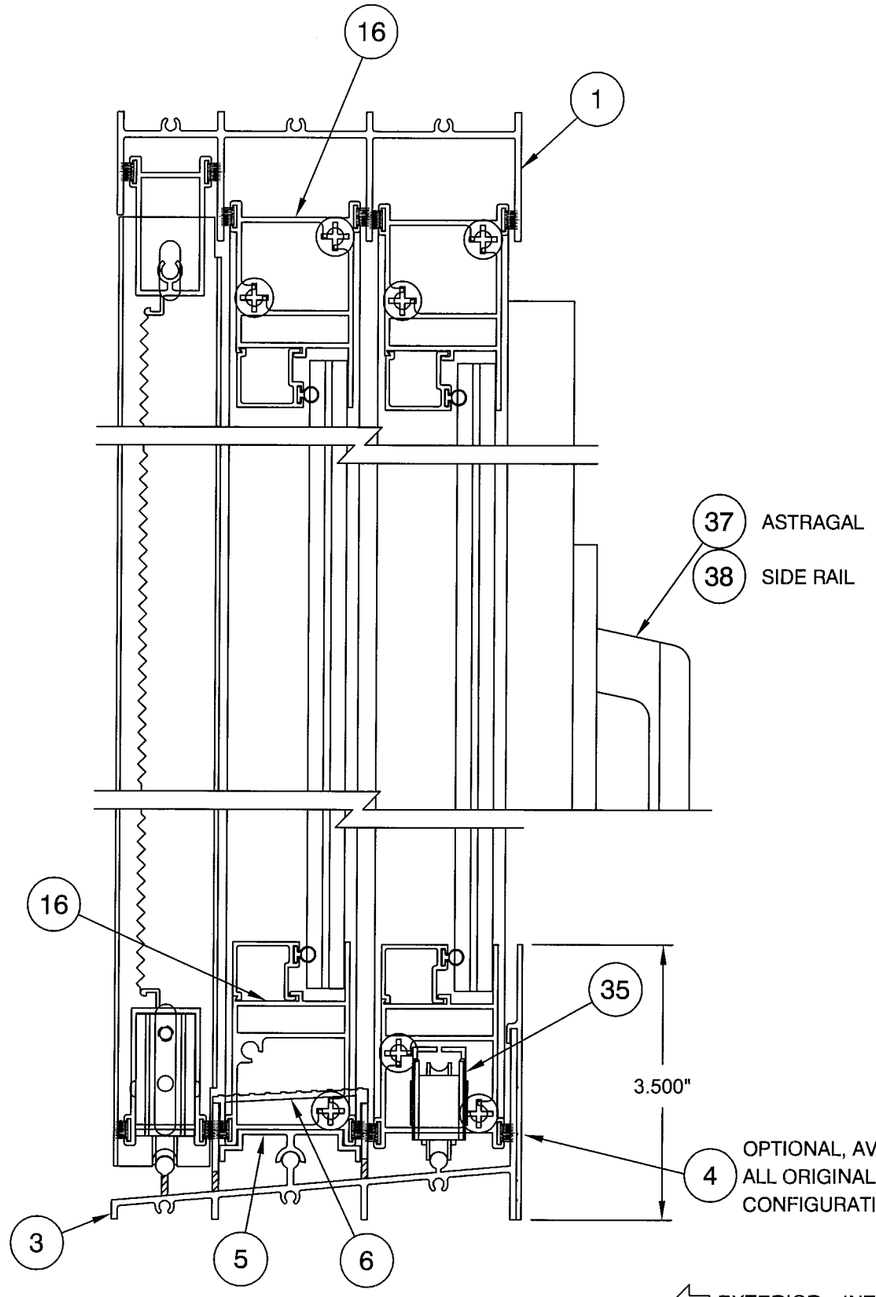

TYP. VERTICAL SECTION SHOWING ONE ACTIVE PANEL AND ONE FIXED PANEL

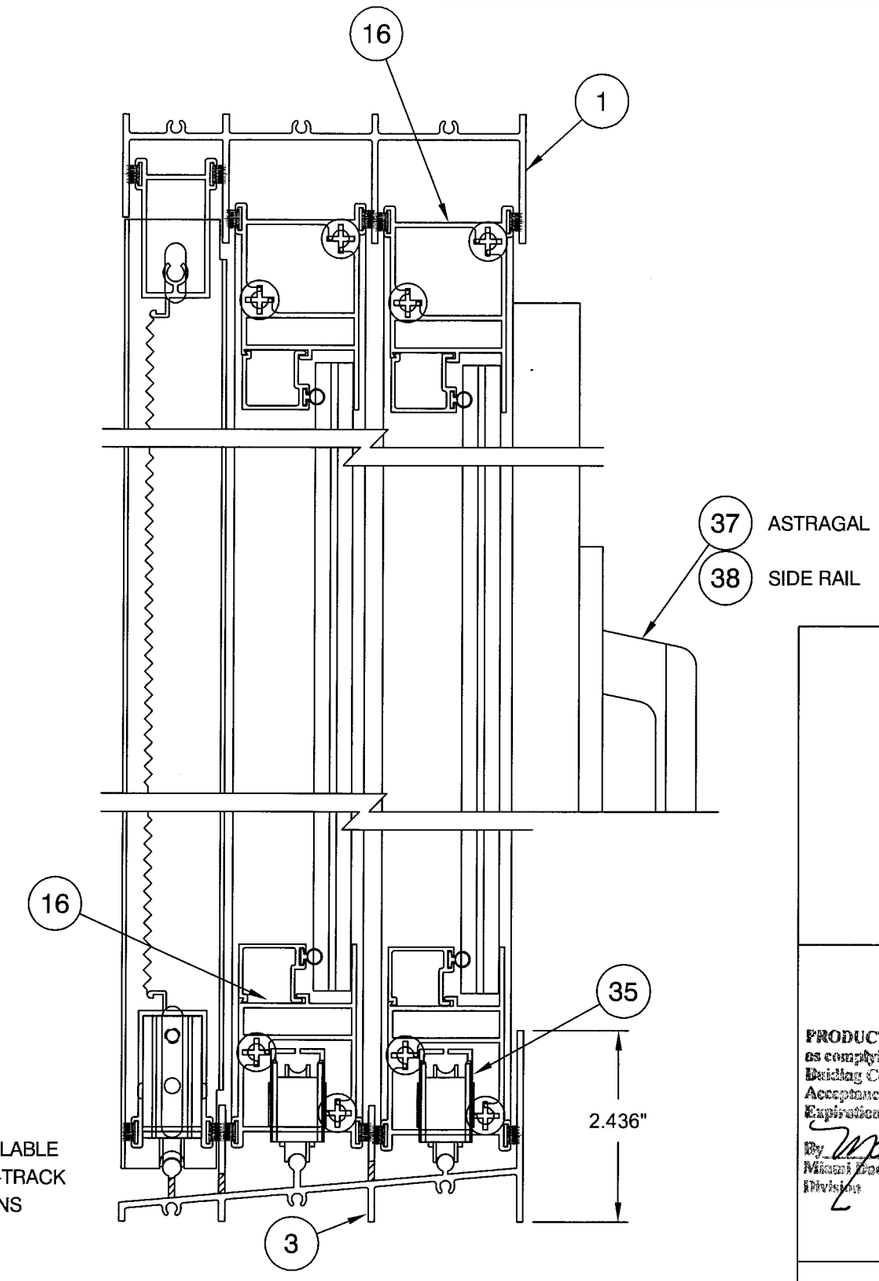

TYP. VERTICAL SECTION SHOWING TWO ACTIVE PANELS

EXTERIOR INTERIOR
(ALL SECTIONS)

PRODUCT REVISED
as complying with the Florida Building Code
Acceptance No. 06-0523.03
Expiration Date NOV. 11, 2009
By Manuel Perez
Miami Dade Product Control Division

5/18/06

Revsd By:	Date:	Revisions:	
F.K.	4/12/06	E	NO CHANGE THIS SHEET
F.K.	4/5/05	D	ADD STANDARD AND OPTIONAL SILL RISER HEIGHT DIM.
F.K.	10/7/04	C	NO CHANGE THIS SHEET
Drawn By: F.K.	Date: 6/18/04	Checked By: J.J.	Date: 4/15/05

1070 TECHNOLOGY DRIVE
NOKOMIS, FL 34275

P.O. BOX 1529
NOKOMIS, FL 34274

PGT
Visibly Better

Description: VERTICAL SECTIONS, ORIGINAL 2 TRACK

Title: ALUM. SLIDING GLASS DOOR, IMPACT

Series/Model:	Scale:	Sheet:	Drawing No.	Rev:
SGD730	1/2	6 of 17	4406-1	E

Lucas A. Turner, P.E.
PE #58201
Mechanical

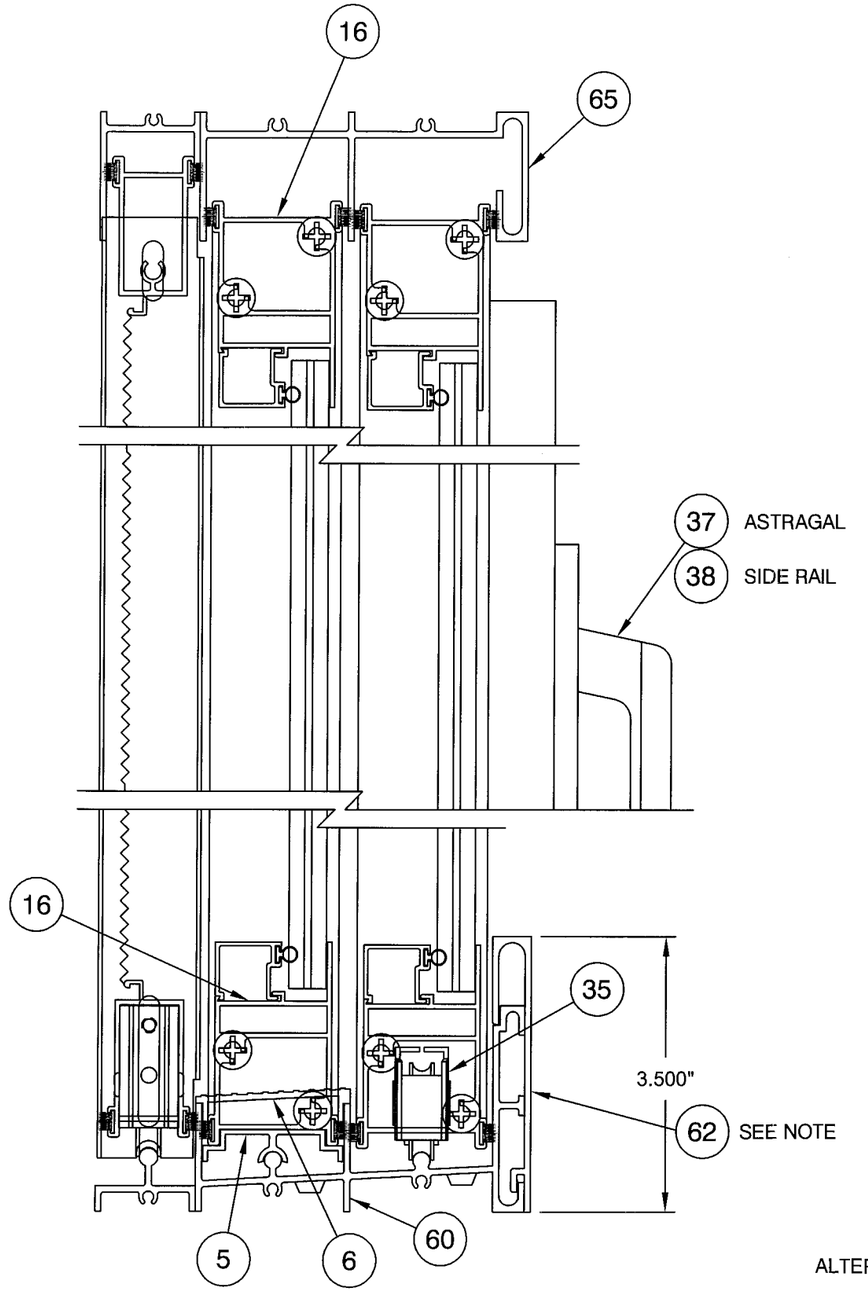

TYP. VERTICAL SECTION SHOWING ONE ACTIVE PANEL AND ONE FIXED PANEL W/ SCREEN

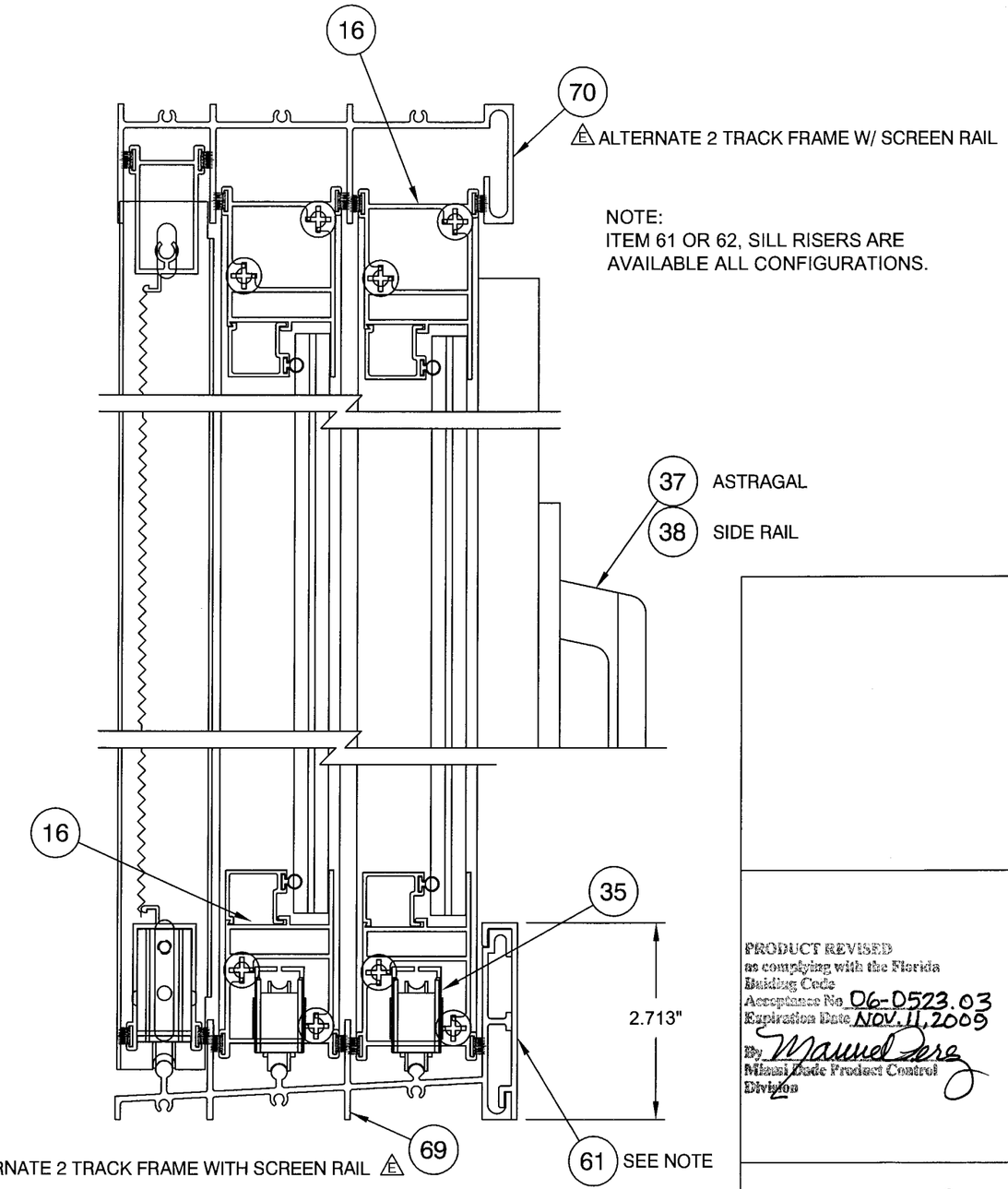

NOTE:
ITEM 61 OR 62, SILL RISERS ARE AVAILABLE ALL CONFIGURATIONS.

ALTERNATE 2 TRACK FRAME WITH SCREEN RAIL E

EXTERIOR INTERIOR
(ALL SECTIONS)

TYP. VERTICAL SECTION SHOWING TWO ACTIVE PANELS W/ SCREEN

PRODUCT REVISED
as complying with the Florida Building Code
Acceptance No. 06-0523.03
Expiration Date NOV. 11, 2009
By Manuel Perez
Miami-Dade Product Control Division

7 of 7
5/18/06

Revsd By:	Date:	Revisions:	
F.K.	4/12/06	E	ADD ITEMS 69 AND 70, ALTERNATE 2 TRACK FRAME W/ SCREEN RAIL
F.K.	4/5/05	D	NEW SHEET ADDED FOR NEW 2 TRACK FRAME
Revsd By:	Date:	Revisions:	
Drawn By: F.K.	Date: 6/18/04	Checked By: J.J.	Date: 4/15/05

1070 TECHNOLOGY DRIVE
NOKOMIS, FL 34275

P.O. BOX 1529
NOKOMIS, FL 34274

PGT
Visibly Better

Description: VERTICAL SECTIONS, 2 TRACK

Title: ALUM. SLIDING GLASS DOOR, IMPACT

Series/Model:	Scale:	Sheet:	Drawing No.	Rev:
SGD730	1/2	7 of 17	4406-1	E

Lucas A. Turner, P.E.
PE #58201

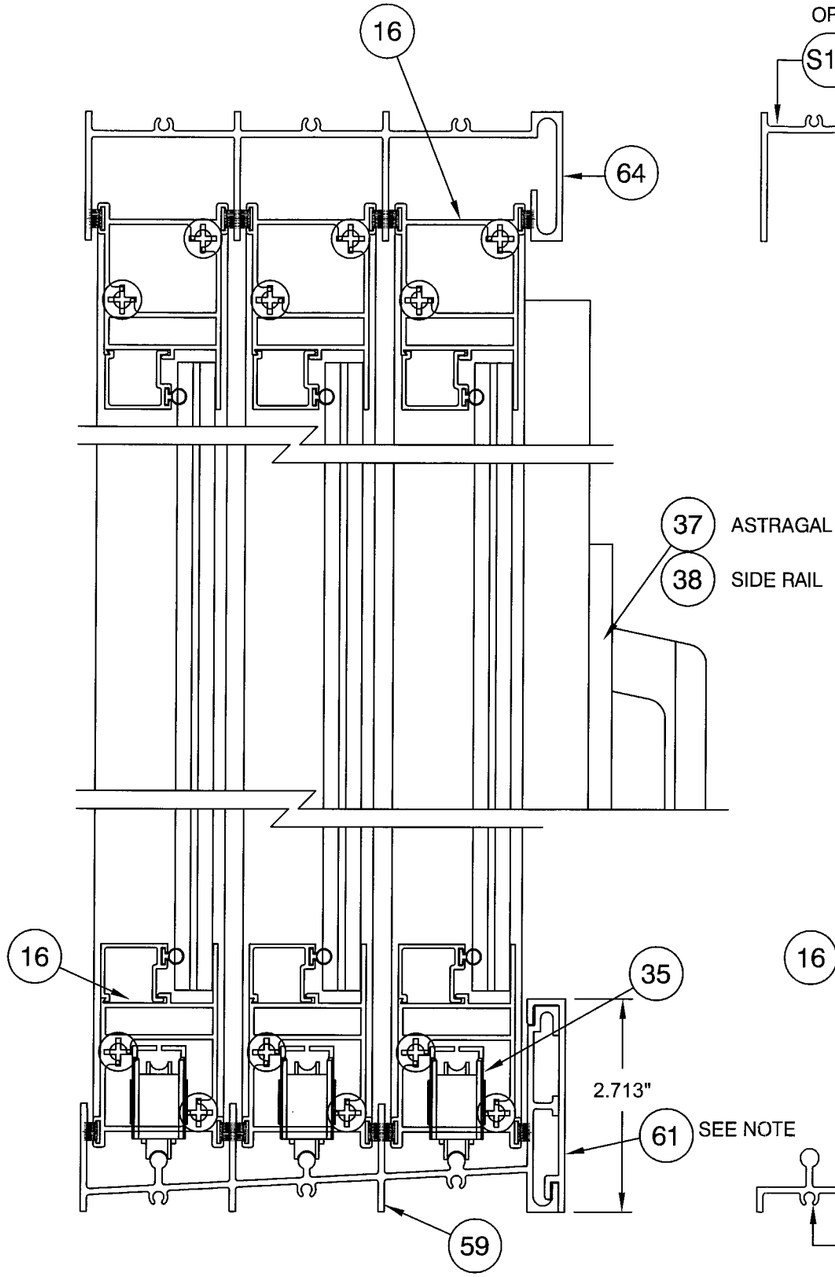

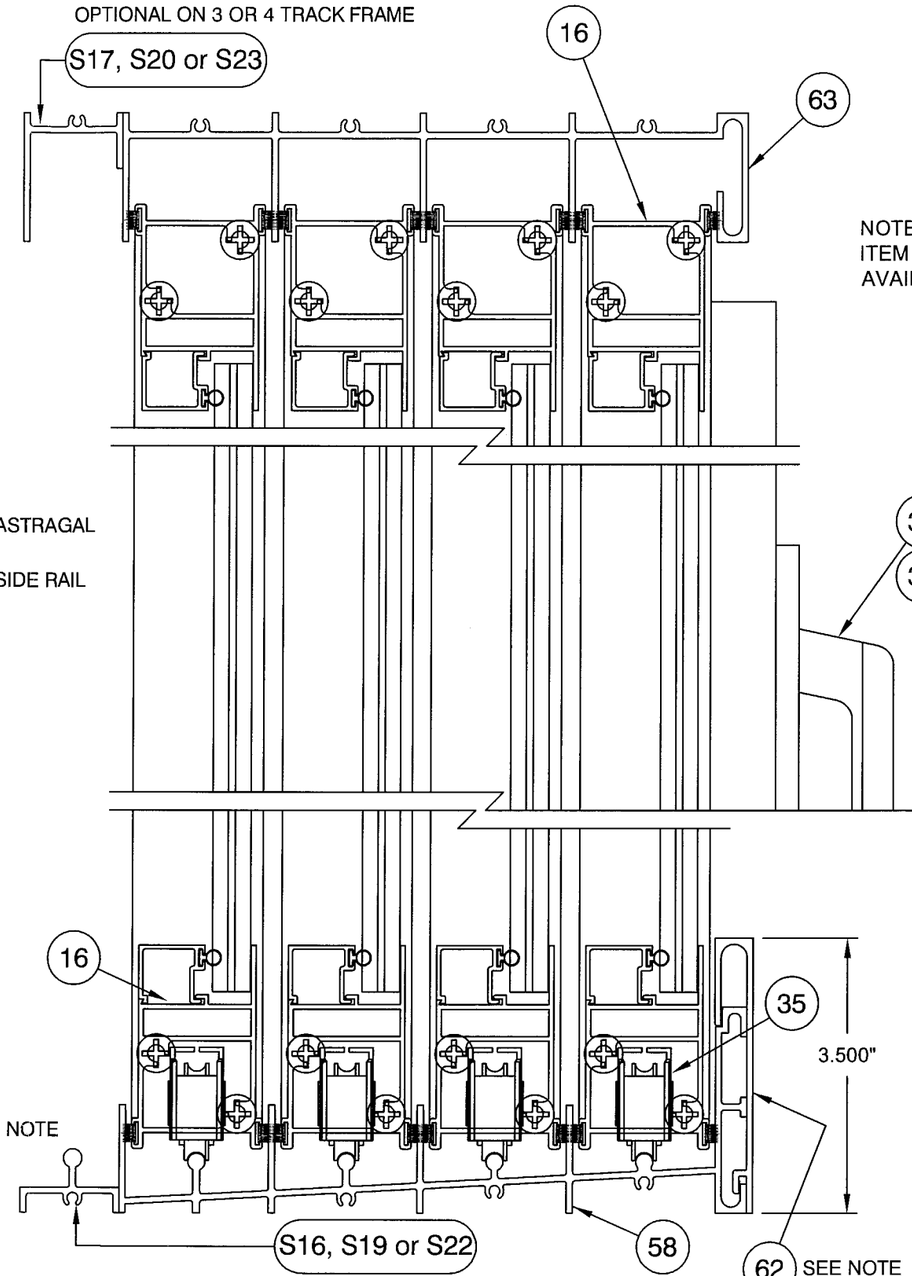

NOTE:
ITEM 61 OR 62, SILL RISERS ARE AVAILABLE ALL CONFIGURATIONS.

EXTERIOR INTERIOR
(ALL SECTIONS)

TYP. VERTICAL SECTION SHOWING THREE ACTIVE PANELS W/O SCREENS

TYP. VERTICAL SECTION SHOWING FOUR ACTIVE PANELS W/ SCREEN TRACK

PRODUCT REVISED
as complying with the Florida
Building Code
Acceptance No. 06-0523.03
Expiration Date Nov. 11, 2005
By Manuel Perez
Miami-Dade Product Control
Division

5/18/06

Revsd By:	Date:	Revisions:	
F.K.	4/12/06	E	NO CHANGE THIS SHEET
F.K.	4/5/05	D	NEW SHEET ADDED FOR 3 AND 4 TRACK FRAME
Revsd By:	Date:	Revisions:	
Drawn By: F.K.	Date: 6/18/04	Checked By: J.J.	Date: 4/15/05

1070 TECHNOLOGY DRIVE
NOKOMIS, FL 34275

P.O. BOX 1529
NOKOMIS, FL 34274

PGT
Visibly Better

Description: VERTICAL SECTIONS, 3 & 4 TRACK

Title: ALUM. SLIDING GLASS DOOR, IMPACT

Series/Model:	Scale:	Sheet:	Drawing No.	Rev:
SGD730	1/2	8 of 17	4406-1	E

Lucas A. Turner, P.E.
PE #58201

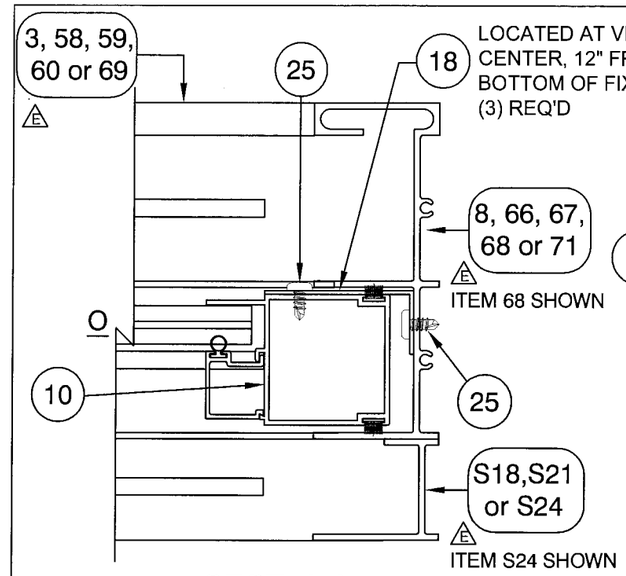

SECT. A-A
FIXED STILE AT JAMB (OUTSIDE)

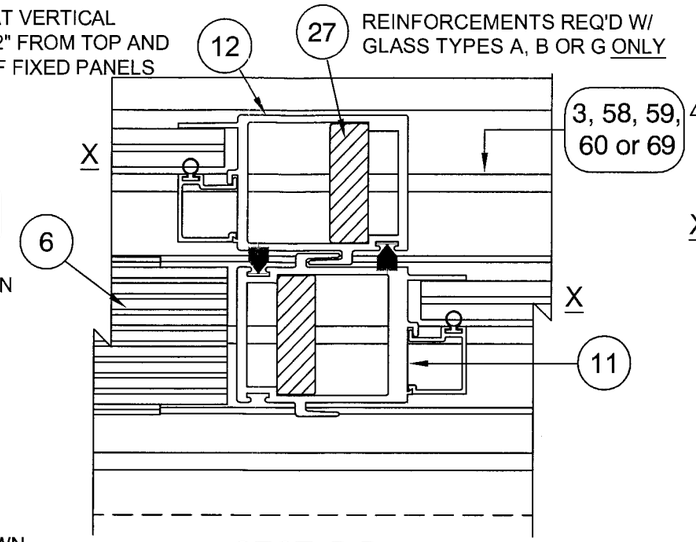

SECT. B-B
DOUBLE & SINGLE INTERLOCK

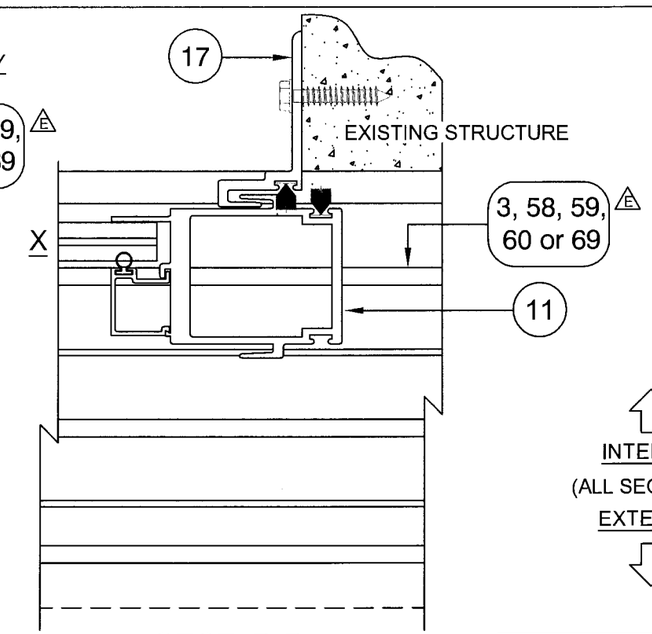

SECT. D-D
MOVABLE INTERLOCK AT P-HOOK

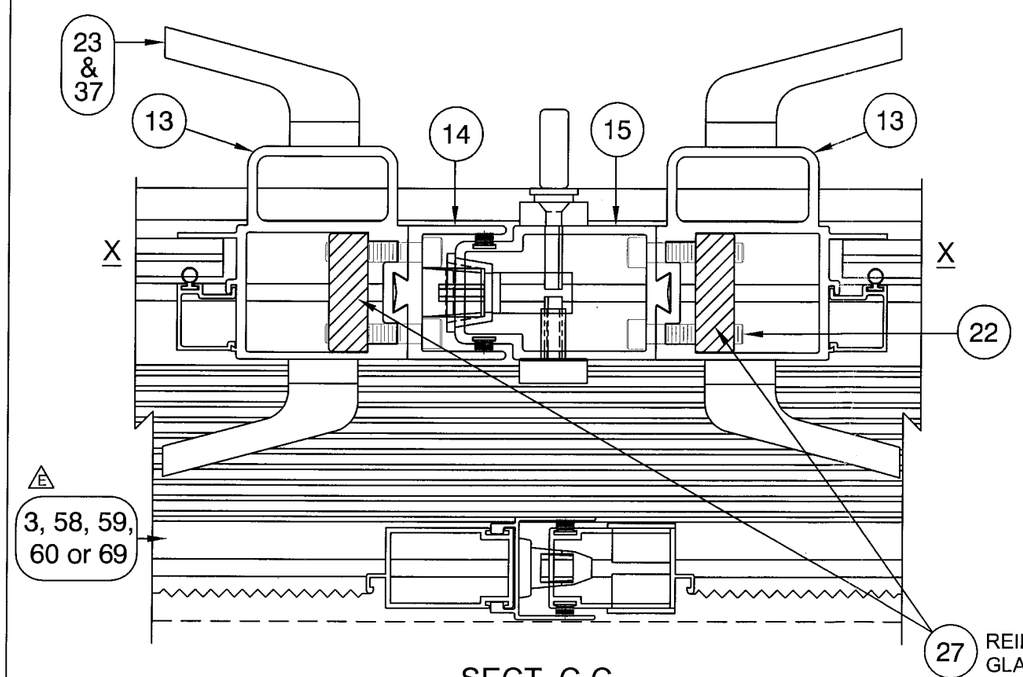

SECT. C-C
MOVABLE TO MOVABLE ASTRAGAL (INSIDE SHOWN)

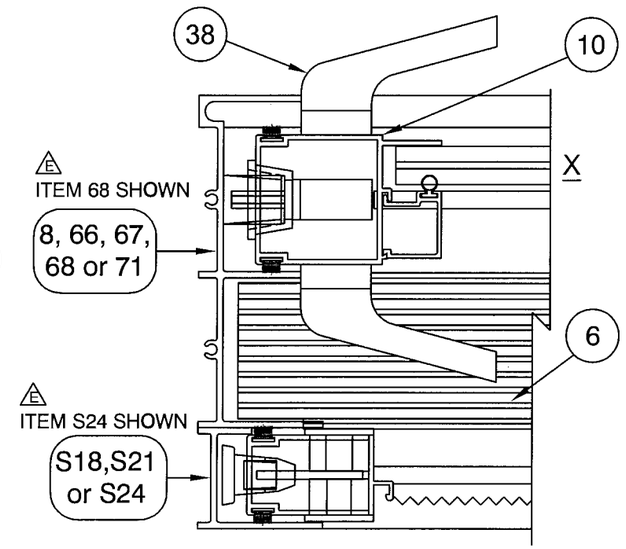

SECT. E-E
MOVABLE STILE AT JAMB (INSIDE)

Revsd By:	Date:	Revisions:	
F.K.	4/12/06	E	ADD ITEMS 69 AND 71, ALTERNATE 2 TRACK FRAME W/ SCREEN RAIL
F.K.	4/5/05	D	ADD 3 AND 4 TRACK OPTIONS AND GLASS TYPE G W/ REINF.
F.K.	10/7/04	C	NO CHANGE THIS SHEET
Drawn By: F.K.	Date: 6/18/04	Checked By: J.J.	Date: 4/15/05

1070 TECHNOLOGY DRIVE
NOKOMIS, FL 34275

P.O. BOX 1529
NOKOMIS, FL 34274

PGT
Visibly Better

Description: HORIZONTAL SECTIONS

Title: ALUM. SLIDING GLASS DOOR, IMPACT

Series/Model:	Scale:	Sheet:	Drawing No.	Rev:
SGD730	1/2	9 of 17	4406-1	E

PRODUCT REVISED
as complying with the Florida Building Code
Acceptance No 06-0523.03
Expiration Date NOV. 11, 2009
By Manuel Perez
Miami Dade Product Control Division

5/18/06

Lucas A. Turner, P.E.
PE #58201
Mechanical

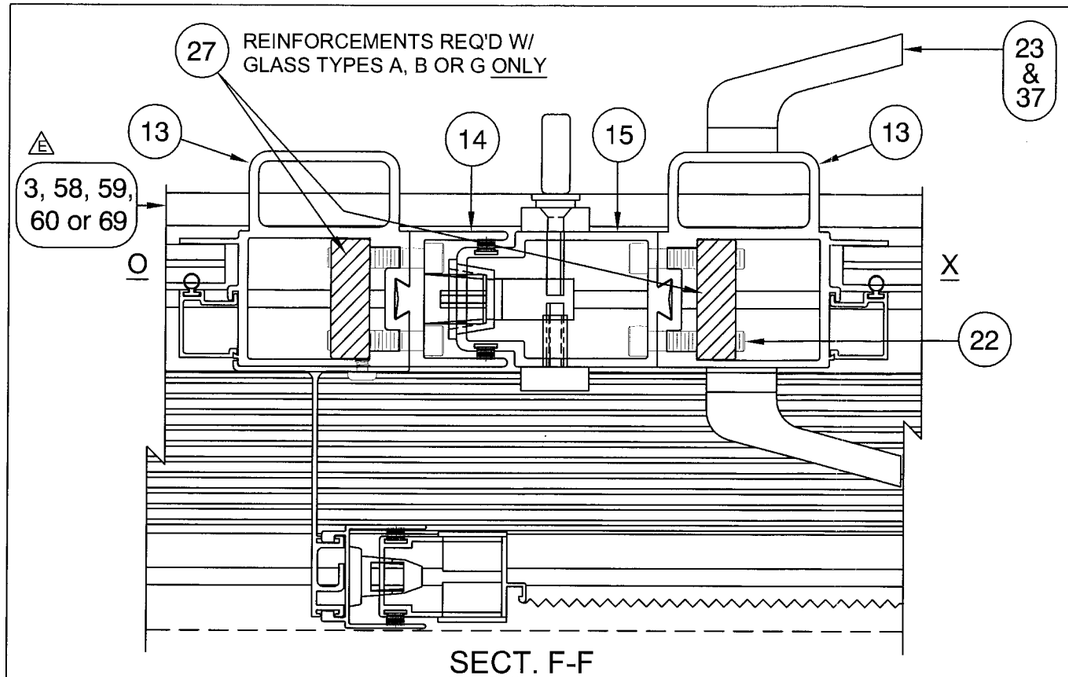

SECT. F-F
MOVABLE TO FIXED ASTRAGAL (INSIDE)

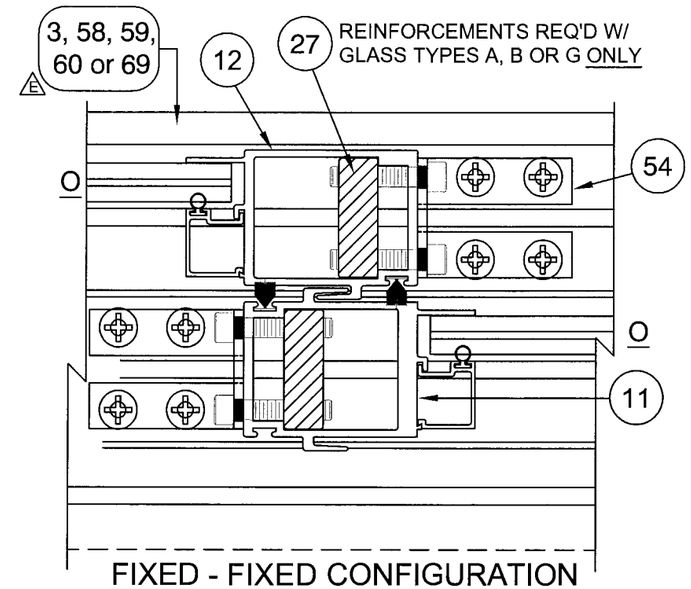

FIXED - FIXED CONFIGURATION
DOUBLE & SINGLE INTERLOCK
(NOT SHOWN IN SHEET 4 ELEVATIONS)

INTERIOR
(ALL SECTIONS)
EXTERIOR

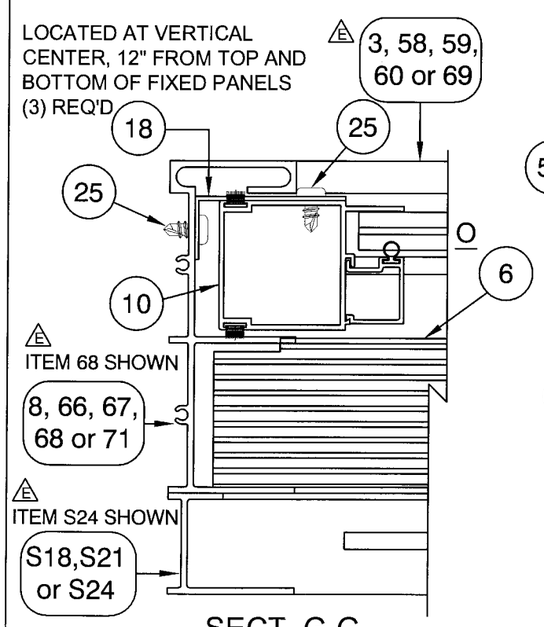

SECT. G-G
FIXED STILE AT JAMB (INSIDE)

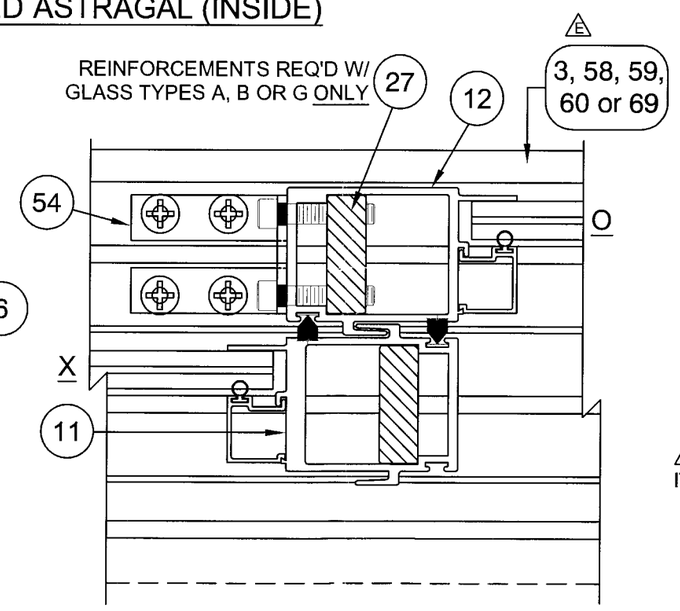

SECT. H-H
DOUBLE & SINGLE INTERLOCK (OX)

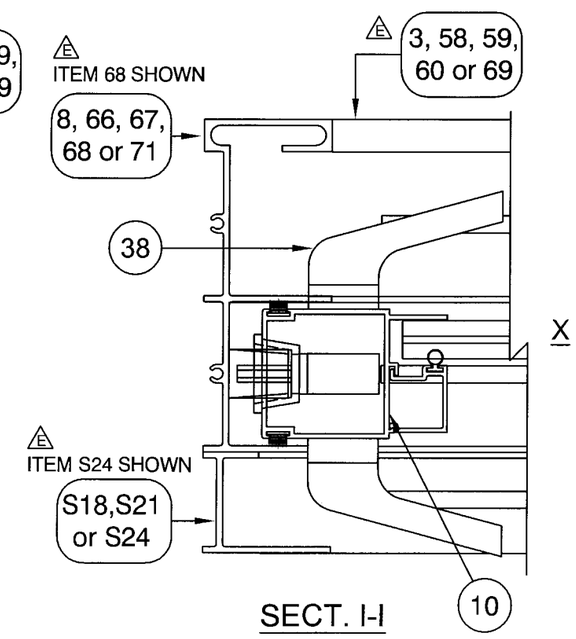

SECT. I-I
MOVABLE STILE AT JAMB (OUTSIDE)

PRODUCT REVISED
as complying with the Florida
Building Code
Acceptance No. 06-0523.03
Expiration Date NOV. 11, 2009
By Manuel Perez
Miami-Dade Product Control
Division

5/18/06

Revsd By:	Date:	Revisions:	
F.K.	4/12/06	E	ADD ITEMS 69 AND 71, ALTERNATE 2 TRACK FRAME W/ SCREEN RAIL
F.K.	4/5/05	D	ADD 3 AND 4 TRACK OPTIONS AND GLASS TYPE G W/ REINF.
F.K.	10/7/04	C	NO CHANGE THIS SHEET
Drawn By: F.K.	Date: 6/18/04	Checked By: J.J.	Date: 4/15/05

1070 TECHNOLOGY DRIVE
NOKOMIS, FL 34275

P.O. BOX 1529
NOKOMIS, FL 34274

PGT
Visibly Better

Description: HORIZONTAL SECTIONS CONTINUED

Title: ALUM. SLIDING GLASS DOOR, IMPACT

Series/Model:	Scale:	Sheet:	Drawing No.	Rev:
SGD730	1/2	10 of 17	4406-1	E

Lucas A. Turner, P.E.
PE #58201
Mechanical

ITEM	DWG#	PGT #	DESCRIPTION
1	4302	612245	ORIGINAL FRAME, HEAD
2	4386	7P4386	SILL/HEAD WEATHER STRIPPING PAD
3	4303	64303	ORIGINAL FRAME, SILL
4	4361	64361	ORIGINAL FRAME, 3.500 SILL ADD ON
5	4314	612254	ADAPTER, FIXED PANEL
6	4315	64315	THRESHOLD COVER
7	4385	71164	HEAVY DUTY 4 HOLE BUMP STOP
8	4304	612247	ORIGINAL FRAME, JAMB
9	1155-1	781PQA	#8 X 1" LG. S. STL. QUAD/PHIL PAN HEAD
10	4306	612249	PANEL SIDE RAIL
11	4383	64383	DOUBLE INTERLOCK
12	4399	64399	INTERLOCK
13	4398	64398	ASTRAGAL BASE
14	4380	64380	FEMALE ADD-ON
15	4381	64381	MALE ADD-ON
16	4305	64305	TOP & BOTTOM RAIL
17	4403A	64403A	P-HOOK FOR POCKET DOORS
18	4362	64362	FIXED PANEL CLIP
19	1235	67S16G	WSTP .170 X .270 BACK, FIN SEAL
20	4393	67393G	WSTP .400 X .270 BACK, FIN SEAL
21		720X112X	1/4-20 X 1.50 PH. PAN HEAD S. STL. TYPE F
22		71420X114SHCSF	1/4-20 X 1.25 LG. SHCS S. STL.
23		71032X1FPFX	#10-32 X 1" LG. PHILLIPS FLAT HEAD 18-8 S. STL. RECESS ADAPTER MOUNTING SCREW & HANDLES
24		70834X	#8 X 3/4" LG. PHILLIPS PAN HEAD 18-8 S. STL. KEEPER MOUNTING SCREW
25		78X38PPT	#8 X 3/8 LONG PHILLIPS PAN HEAD TEK
26		71032INSERT	10-32 ALUMIN THREADED INSERT
27	4357	64357M	ALUM. REINFORCEMENT .500 X 1.500
28	4388		MOVING/FIXED INTERLOCK END PLUG
29	4387	44387	ASTRAGAL BASE END PLUG
30	4389	44389N	LOCKSTILE END PLUG
31	4392	7XXX1MD(BSW)	TOP RIGHT STICKER COVER
32	4392	7XXX4MD(BSW)	BOTTOM RIGHT STICKER COVER
33	4392	7XXX3MD(BSW)	TOP LEFT STICKER COVER
34	4392	7XXX2MD(BSW)	BOTTOM LEFT STICKER COVER
35	1049	71049	TANDEM ROLLER
36	1636	72048 W,K,S	3/4" HOLE PLUG
37		7SGD4050	(1) TRUTH INTERIOR PULL HANDLE & BASE (1) TRUTH EXTERIOR PULL HANDLE & BASE (2) #8-32 X 1 3/4" COLOR MATCHED HANDLE BASE SCREWS
38		7SGD2889	(1) TRUTH INTERIOR PULL HANDLE & BASE (1) TRUTH EXTERIOR PULL HANDLE & BASE (2) #8-32 X 1 3/4" COLOR MATCHED HANDLE BASE SCREWS (1) MORTISE LOCK LATCH & KEEPER (1) STAINLESS MORTICE LOCK (1) ZINC DICHROMATE RECESS ADAPTER
39		7/16" LAMINATED GLASS - 3/16" H.S. - .090 DUPONT SENTRYGLAS PLUS INTERLAYER - 3/16" H.S.	
40		7/16" LAMINATED GLASS - 3/16" H.S. - .090 DUPONT BUTACITE OR SAFLEX/KEEPSAFE MAXIMUM INTERLAYER - 3/16" ANN.	

ITEM	DWG#	PGT #	DESCRIPTION
41		7/16" LAMINATED GLASS - 3/16" H.S. - .090 DUPONT BUTACITE OR SAFLEX/KEEPSAFE MAXIMUM INTERLAYER - 3/16" H.S.	
42		1 1/16" LAMINATED GLASS 3/16" TEMP - 7/16" AIR SPACE - 3/16" ANN. - .090 DUPONT BUTACITE OR SAFLEX/KEEPSAFE MAXIMUM INTERLAYER - 3/16" H.S.	
43		1 1/16" LAMINATED GLASS 3/16" TEMP - 7/16" AIR SPACE - 3/16" H.S. - .090 DUPONT BUTACITE OR SAFLEX/KEEPSAFE MAXIMUM INTERLAYER - 3/16" H.S.	
44		DOW CORNING 899 SILICONE GLAZING SEALANT	
45		DOW CORNING 995 SILICONE STRUCTURAL SEALANT	
46	1224	6TP247	VINYL BULB WEATHERSTRIP (THICK)
47	1225	6TP248	VINYL BULB WEATHERSTRIP (THIN)
49	4324	6534601	7/16" LAMI GLAZING BEAD
51	4395	64395	1 1/16" LAMI I.G. GLAZING BEAD
52	1267	71267N	SETTING BLOCKS 1" X 1/2" X 1/8" THICK
53	749	7BRKTM25	REINFORCEMENT SPRING CLIP
54	4356	74356A	FIXED PANEL ANGLE BRACKET
55		7/16" LAMINATED GLASS - 3/16" H.S. - .090 DUPONT SENTRYGLAS PLUS INTERLAYER - 3/16" ANN.	
56		9/16" LAMINATED GLASS - 1/4" H.S. - .090 DUPONT SENTRYGLAS PLUS INTERLAYER - 1/4" H.S.	
57	4375	64375	9/16" LAMI GLAZING BEAD
58	4407	64407	FRAME, 4 TRACK SILL
59	4408	64408	FRAME, 3 TRACK SILL
60	4409	64409	FRAME, 2 TRACK SILL
61	4410	64410	FRAME, 2.713 STANDARD SILL ADAPTER
62	4411	64411	FRAME, 3.500 SILL ADAPTER
63	4412	64412	FRAME, 4 TRACK HEAD
64	4413	64413	FRAME, 3 TRACK HEAD
65	4414	64414	FRAME, 2 TRACK HEAD
66	4415	64415	FRAME, 4 TRACK JAMB
67	4416	64416	FRAME, 3 TRACK JAMB
68	4417	64417	FRAME, 2 TRACK JAMB
E 69	4442	64442	FRAME, 2 TRACK SILL W/ SCREEN RAIL
E 70	4441	64441	FRAME, 2 TRACK HEAD W/ SCREEN RAIL
E 71	4443	64443	FRAME, 2 TRACK JAMB W/ SCREEN RAIL
S1	4317	612256	SCREEN, TOP RAIL
S4	4318	612257	SCREEN, BOTTOM RAIL
S7	4319	612258	SCREEN, SIDE RAIL
S11	4320	612259	SCREEN, MEETING RAIL
S13	4428	64428	SCREEN, DOUBLE INTERLOCK
S14	4344	64344	SCREEN, ASTRAGAL
S15	4384	64384	SCREEN, ASTRAGAL ADAPTER
S16	4418	64418	SCREEN, 3 TRACK SILL
S17	4419	64419	SCREEN, 3 TRACK HEAD
S18	4420	64420	SCREEN, 3 TRACK JAMB
S19	4421	64421	SCREEN, 2 TRACK SILL
S20	4422	64422	SCREEN, 2 TRACK HEAD
S21	4423	64423	SCREEN, 2 TRACK JAMB
S22	4424	64424	SCREEN, 1 TRACK SILL
S23	4425	64425	SCREEN, 1 TRACK HEAD
S24	4426	64426	SCREEN, 1 TRACK JAMB

PRODUCT REVISED
as complying with the Florida Building Code
Acceptance No. 06-0523.03
Expiration Date Nov. 11, 2009
By Manuel Perez
Miami-Dade Product Control Division

2 of 2
5/18/06

Revsd By:	Date:	Revisions:	
F.K.	4/12/06	E	ADD ITEMS 69, 70 AND 71, ALTERNATE 2 TRACK FRAME W/ SCREEN RAIL. REVISE LENGTH OF ITEM 17, P-HOOK FOR BETTER INSTALLATION.
F.K.	4/5/05	D	ADD ITEMS 58-68, S13 AND S16-S24
F.K.	10/7/04	C	ADD ITEMS 56 AND 67
Drawn By: F.K.	Date: 6/18/04	Checked By: J.J.	Date: 4/15/05

1070 TECHNOLOGY DRIVE
NOKOMIS, FL 34275

P.O. BOX 1529
NOKOMIS, FL 34274

PGT
Visibly Better

Description: PARTS LIST

Title: ALUM. SLIDING GLASS DOOR, IMPACT

Series/Model:	Scale:	Sheet:	Drawing No.	Rev:
SGD730	NTS	11 of 17	4406-1	E

Lucas A. Turner, P.E.
PE #58201
Mechanical

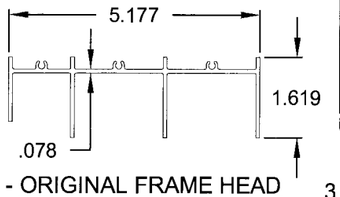

1 - ORIGINAL FRAME HEAD
MAT'L: 6063-T5
DWG# 4302

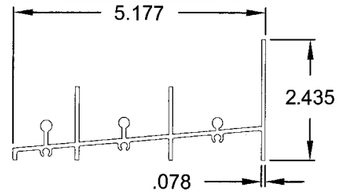

3 - ORIGINAL FRAME SILL
MAT'L: 6063-T5
DWG# 4303

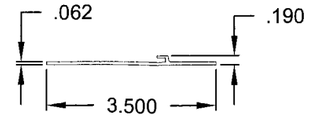

4 - ORIGINAL ADD ON SILL
MAT'L: 6063-T5
DWG# 4361

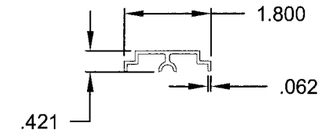

5 - ADAPTER, FIXED PANEL
MAT'L: 6063-T5
DWG# 4314

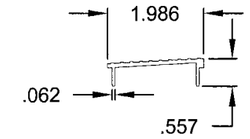

6 - THRESHOLD COVER
MAT'L: 6063-T5
DWG# 4315

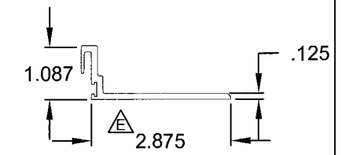

17 - P-HOOK
MAT'L: 6063-T6
DWG# 4403A

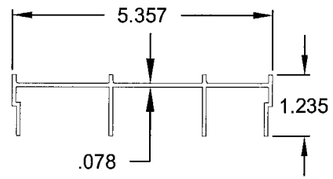

8 - ORIGINAL FRAME JAMB
MAT'L: 6063-T5
DWG# 4304

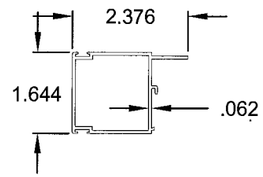

10 - PANEL SIDE RAIL
MAT'L: 6063-T5
DWG# 4306

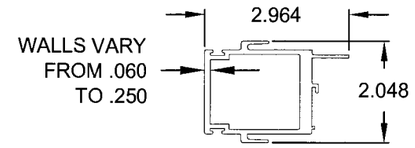

11 - DOUBLE INTERLOCK
MAT'L: 6063HS-T6
DWG# 4383

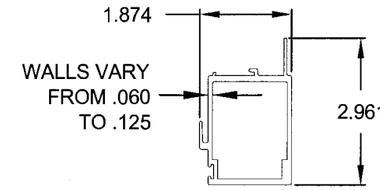

12 - INTERLOCK
MAT'L: 6063HS-T6
DWG# 4399

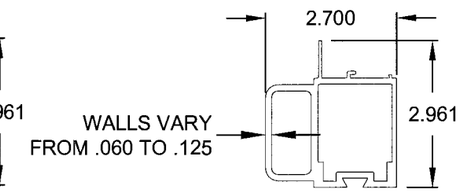

13 - ASTRAGAL BASE
MAT'L: 6063-T6
DWG# 4398

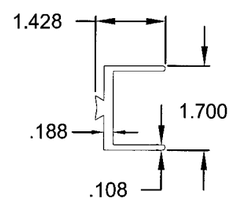

14 - FEMALE ADD-ON
MAT'L: 6063-T5
DWG# 4380

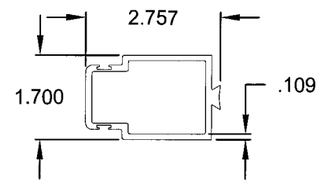

15 - MALE ADD-ON
MAT'L: 6063-T5
DWG# 4381

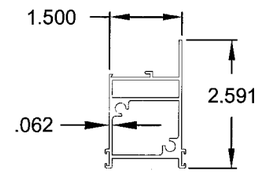

16 - TOP & BOTT. RAIL
MAT'L: 6063-T5
DWG# 4305

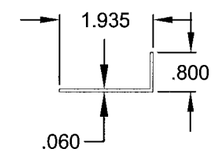

18 - FIXED PANEL CLIP
MAT'L: 6063-T5
DWG# 4362

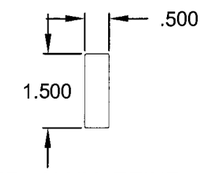

27 - ALUM. REINF.
MAT'L: 6005-T5
DWG# 4357

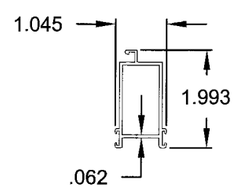

S4 - SCREEN BOTTOM RAIL
(SCREEN FRAME)
MAT'L: 6063-T5
DWG# 4318

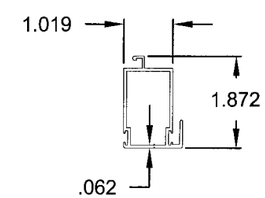

S11 - SCREEN MEETING RAIL
(SCREEN FRAME)
MAT'L: 6063-T5
DWG# 4320

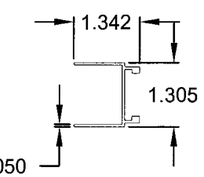

S14 - SCREEN ASTRAGAL
MAT'L: 6063-T5
DWG# 4344

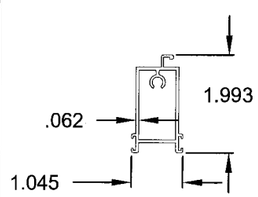

S1 - SCREEN TOP RAIL
(SCREEN FRAME)
MAT'L: 6063-T5
DWG# 4317

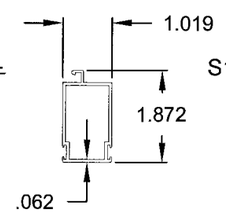

S7 - SCREEN SIDE RAIL
(SCREEN FRAME)
MAT'L: 6063-T5
DWG# 4319

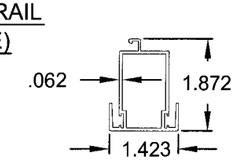

S13 - SCREEN DOUBLE INTERLOCK
(SCREEN FRAME)
MAT'L: 6063-T5
DWG# 4328

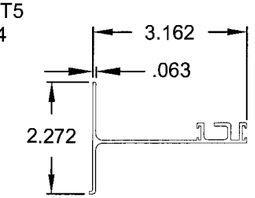

S15 - SCREEN
ASTRAGAL ADAPTER
MAT'L: 6063-T5
DWG# 4384

PRODUCT REVISED
as complying with the Florida
Building Code
Acceptance No. 06-0523.03
Expiration Date NOV. 11, 2009
By Manuel Sera
Miami-Dade Product Control
Division

2 of 2
5/18/06

Revsd By:	Date:	Revisions:	
F.K.	4/12/06	E	REVISE LENGTH OF ITEM 17, P-HOOK FOR BETTER INSTALLATION.
F.K.	4/5/05	D	REDRAW TO CONDENCE. CHG. ITEM 11 AND 12 ALLOY TO T6. ADD ITEMS 27 AND S13.
F.K.	10/7/04	C	NO CHANGE THIS SHEET
Drawn By: F.K.	Date: 6/18/04	Checked By: J.J.	Date: 4/15/05

1070 TECHNOLOGY DRIVE
NOKOMIS, FL 34275

P.O. BOX 1529
NOKOMIS, FL 34274

PGT
Visibly Better

Description: EXTRUSIONS

Title: ALUM. SLIDING GLASS DOOR, IMPACT

Series/Model:	Scale:	Sheet:	Drawing No.	Rev:
SGD730	NTS	12 of 17	4406-1	E

Lucas A. Turner, P.E.
PE #58201
Mechanical

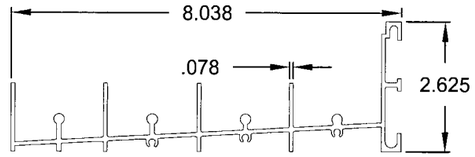

58 - 4 TRACK SILL
MAT'L: 6063-T6
DWG# 4407

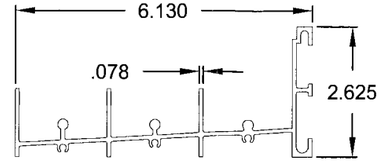

59 - 3 TRACK SILL
MAT'L: 6063-T6
DWG# 4408

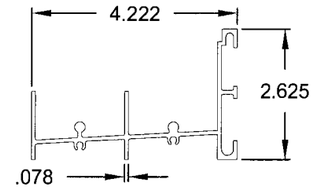

60 - 2 TRACK SILL
MAT'L: 6063-T6
DWG# 4409

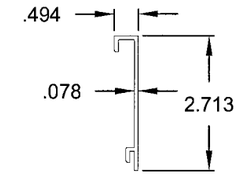

61 - STANDARD SILL RISER
MAT'L: 6063-T6
DWG# 4410

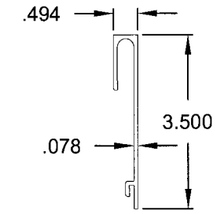

62 - 3.50" SILL RISER
MAT'L: 6063-T6
DWG# 4411

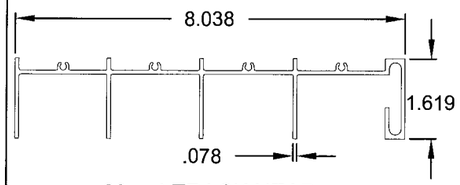

63 - 4 TRACK HEAD
MAT'L: 6063-T6
DWG# 4412

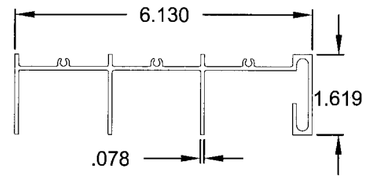

64 - 3 TRACK HEAD
MAT'L: 6063-T6
DWG# 4413

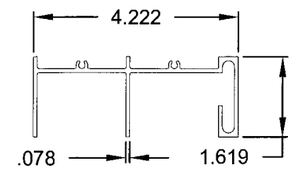

65 - 2 TRACK HEAD
MAT'L: 6063-T6
DWG# 4414

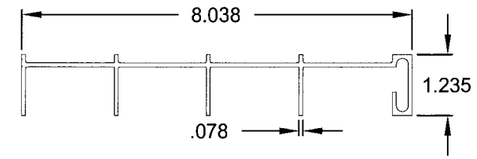

66 - 4 TRACK JAMB
MAT'L: 6063-T6
DWG# 4415

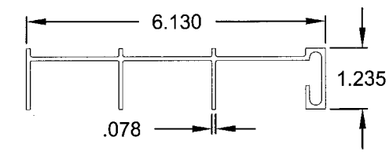

67 - 3 TRACK JAMB
MAT'L: 6063-T6
DWG# 4416

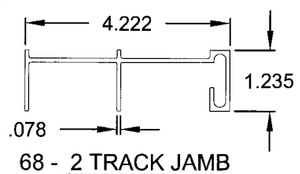

68 - 2 TRACK JAMB
MAT'L: 6063-T6
DWG# 4417

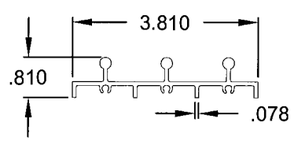

S16 - SCREEN
3 TRACK FRAME SILL
MAT'L: 6063-T6
DWG# 4418

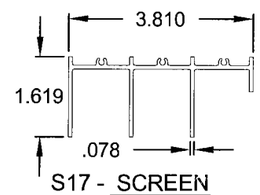

S17 - SCREEN
3 TRACK FRAME HEAD
MAT'L: 6063-T6
DWG# 4419

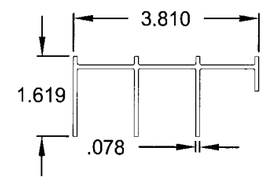

S18 - SCREEN
3 TRACK FRAME JAMB
MAT'L: 6063-T6
DWG# 4420

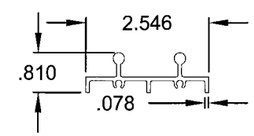

S19 - SCREEN
2 TRACK FRAME SILL
MAT'L: 6063-T6
DWG# 4421

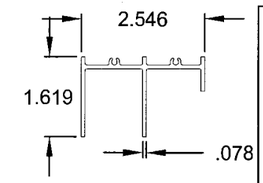

S20 - SCREEN
2 TRACK FRAME HEAD
MAT'L: 6063-T6
DWG# 4422

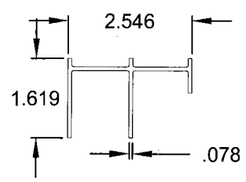

S21 - SCREEN
2 TRACK FRAME JAMB
MAT'L: 6063-T6
DWG# 4423

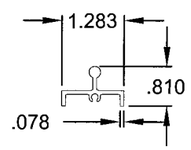

S22 - SCREEN
1 TRACK FRAME SILL
MAT'L: 6063-T6
DWG# 4424

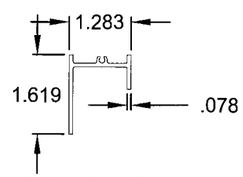

S23 - SCREEN
1 TRACK FRAME HEAD
MAT'L: 6063-T6
DWG# 4425

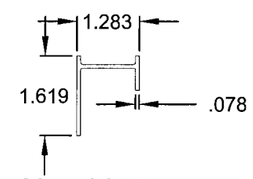

S24 - SCREEN
1 TRACK FRAME JAMB
MAT'L: 6063-T6
DWG# 4426

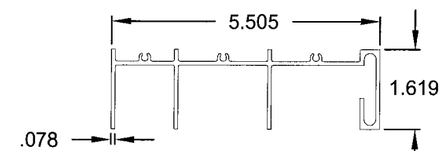

70 - FRAME, 2 TRACK HEAD W/ SCREEN RAIL
E
MAT'L: 6063-T6
DWG# 4441

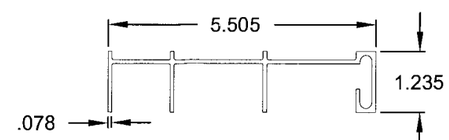

71 - FRAME, 2 TRACK JAMB W/ SCREEN RAIL
E
MAT'L: 6063-T6
DWG# 4443

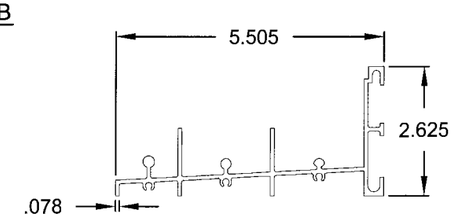

69 - FRAME, 2 TRACK SILL W/ SCREEN RAIL
E
MAT'L: 6063-T6
DWG# 4442

PRODUCT REVISED
as complying with the Florida
Building Code
Acceptance No. 06-0523.03
Expiration Date Nov. 11, 2009
By Manuel Perez
Miami Dade Product Control
Division

5/18/06

Revsd By:	Date:	Revisions:	
F.K.	4/12/06	E	ADD ITEMS 69, 70 AND 71, ALTERNATE 2 TRACK FRAME W/ SCREEN RAIL
F.K.	4/5/05	D	NEW SHEET FOR 3 AND 4 TRACK OPTIONS
Revsd By:	Date:	Revisions:	
Drawn By: F.K.	Date: 6/18/04	Checked By: J.J.	Date: 4/15/05

1070 TECHNOLOGY DRIVE
NOKOMIS, FL 34275

P.O. BOX 1529
NOKOMIS, FL 34274

PGT
Visibly Better

Description: EXTRUSIONS, FRAME

Title: ALUM. SLIDING GLASS DOOR, IMPACT

Series/Model:	Scale:	Sheet:	Drawing No.	Rev:
SGD730	NTS	13 of 17	4406-1	E

Lucas A. Turner, P.E.
PE #58201
Mechanical

HEAD AND SILL INTERLOCK & ASTRAGAL ANCHOR CLUSTER BY PANEL SIZE & GLASS TYPE

A. 7/16 LAMI (A, .090 SGP, H)
B. 7/16 LAMI (H, .090 SGP, H)
C. OR E. 7/16 LAMI (A,H) OR IN 1 1/16 LAMI I.G
G. 9/16" LAMI (H,.090 SGP, H)
D. OR F. 7/16 LAMI (H,H) OR IN 1 1/16 LAMI I.G.

ANCHOR TYPE & SUBSTRATE

DOOR HEIGHT

NOM. PANEL WIDTH	GLAZING OPTION	72" (6⁰)				80" (6⁸)				84" (7⁰)				90" (7⁶)				96" (8⁰)				102" (8⁶)				108" (9⁰)				114" (9⁶)				120" (10⁰)			
		1,2 WOOD OR CONC		3, WOOD		1,2 WOOD OR CONC		3, WOOD		1,2 WOOD OR CONC		3, WOOD		1,2 WOOD OR CONC		3, WOOD		1,2 WOOD OR CONC		3, WOOD		1,2 WOOD OR CONC		3, WOOD		1,2 WOOD OR CONC		3, WOOD		1,2 WOOD OR CONC		3, WOOD		1,2 WOOD OR CONC		3, WOOD	
		HEAD	SILL	HEAD	SILL	HEAD	SILL	HEAD	SILL	HEAD	SILL	HEAD	SILL	HEAD	SILL	HEAD	SILL	HEAD	SILL	HEAD	SILL	HEAD	SILL	HEAD	SILL	HEAD	SILL	HEAD	SILL	HEAD	SILL	HEAD	SILL	HEAD	SILL	HEAD	SILL
24" (2⁰)	A,B	A	A	B	B	A	A	B	B	B	A	C	B	B	A	C	B	B	A	C	B	B	A	C	B	B	A	C	B	B	A	C	B	B	B	C	B
	C,D,E,F,G	B	A	C	B	B	A	C	B	B	A	C	B	B	B	C	C	B	B	C	C																
30" (2⁶)	A,B	B	A	B	B	B	A	C	B	B	A	C	B	B	B	C	C	B	B	C	C	B	B	C	B	B	B	C	C	B	B	C	C	B	B	D	C
	C,D,E,F,G	B	A	B	B	B	A	C	B	B	A	C	B	B	B	C	C	B	B	C	C																
36" (3⁰)	A,B,C,E	B	A	C	B	B	B	C	B	B	B	C	C	B	B	D	C	B	B	D	C	B	B	C	C	B	B	D	C	C	B	D	C	C	B	D	C
	D,F,G	B	B	C	C	B	B	D	C	B	B	D	C	C	B	D	C	C	B	D	D																
42" (3⁶)	A,C,E	B	A	C	B	B	A	C	B	B	A	C	B	B	A	C	B	B	A	C	B	B	A	C	B	B	A	C	B	B	B	C	B	B	B	C	C
	B	B	A	C	B	B	B	C	C	B	B	D	C	C	B	D	C	C	B	D	C	C	B	D	C	C	B	D	C	C	B	D	D	C	B	E	D
	D,F,G	B	B	C	C	C	B	D	C	C	B	D	C	C	B	E	D	C	C	E	D																
48" (4⁰)	A,C,E	A	A	B	B	A	A	B	B	A	A	B	B	B	A	B	B	B	A	C	B	B	A	C	B	B	A	C	B	B	A	C	B	B	A	C	B
	B	B	B	C	C	B	B	D	C	C	B	D	C	C	B	D	D	C	B	E	D	C	B	D	C	C	B	E	D	C	C	E	D	C	C	E	D
	D,F,G	B	B	D	C	C	B	D	D	C	B	E	D	C	C	E	D	D	C	E	D																
54" (4⁶)	A	A	A	B	B	A	A	B	B	A	A	B	B	A	A	B	B	A	A	B	B																
	B,G	B	B	C	C	B	B	D	C	C	B	D	C	C	B	D	D	C	C	E	D																
60" (5⁰)	A	A	A	B	A	A	A	B	B	A	A	B	B	A	A	B	B	A	A	B	B																
	B,G	B	B	C	C	C	B	D	C	C	B	D	D	C	C	E	D	D	C	E	D																

APPROVED ANCHORS: 1. ELCO 1/4" TAPCONS 2. ELCO 1/4" SS4 CRETE-FLEX 3.#12 SCREWS

E TABLE 7.

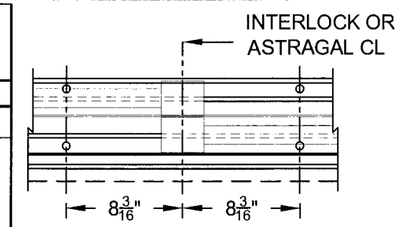

CLUSTER A - (4) ANCHORS

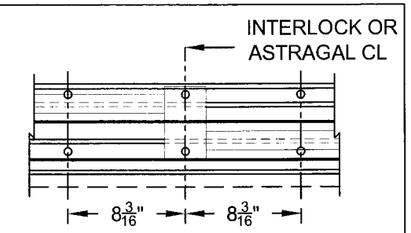

CLUSTER B - (6) ANCHORS

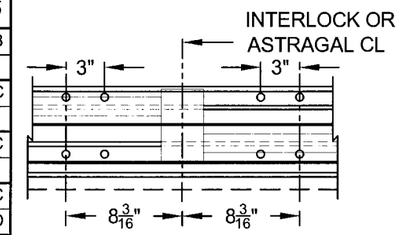

CLUSTER C - (8) ANCHORS

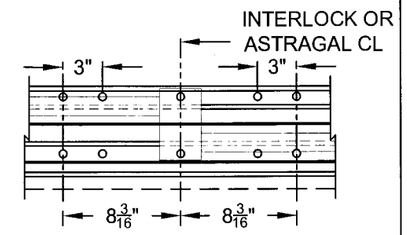

CLUSTER D - (10) ANCHORS

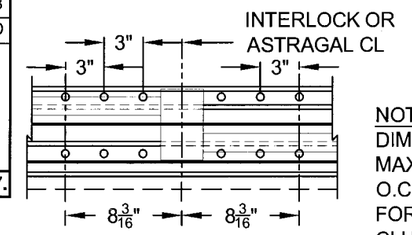

CLUSTER E - (12) ANCHORS

EXTERIOR (ALL)

NOTE: 8 3/16" DIMENSION IS MAX. AND 3" O.C. IS MIN. FOR ALL CLUSTERS.

MIAMI-DADE COUNTY ANCHORAGE SPACING REQUIREMENTS: E

1. (2) ANCHORS REQUIRED AT EACH HEAD, SILL AND JAMB LOCATION.
   (1) ANCHOR REQUIRED AT EACH P-HOOK LOCATION. ANCHOR LOCATIONS TO BE STAGGERED.
2. MAX. 96" HIGH DOORS W/ PANELS UP TO 48" WIDE.
   HEAD & SILL.. 8 1/4" MAX. FROM CORNERS AND APPLICABLE CLUSTER(S) FROM TABLE 7 AT EACH ASTRAGAL AND INTERLOCK CENTERLINE
   16 3/8" MAX. O.C. FOR 1/4" TAPCONS, CRETE-FLEX OR #12 SCREWS.
   JAMBS..... 8" MAX FROM BOTTOM AND 24" MAX. O.C. FOR 1/4" TAPCONS OR CRETE-FLEX. 16" MAX. O.C. FOR #12 SCREWS.
   P-HOOKS..... 8" MAX. FROM BOTTOM AND 15" MAX. O.C. FOR 1/4" TAPCONS, CRETE-FLEX OR #12 SCREWS.
3. MAX. 120" HIGH DOORS W/ PANELS UP TO 48" WIDE.
   HEAD & SILL.. 8 1/4" MAX. FROM CORNERS AND APPLICABLE CLUSTER(S) FROM TABLE 7 AT EACH ASTRAGAL AND INTERLOCK CENTERLINE.
   16 3/8" MAX. O.C. (1/4" TAPCONS, CRETE-FLEX OR #12 SCREWS.
   JAMBS..... 8" MAX FROM BOTTOM AND 26" MAX. O.C. FOR 1/4" TAPCONS OR CRETE-FLEX. 22" MAX. O.C. FOR #12 SCREWS.
   P-HOOKS..... 8" MAX. FROM BOTTOM AND 20 1/4" MAX. O.C. FOR 1/4" TAPCONS, CRETE-FLEX OR #12 SCREWS.
4. MAX. 96" HIGH DOORS W/ PANELS UP TO 60" WIDE.
   HEAD & SILL.. 8 1/4" MAX. FROM CORNERS AND APPLICABLE CLUSTER(S) FROM TABLE 7 AT EACH ASTRAGAL AND INTERLOCK CENTERLINE.
   22 13/16" MAX. O.C. FOR 1/4" TAPCONS OR CRETE-FLEX. 15 3/8" MAX. O.C. FOR #12 SCREWS.
   JAMBS..... 8" MAX FROM BOTTOM AND 22" MAX. O.C. FOR 1/4" TAPCONS OR CRETE-FLEX. 15" MAX. O.C. FOR #12 SCREWS.
   P-HOOKS..... 8" MAX. FROM BOTTOM AND 13 7/8" MAX. O.C. FOR 1/4" TAPCONS, CRETE-FLEX OR #12 SCREWS.

ANCHORAGE SPACING FOR DOORS INSTALLED OUTSIDE MIAMI-DADE COUNTY:

5. MAX. 96" HIGH DOORS W/ PANELS UP TO 48" WIDE.
   HEAD & SILL..... 8 1/4" MAX. FROM CORNERS AND CLUSTER A, AT EACH HEAD AND SILL ASTRAGAL AND INTERLOCK CENTERLINE. 16 3/8" MAX. O.C.
   JAMB..... 8" MAX FROM BOTTOM AND 26 11/16" MAX. O.C. P-HOOK..... 8" MAX FROM BOTTOM AND 15" MAX. O.C
6. MAX. 120" HIGH DOORS W/ PANELS UP TO 48" WIDE.
   HEAD & SILL..... 8 1/4" MAX. FROM CORNERS AND CLUSTER A, AT EACH HEAD AND SILL ASTRAGAL AND INTERLOCK CENTERLINE. 16 3/8" MAX. O.C.
   JAMB..... 8" MAX FROM BOTTOM AND 26" MAX. O.C. P-HOOK..... 8" MAX FROM BOTTOM AND 20 1/4" MAX. O.C
7. MAX. 96" HIGH DOORS W/ PANELS UP TO 60" WIDE.
   HEAD & SILL..... 8 1/4" MAX. FROM CORNERS AND CLUSTER A, AT EACH HEAD AND SILL ASTRAGAL AND INTERLOCK CENTERLINE. 22 13/16" MAX. O.C. .
   JAMB..... 8" MAX FROM BOTTOM AND 26 11/16" MAX. O.C. P-HOOK..... 8" MAX FROM BOTTOM AND 13 7/8" MAX. O.C

PRODUCT REVISED
as complying with the Florida Building Code
Acceptance No 06-0523.03
Expiration Date NOV. 11, 2009
By Manuel Perez
Miami-Dade Product Control Division

5/18/06

Revsd By:	Date:	Revisions:	
F.K.	4/12/06	E	REVISE P-HOOK SPACING, ADD CRETE-FLEX AND UPGRADE NOTES.
F.K.	4/5/05	D	CONDENSE TABLE 7. AND UPGRADE ANCHORAGE PER FBC 2004
F.K.	10/7/04	C	RECALC ANCHOR CAPACITIES, UPDATE SPACING NOTES AND TABLE
Drawn By: F.K.	Date: 6/18/04	Checked By: J.J.	Date: 4/15/05

1070 TECHNOLOGY DRIVE
NOKOMIS, FL 34275
P.O. BOX 1529
NOKOMIS, FL 34274

PGT Visibly Better

Description: ANCHORAGE, SPACING

Title: ALUM. SLIDING GLASS DOOR, IMPACT

Series/Model:	Scale:	Sheet:	Drawing No.	Rev:
SGD730	1/8	14 of 17	4406-1	E

Lucas A. Turner, P.E.
PE #58201
Mechanical

NOTES:
1. MIN. DISTANCE FROM CONCRETE ANCHOR TO CONCRETE EDGE IS 2_1/2" FOR HEAD, SILL AND JAMB AND 1" FOR P-HOOK INSTALLATION. FOR CONCRETE APPLICATIONS IN MIAMI-DADE COUNTY, USE ONLY MIAMI-DADE COUNTY APPROVED ELCO 1/4" TAPCONS OR 1/4" ELCO SS4 CRETE-FLEX ANCHORS. FLAT HEADS TO BE #12 TRIMFIT TYPE. E
2. WOOD BUCKS DEPICTED AS 1x ARE LESS THAN 1 1/2" THICK. 1x WOOD BUCKS ARE OPTIONAL IF UNIT IS INSTALLED DIRECTLY TO SOLID CONCRETE. WOOD BUCKS DEPICTED AS 2x ARE 1 1/2" THICK OR GREATER. INSTALLATION TO THE SUBSTRATE OF WOOD BUCKS TO BE ENGINEERED BY OTHERS OR AS APPROVED BY THE AUTHORITY HAVING JURISDICTION (AHJ).
3. FOR ATTACHMENT TO ALUMINUM: THE ALUMINUM SHALL BE A MINIMUM STRENGTH OF 6063-T5 AND A MINIMUM OF 1/8" THICK. THE ALUMINUM STRUCTURAL MEMBER SHALL BE OF A SIZE TO PROVIDE FULL SUPPORT TO THE DOOR FRAME SIMILAR TO THAT SHOWN IN THE DETAILS ON SHEETS 15, 16 AND 17 FOR 2x WOOD BUCKS. THE ANCHORS SHALL BE #12 SHEET METAL SCREWS WITH FULL THREAD ENGAGEMENT INTO THE ALUMINUM. IF THESE CRITERIA ARE MET, THE PRESSURES SHOWN ON SHEET 3 AND ANCHORAGE SPACING FOR #12 SCREWS SHOWN ON SHEET 14 MAY BE USED.
4. SCREEN FRAME AND DOOR FRAME MAY BE ATTACHED TO DIFFERENT SUBSTRATE TYPES AS REQUIRED TO ACCOMMODATE THE EXTRA DEPTH OF MULTI-TRACK CONFIGURATIONS, AS APPROVED BY AHJ. DESIGN OF COMPOSITE WOOD/MASONRY OPENINGS DONE BY OTHERS OR AS ACCEPTED BY AHJ. FASTENER SIZE, EMBEDMENT, AND SPACING MUST BE AS INDICATED FOR THE SUBSTRATE INTO WHICH THE FASTNER IS EMBEDED.
5. FOR WOOD APPLICATIONS ELCO 1/4" TAPCONS OR 1/4" SS4 CRETE-FLEX ANCHORS WITH #12 TRIMFIT HEADS MAY BE USED INSTEAD OF #12 SCREWS. SEE TABLE 7. E

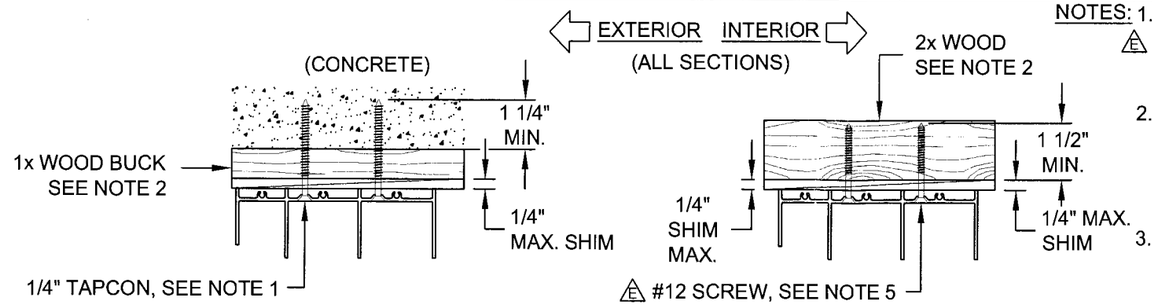

ORIGINAL 2-TRACK FRAME HEAD INSTALLATIONS

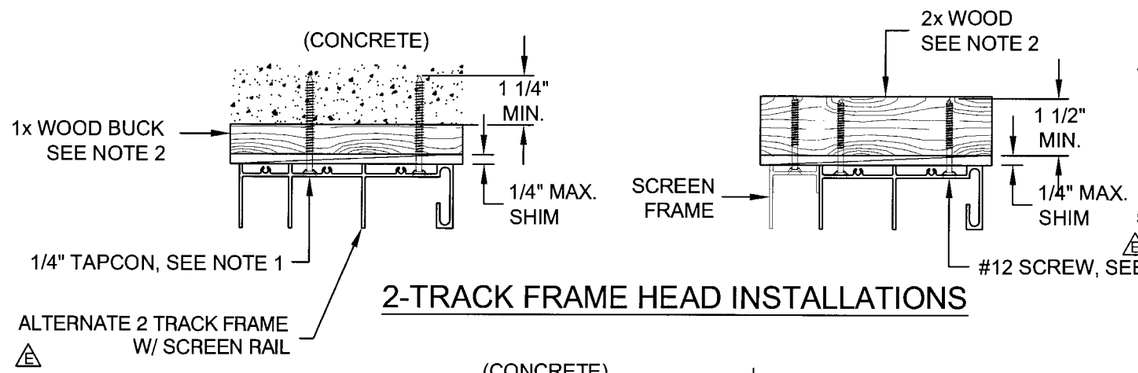

2-TRACK FRAME HEAD INSTALLATIONS

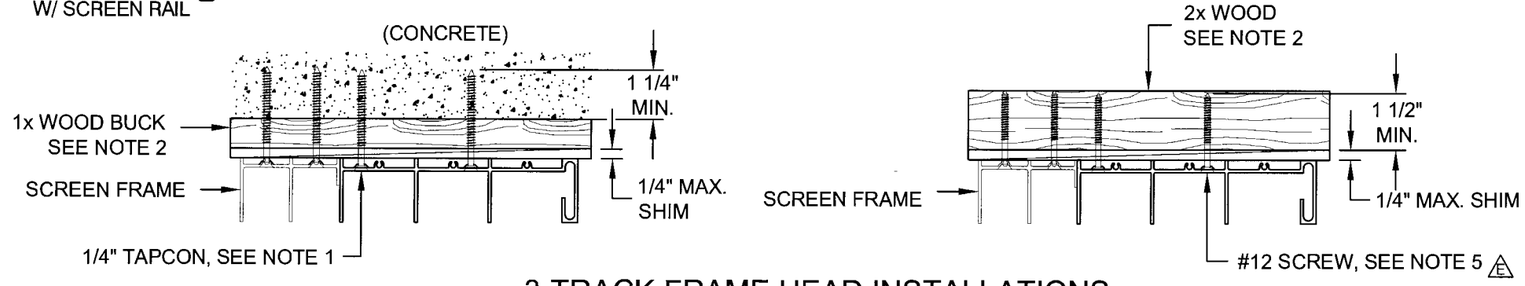

3-TRACK FRAME HEAD INSTALLATIONS

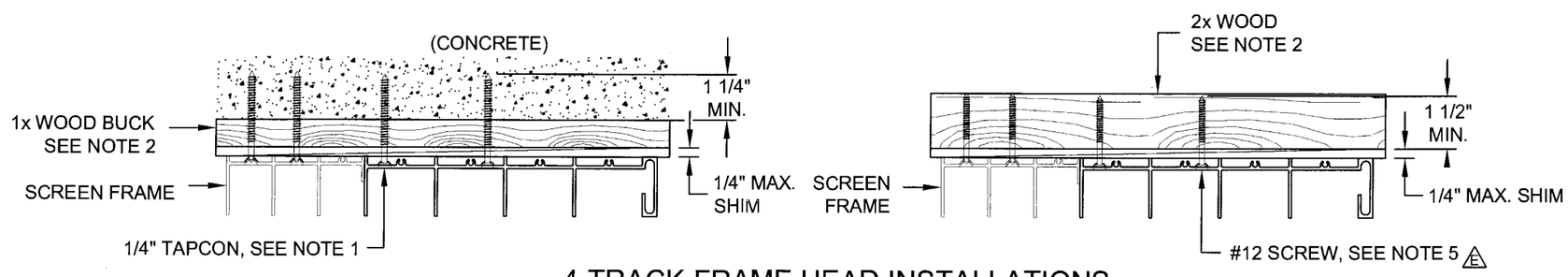

4-TRACK FRAME HEAD INSTALLATIONS

PRODUCT REVISED
as complying with the Florida Building Code
Acceptance No. 06-0523.03
Expiration Date NOV. 11, 2009
By Manuel Perez
Miami Dade Product Control Division

5/18/06

Revsd By:	Date:	Revisions:	
F.K.	4/12/06	E	ADD ALTERNATE 2 TRACK FRAME W/ SCREEN RAIL AND NOTE 5. UPGRADE NOTE 1 TO INCLUDE CRETE-FLEX AND EDGE DISTANCE FOR P-HOOK.
F.K.	4/5/05	D	REVISE NOTES AND ADD 3 & 4-TRACK AND ALTERNATE 2-TRACK OPTIONS
F.K.	10/7/04	C	REMOVE MFR NAME, NOTE 1
Drawn By: F.K.	Date: 6/18/04	Checked By: J.J.	Date: 4/15/05

1070 TECHNOLOGY DRIVE
NOKOMIS, FL 34275

P.O. BOX 1529
NOKOMIS, FL 34274

PGT
Visibly Better

Description: ANCHORAGE DETAILS, HEAD

Title: ALUM. SLIDING GLASS DOOR, IMPACT

Series/Model:	Scale:	Sheet:	Drawing No.	Rev:
SGD730	1/4	15 of 17	4406-1	E

Lucas A. Turner, P.E.
PE #58201
Mechanical

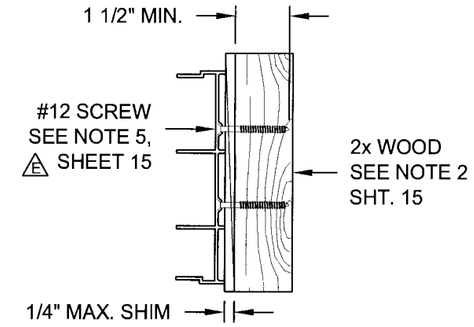

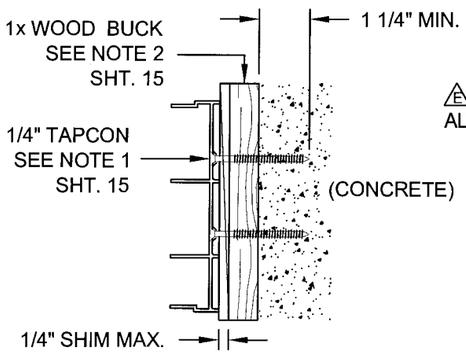

ORIGINAL 2-TRACK FRAME JAMB INSTALLATIONS

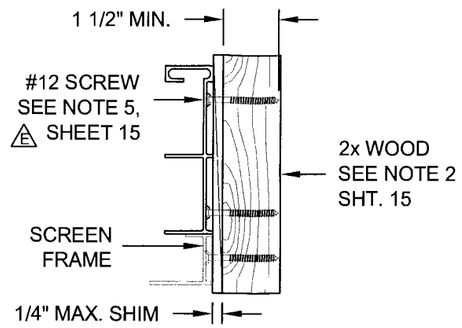

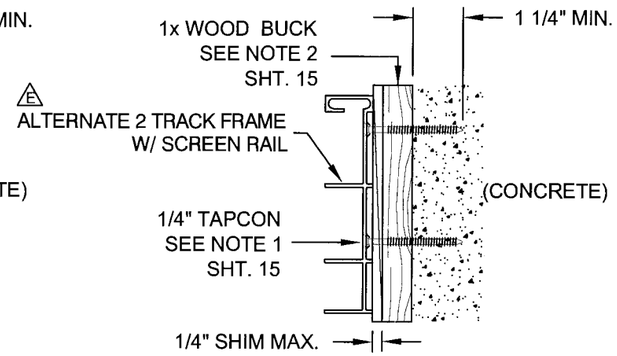

2-TRACK FRAME JAMB INSTALLATIONS

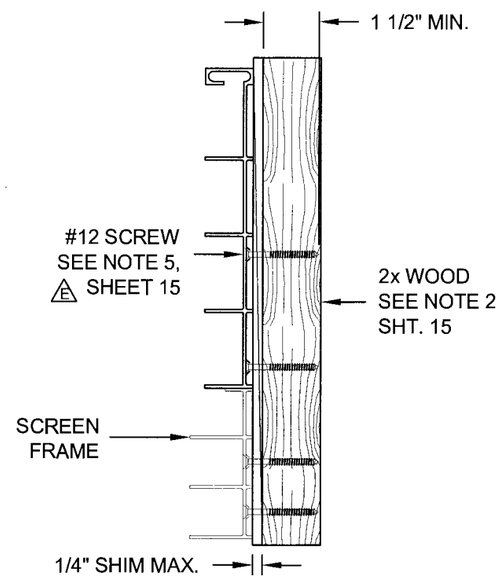

INTERIOR
(ALL SECTIONS)
EXTERIOR

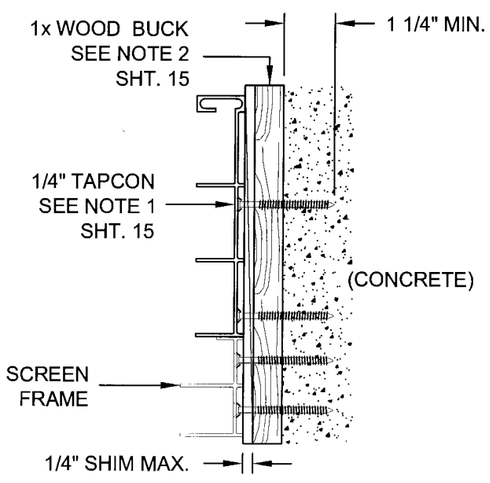

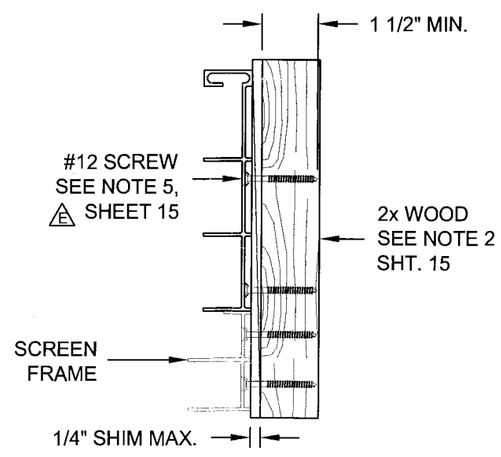

3-TRACK FRAME JAMB INSTALLATIONS

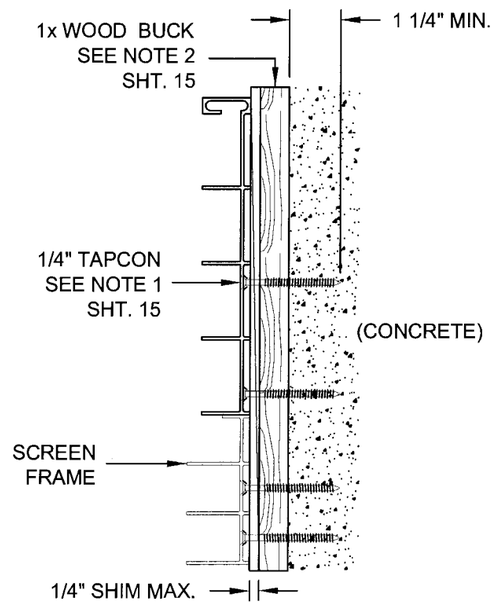

4-TRACK FRAME JAMB INSTALLATIONS

PRODUCT REVISED
as complying with the Florida
Building Code
Acceptance No. 06-0523.03
Expiration Date NOV. 11, 2009
By Manuel Sera
Miami Dade Product Control
Division

L of L
5/18/06

Revsd By:	Date:	Revisions:	
F.K.	4/12/06	E	ADD ALTERNATE 2 TRACK FRAME W/ SCREEN RAIL AND NOTE 5 REF.
F.K.	4/5/05	D	ADD 3 & 4-TRACK AND ALTERNATE 2-TRACK OPTIONS
F.K.	10/7/04	C	NO CHANGE THIS SHEET
Drawn By: F.K.	Date: 6/18/04	Checked By: J.J.	Date: 4/15/05

1070 TECHNOLOGY DRIVE
NOKOMIS, FL 34275

P.O. BOX 1529
NOKOMIS, FL 34274

PGT
Visibly Better

Description: ANCHORAGE DETAILS, JAMB

Title: ALUM. SLIDING GLASS DOOR, IMPACT

Series/Model:	Scale:	Sheet:	Drawing No.	Rev:
SGD730	1/4	16 of 17	4406-1	E

Lucas A. Turner, P.E.
PE #58201
Mechanical

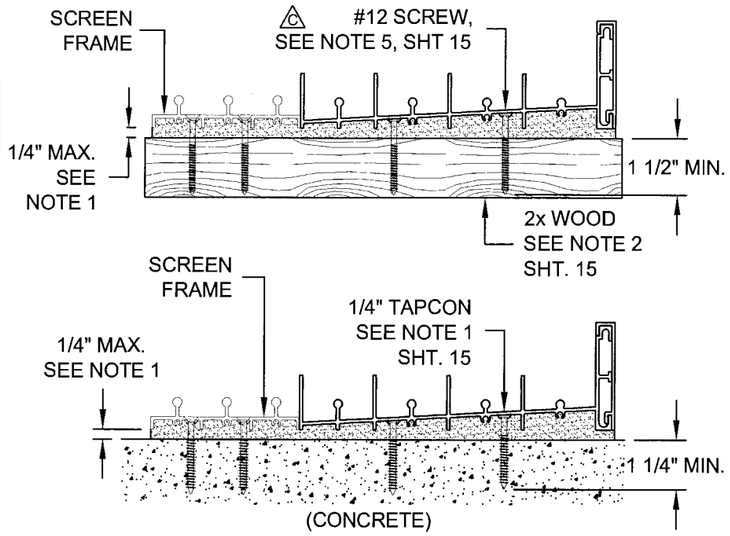

4-TRACK FRAME SILL INSTALLATIONS

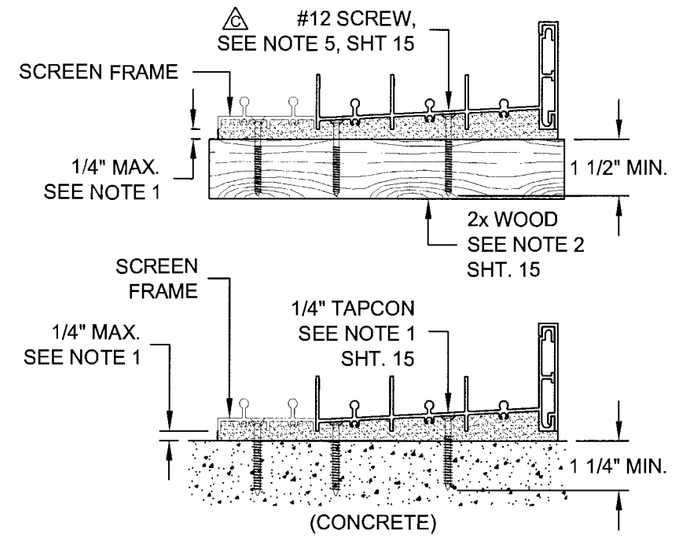

3-TRACK FRAME SILL INSTALLATIONS

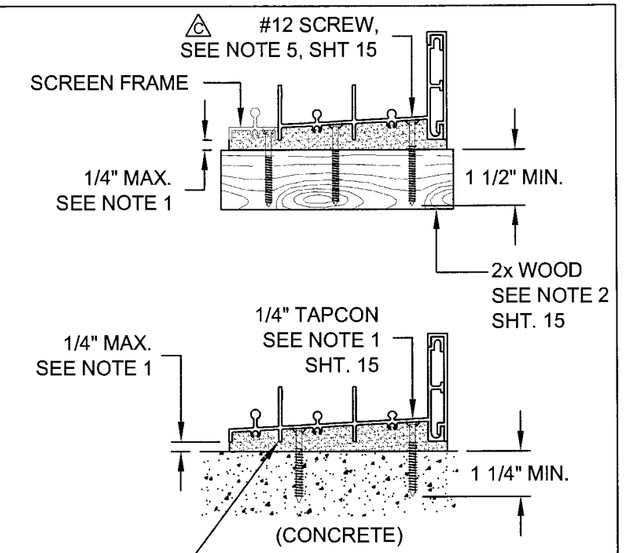

2-TRACK FRAME SILL INSTALLATIONS

E ALTERNATE 2 TRACK FRAME W/ SCREW RAIL

EXTERIOR INTERIOR
(ALL SILL SECTIONS)

E
ANCHORS ARE STAGGERED 1" MIN. AT P-HOOK
ANCHOR EMBEDMENT AT P-HOOK: 1/4" TAPCON - 1 1/4" MIN.
1/4" CRETE-FLEX - 1 3/4" MIN.

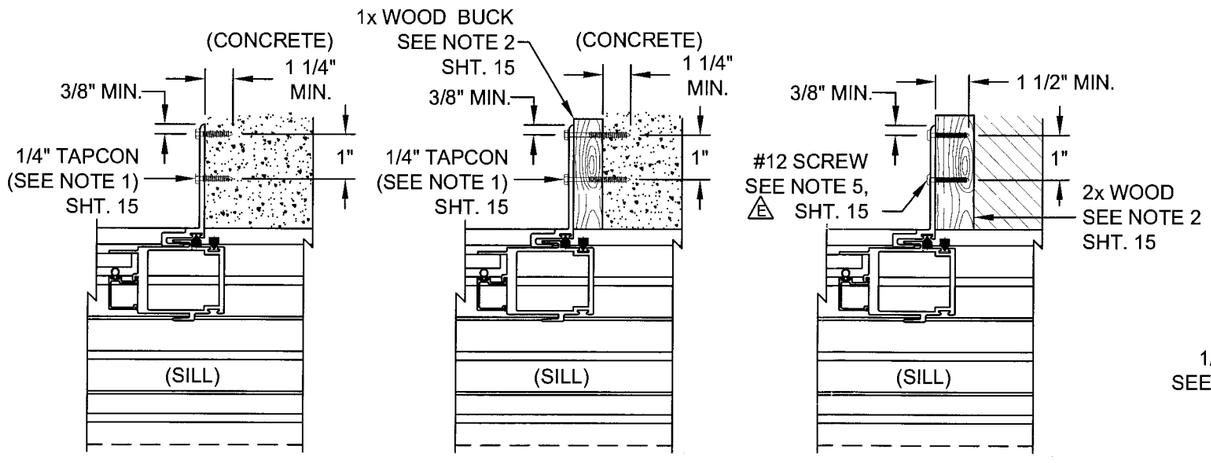

TYPICAL POCKET P-HOOK INSTALLATIONS

INTERIOR
(ALL P-HOOK SECTIONS)
EXTERIOR

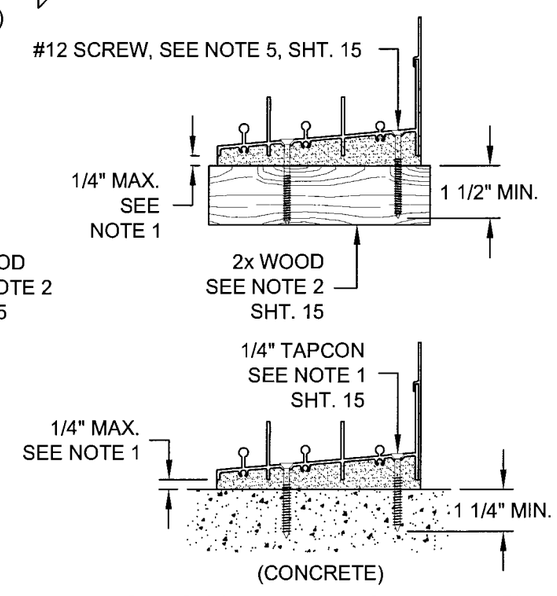

ORIGINAL 2-TRACK FRAME SILL INSTALLATIONS

NOTE:
1. IF SILL IS TIGHT TO SUBSTRATE, GROUT OR OTHER MATERIAL IS NOT REQUIRED. IF USED, GROUT OR OTHER MAT'L (DONE BY OTHERS) MUST FULLY SUPPORT THE ENTIRE LENGTH OF THE SILL THAT IS NOT TIGHT TO THE SUBSTRATE, AND TRANSFER SHEAR LOAD TO SUBSTRATE.

Revsd By:	Date:	Revisions:	
F.K.	4/12/06	E	ADD ALTERNATE 2 TRACK FRAME W/ SCREW RAIL AND P-HOOK CHANGE.
F.K.	4/5/05	D	ADD 3 & 4-TRACK, ALTERNATE 2-TRACK OPTIONS AND GROUT NOTE
F.K.	10/7/04	C	NO CHANGE THIS SHEET
Drawn By: F.K.	Date: 6/18/04	Checked By: J.J.	Date: 4/15/05

1070 TECHNOLOGY DRIVE
NOKOMIS, FL 34275
P.O. BOX 1529
NOKOMIS, FL 34274

PGT
Visibly Better

Description: ANCHORAGE DETAILS, SILL & POCKET P-HOOK
Title: ALUM. SLIDING GLASS DOOR, IMPACT

Series/Model:	Scale:	Sheet:	Drawing No.	Rev:
SGD730	1/4	17 of 17	4406-1	E

PRODUCT REVISED
as complying with the Florida Building Code
Acceptance No. 06-0523.03
Expiration Date NOV. 11, 2009
By Manuel Perez
Miami Dade Product Control Division

5/18/06

Lucas A. Turner, P.E.
PE #58201
Mechanical