MIAMI-DADE

BUILDING CODE COMPLIANCE OFFICE (BCCO)
PRODUCT CONTROL DIVISION

MIAMI-DADE COUNTY, FLORIDA
METRO-DADE FLAGLER BUILDING
140 WEST FLAGLER STREET, SUITE 1603
MIAMI, FLORIDA 33130-1563
(305) 375-2901 FAX (305) 375-2908

NOTICE OF ACCEPTANCE (NOA)

Greenheck Fan Corporation.
525 Western Road.
P.O. Box 410
Schofield, WI 54476-0410

SCOPE: This NOA is being issued under the applicable rules and regulations governing the use of construction materials. The documentation submitted has been reviewed by Miami-Dade County Product Control Division and accepted by the Board of Rules and Appeals (BORA) to be used in Miami Dade County and other areas where allowed by the Authority Having Jurisdiction (AHJ).

This NOA shall not be valid after the expiration date stated below. The Miami Dade County Product Control Division (in Miami-Dade County) and/or the AHJ (in areas other than Miami Dade County) reserve the right to have this product or material tested for quality assurance purposes. If this product or material fails to perform in the accepted manner, the manufacturer will incur the expense of such testing and the AHJ may immediately revoke, modify, or suspend the use of such product or material within their jurisdiction. BORA reserves the right to revoke this acceptance, if it is determined by Miami-Dade county Product Control Division that this product or material fails to meet the requirements of the applicable building code.
This product is approved as described herein, and has been designed to comply with the Florida building Code including the High Velocity Hurricane Zone.

DESCRIPTION: ESD-603D Louver

APPROVAL DOCUMENT: Drawing No.**MD-8**, Sheets 1 through 5 of 5, titled "ESD-603D Louver," dated 06/05/01 with last revision on 07/27/01, prepared by Greenheck Fan Corporation. signed and sealed by L.D. Rice, PE, bearing the Miami-Dade County Product Control Renewal stamp with the NOA number and expiration date by the Miami-Dade County Product Control Division.

MISSILE IMPACT RATING: Large & Small Missile.

LABELING: Each unit shall bear a permanent label with the manufacturer's name or logo, city, state and following statement: "Miami-Dade County Product Control Approved or MDCPCA", unless otherwise noted herein.

RENEWAL of this NOA shall be considered after a renewal application has been filed and there has been no change in the applicable building code negatively affecting the performance of this product.

TERMINATION of this NOA will occur after the expiration date or if there has been a revision or change in the materials, use, and/or manufacture of the product or process. Misuse of this NOA as an endorsement of any product, for sales, advertising or any other purposes shall automatically terminate this NOA. Failure to comply with any section of this NOA shall be cause for termination and removal of NOA.

ADVERTISEMENT: The NOA number preceded by the words Miami-Dade County, Florida, and followed by the expiration date may be displayed in advertising literature. If any portion of the NOA is displayed, then it shall be done in its entirety.

INSPECTION: A copy of this entire NOA shall be provided to the user by the manufacturer or its distributors and shall be available for inspection at the job site at the request of the Building Official.

This NOA renews NOA # 00-0929.13 and consists of this page evidence page as well as approval document mentioned above.

The submitted documentation was reviewed by **Candido E. Font PE.**

08/03/06

PRODUCT CONTROL ACCEPTED

NOA No: 06-0526.02
Expiration Date: September 06, 2011
Approval Date: August 03, 2006
Page 1

Greenheck Fan Corporation.

NOTICE OF ACCEPTANCE: EVIDENCE PAGE

A. DRAWINGS.

1. Drawing prepared by Greenheck Fan Corporation, titled "ESD-603D Louver," drawing No. MD-8, Sheets 1 through 5 of 5 dated 06/05/2001 with last revision on 07/27/2001, signed and sealed by L. D. Rice, PE.

B. TESTS.

1. Test report on Large Missile Impact Test per PA 201, Cyclic Wind Pressure Test per PA 203, Uniform Static Air Pressure Test per PA 202 and Wind Driven Rain Test Per PA 100(A) of "Specimens 1, 2, 3 & 4: ESD-603D Louver and Specimens 5A & 5B: ESD-603D / HCD-240 Louver/Damper Assembly", prepared by Architectural Testing, Inc., report No. 01-37834.01, dated 01/15/01, signed and sealed by A. N. Reeves, PE

C. CALCULATIONS.

1. Louver Calculations prepared by Greenheck Louver, pages 1 & 2, signed and sealed by L.D. Rice, PE.
2. Justification of Product Variation from Tested Units, prepared by Greenheck Fan Corporation, on 05/08/2001, revised on 07/27/2001, pages 1 to 11 of 11, signed and sealed by L. D. Rice, PE.

D. QUALITY ASSURANCE.

1. Building Code Compliance Office.

E. STATEMENTS

1. Test compliance letter issued by Architectural Testing, Inc., on 01/17/2001, signed and sealed by A. N. Reeves, PE.
2. Code compliance letter issued by Rice Engineering on 05/17, 2001, signed and sealed by L. D. Rice, PE.
3. No change letter issued by Greenheck Fan Corporation on 05/04/06 and signed by M. L. Watz.

08/03/06

Candido F. Font PE.
Sr. Product Control Examiner
NOA No 06-0526.02
Expiration Date: September 06, 2011
Approval: Date: August 03, 2006

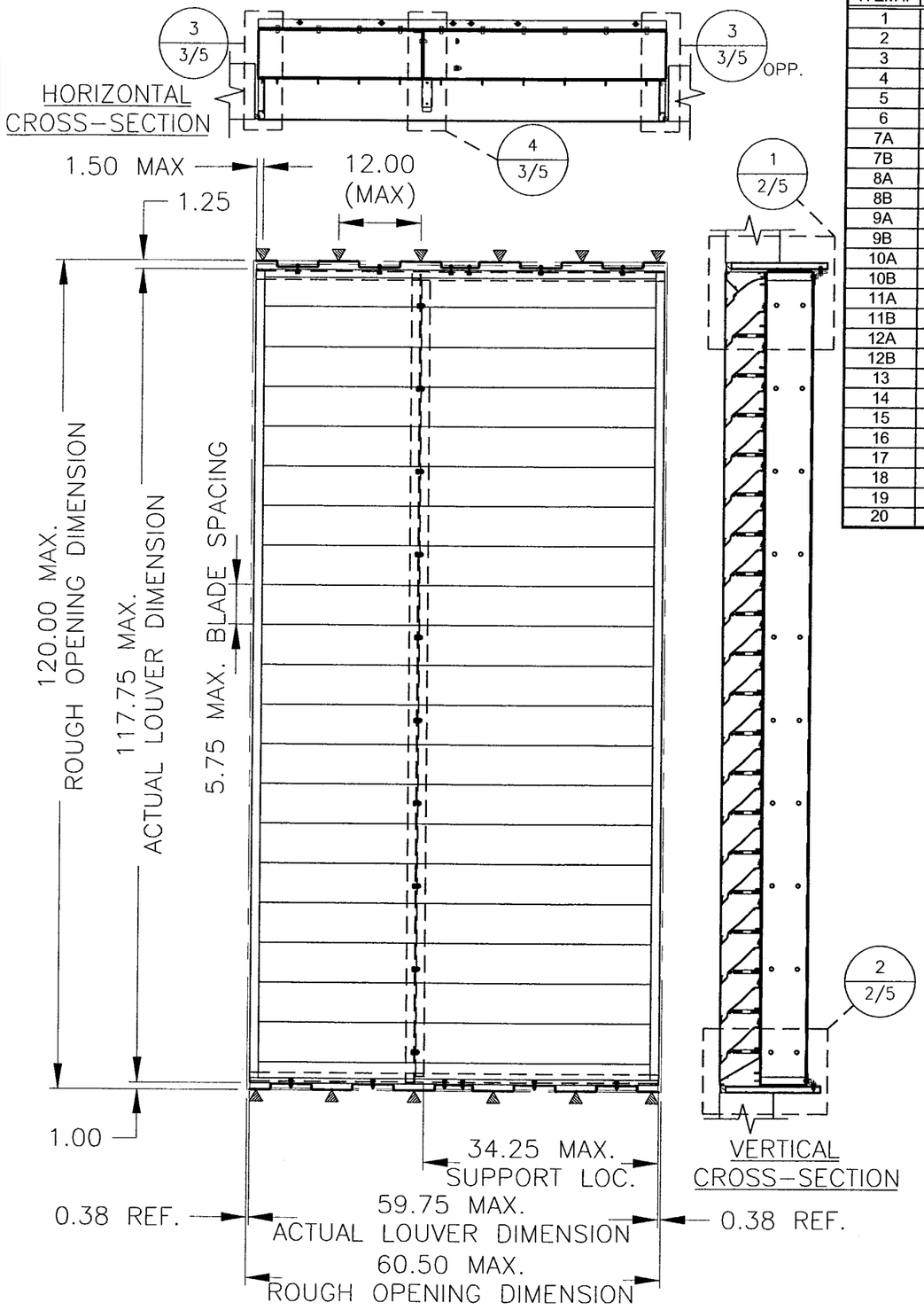

ITEM #	QUANTITY	DESCRIPTION	MATERIAL	DIMENSIONS
1	1	HEAD	6063-T5 EXTR. ALUM.	.125 WALLx5.73Dx5.34H
2	5.75 MAX.SPACING	BLADE	6063-T5 EXTR. ALUM.	.125 WALLx5.73Dx6.53H
3	1	SILL	6063-T5 EXTR. ALUM.	.125 WALLx6.08Dx6.54H
4	1/BLADE	BLADE BRACKET (OVER 36" WIDE)	6063-T5 EXTR. ALUM.	.081 WALLx1.5Wx4.69Dx4.80H
5	1/BLADE	BLADE BRACKET REINFORCEMENT	6063-T5 EXTR. ALUM.	.063 WALLx.5x1.5x4
6	2	JAMB	6063-T5 EXTR. ALUM.	.125 WALLx5.94Dx1.25W
7A	2 MIN.	TOP/BOT ANCHOR PLATE W/7" FRAME	A569 STL. or A240 SS	12GAx.94Hx14.13D
7B	2 MIN.	TOP/BOT ANCHOR PLATE W/3" FRAME	A569 STL. or A240 SS	12GAx.94Hx 9.63D
8A	2	TOP/BOT STRUCT. SUP. W/7" FRAME	A569 STL. or A240 SS	10GAx1.25x2x7D
8B	2	TOP/BOT STRUCT. SUP. W/3" FRAME	A569 STL. or A240 SS	10GAx1.25x2x3D
9A	2	SIDE STRUCT. SUP. W/7" FRAME	A569 STL. or A240 SS	10GAx1.25x2x7D
9B	2	SIDE STRUCT. SUP. W/3" FRAME	A569 STL. or A240 SS	10GAx1.25x2x3D
10A	1	CENTER STRUCT. ANGLE W/7" FRAME	A569 STL. or A240 SS	10GAx2Wx6.5D
10B	1	CENTER STRUCT. ANGLE W3" FRAME	A569 STL. or A240 SS	10GAx2Wx2.5D
11A	1	BLADE SUPPORT ANGLE W/7" FRAME	A569 STL. or A240 SS	10GAx1.25Wx6.5D
11B	1	BLADE SUPPORT ANGLE W/3" FRAME	A569 STL. or A240 SS	10GAx1.25Wx2.5D
12A	2	2" ANCHORING ANGLE for ROH >48"	ASTM A36 HR STL.	.25x2x2
12B	2	1-1/2" ANCHORING ANGLE for ROH <=48"	ASTM A36 HR STL.	.25x1.5x1.5
13	2/BLD. BRKT	SMS TPH	18-8 SS	#8-18x1" TYPE AB
14	6" O.C.	SMS TPH	18-8 SS	#10-16x1" TYPE AB
15	2/BLD. BRKT	SELF-PIERCING RIVET	ZP	3/16x7/32
16	12" O.C.	ZP HH SFF	SAE J429, GR. 5 or ASTM F593	3/8-16x.75 Min.
17	AS REQD.	HEX NUT	SAE J995 or ASTM F594	3/8-16
18	MAX 12" SPACING	INSTALLATION FASTENERS (BY OTHERS)	304SS	3/8-16x3 HILTI KBII 38-3
19	MAX 12" SPACING	INSTALLATION FASTENERS (BY OTHERS)	ASTM A307	3/8-16x1
20	AS REQD.	SEALANT (BY OTHERS)	TREMCO SPECTREM 1	

GENERAL NOTES:

1. Maximum allowable single panel size is 59.75" x 117.75" for a maximum 60.5" x 120" rough opening.
2. Maximum wall opening is of unlimited width with an opening height not to exceed 120". The opening can be covered with multiple louver panels of 59.75" width or less.
3. Center blade support is used on all louvers having a rough opening width over 36". Louver blade span cannot exceed 34.25" in any configuration.
4. ESD-603D is approved for installation into masonry, minimum 2000 psi concrete and steel frame openings. Louver construction and fastener locations are the same for all substrates. Opening frame must be designed to withstand the loads transferred from louver.
5. Louver is qualified for a maximum design load of ±138 pounds per square foot (psf).
6. All anchoring fasteners must be as specified and must be installed as shown in these drawings.
7. The ESD-603D louver has been tested in accordance with Miami-Dade County Protocols PA201-94 (impact), PA202-94 (structural integrity), and PA203-94 (cyclic fatigue). Louver is intended for use where the space behind is designed for water penetrating into the room, and the room will house water-resistant equipment, components or supplies.
8. Louver design, testing, and installation conforms to the South Florida Building Code.
9. Louver is to be anchored at head and sill only. No anchorage is required at the jambs.
10. Louver frame jambs are mitered at the bottom and square cut at the top. Jambs are stitchwelded, two places, and fastened with (2) #10 x 1" Torx pan head screws at head and sill.

DRAWN BY TESKE	DATE 6/5/2001		REV 1
SCALE 1/20	REVISION DATE 7/27/2001		
SHEET NO. 1 of 5		CAD DRAWING NO. MD-8	

GREENHECK
P.O.BOX 410 SCHOFIELD, WISCONSIN 54476-0410

TITLE ESD-603D LOUVER

NOT REVIEWED
Approved for Florida
06-0526.02
09/06/11
By
Miami-Dade Product Control Division

APPROVED AS COMPLYING WITH THE SOUTH FLORIDA BUILDING CODE
DATE SEP 06 2001
BY
PRODUCT CONTROL DIVISION
BUILDING CODE COMPLIANCE OFFICE
ACCEPTANCE NO. 00-0929.13

Lorenzo Rice
AUG 17 2001

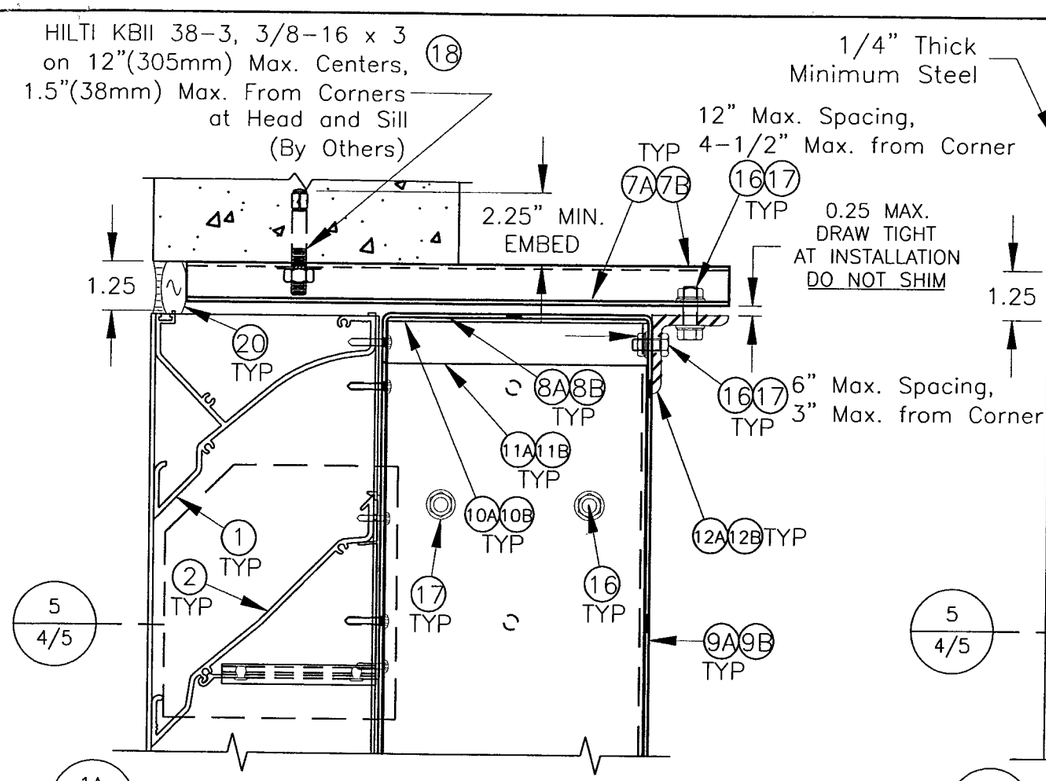

1A 2/5 INSTALLATION INTO CONCRETE/MASONRY

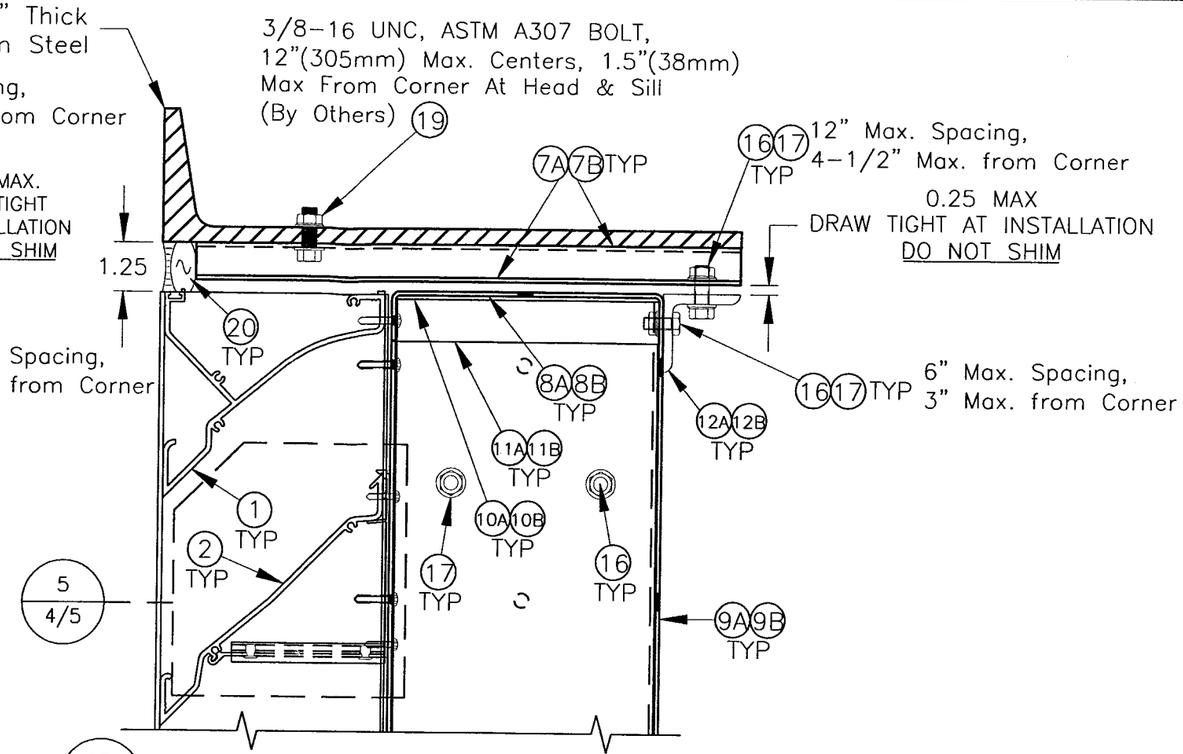

1B 2/5 INSTALLATION INTO STEEL FRAMED OPENING

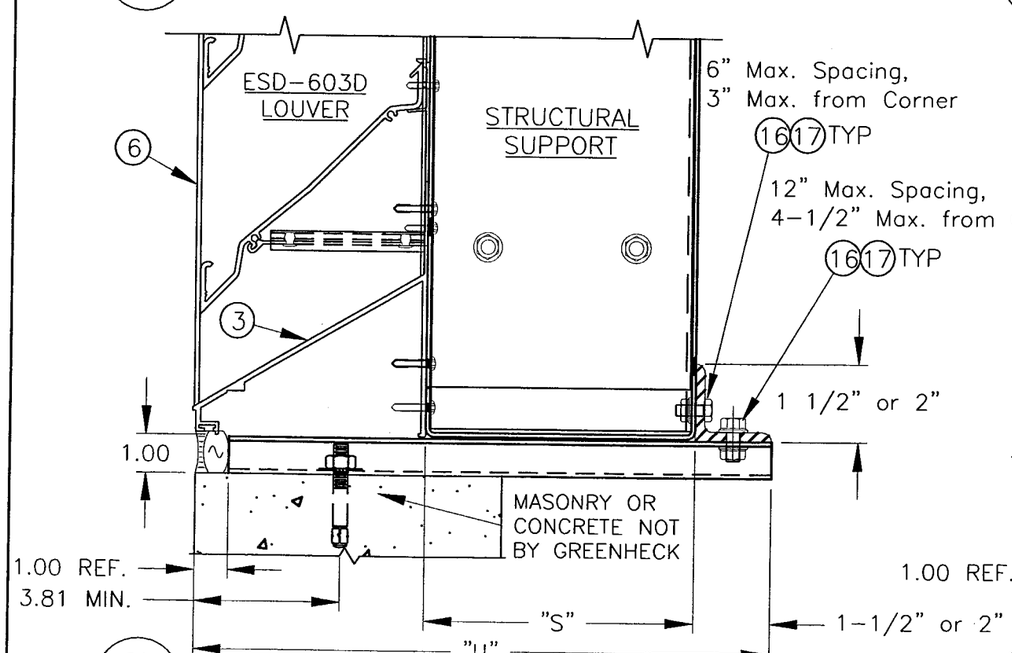

2A 2/5 INSTALLATION INTO CONCRETE/MASONRY

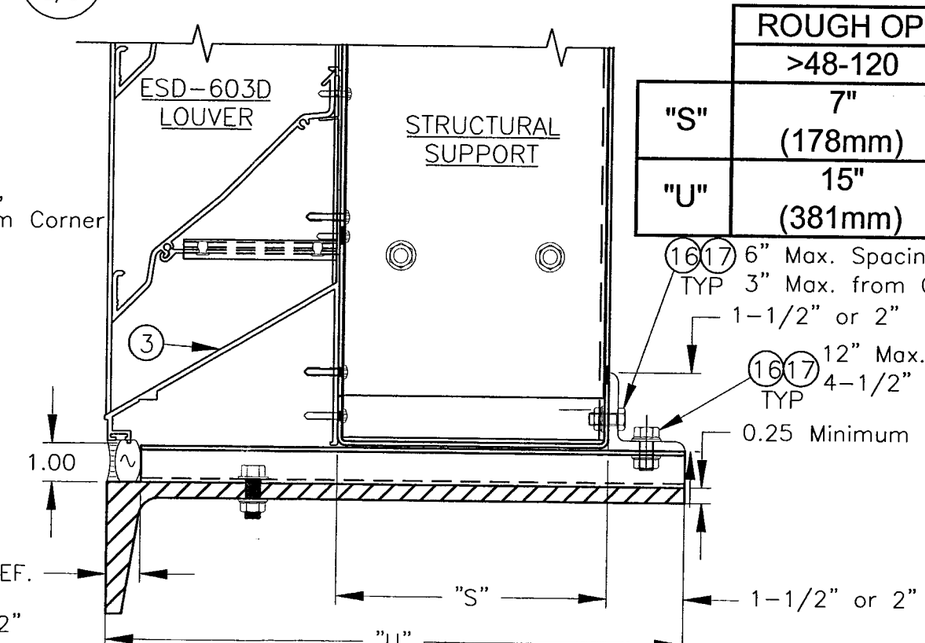

2B 2/5 INSTALLATION INTO STEEL FRAMED OPENING

	ROUGH OPENING HEIGHT	
	>48-120	<=48
"S"	7" (178mm)	3" (76mm)
"U"	15" (381mm)	10 1/2" (267mm)

PRODUCT REVIEWED
as complying with the Florida Building Code
Acceptance No. 06-0526.02
Expiration Date 09/06/11
By
Miami-Dade Product Control Division

DRAWN BY TESKE	DATE 6/5/2001
SCALE 1/2	REVISION DATE 7/27/2001
SHEET NO. 2 of 5	REV 1
CAD DRAWING NO. MD-8	

GREENHECK
P.O.BOX 410 SCHOFIELD, WISCONSIN 54476-0410

TITLE ESD-603D LOUVER

APPROVED AS COMPLYING WITH THE SOUTH FLORIDA BUILDING CODE
DATE SEP 06 2001
BY
PRODUCT CONTROL DIVISION
BUILDING CODE COMPLIANCE OFFICE
ACCEPTANCE NO. 00-0929.13

L. DAVID RICO
AUG 07 2001

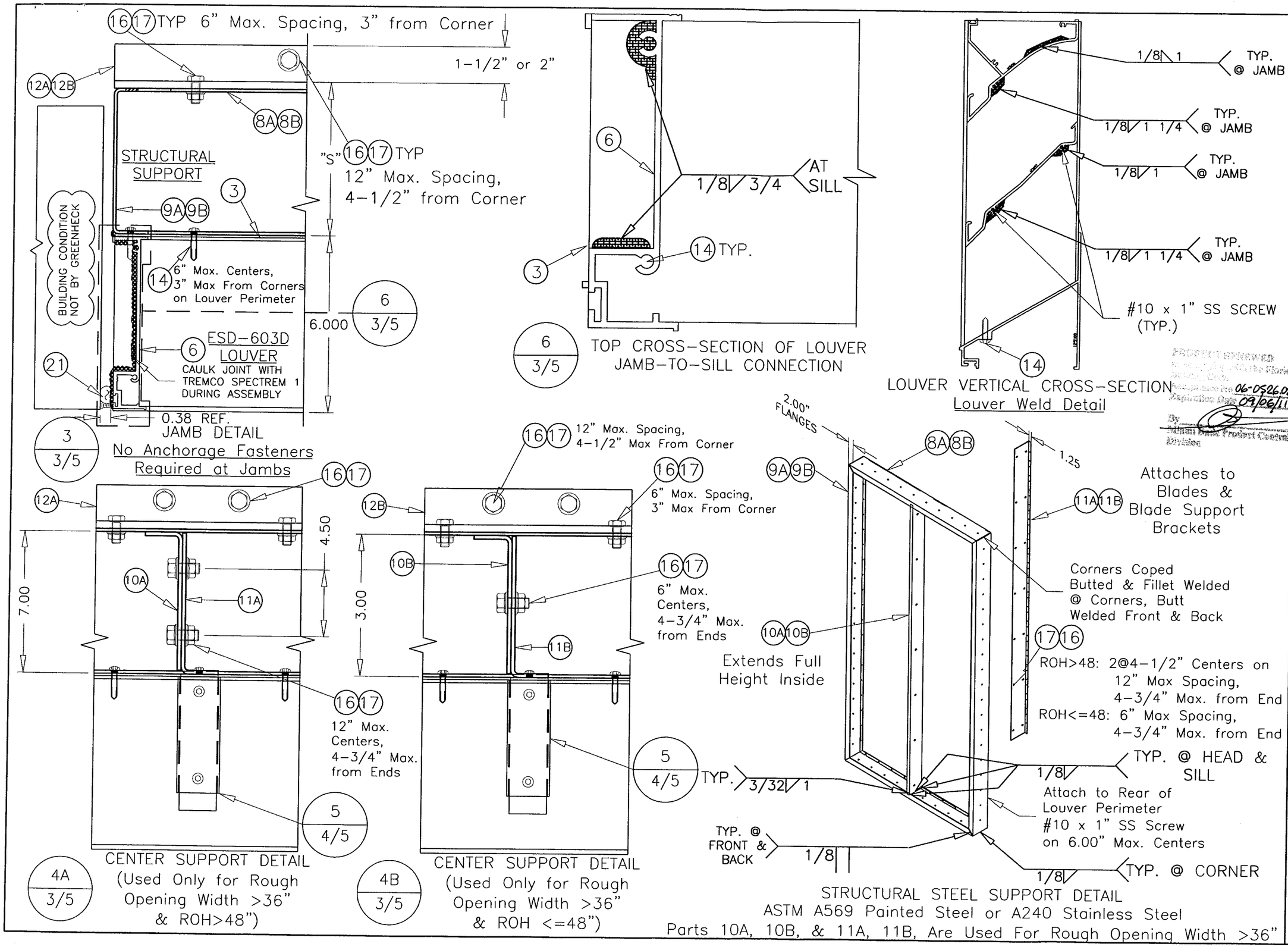

PRODUCT RENEWED
Approved by the Florida Building Code
Acceptance No. 06-0526.02
Expiration Date 09/06/11
By
Miami Dade Product Control Division

DRAWN BY TESKE	DATE 6/5/2001
SCALE 1/2	REVISION DATE 7/27/2001
SHEET NO. 3 of 5	REV 1
CAD DRAWING NO. MD-8	

GREENHECK
P.O.BOX 410 SCHOFIELD, WISCONSIN 54476-0410

TITLE ESD-603D LOUVER

APPROVED AS COMPLYING WITH THE SOUTH FLORIDA BUILDING CODE
DATE SEP 0 6 2001
BY
PRODUCT CONTROL DIVISION
BUILDING CODE COMPLIANCE OFFICE
ACCEPTANCE NO. 00-0929.13

L. DAVID RICE
AUG 07 2001

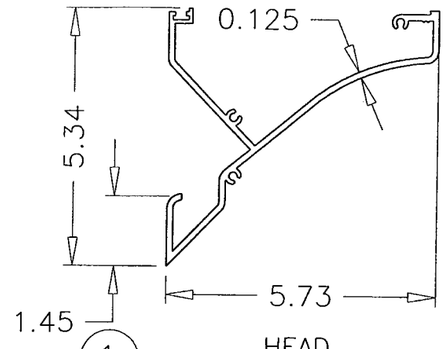

1 HEAD
6063–T5 Aluminum

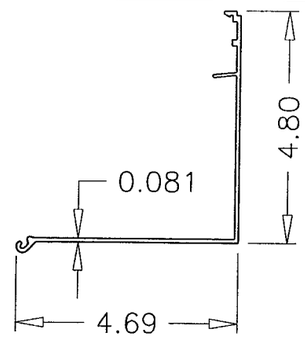

4 BLADE BRACKET
6063–T5 Aluminum
(Used only for Rough Opening Width>36")
See Assembly Detail

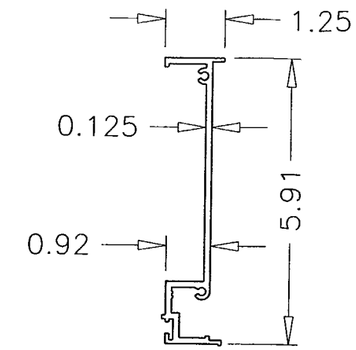

6 JAMB
6063–T5 Aluminum

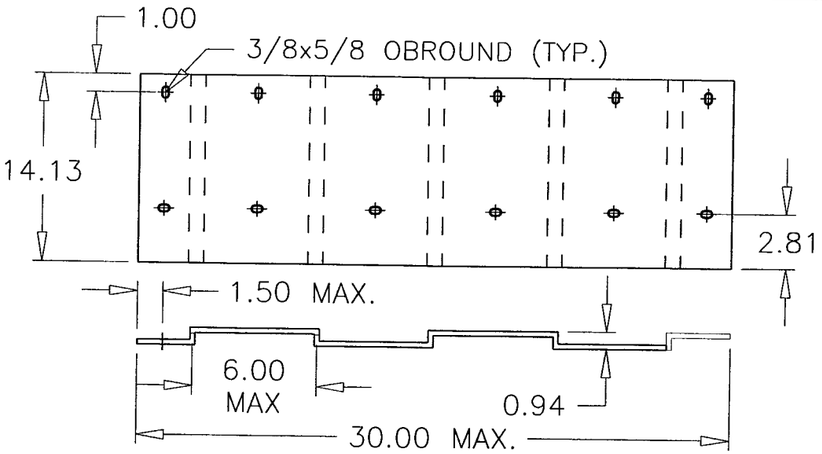

7A TOP/BOTTOM ANCHOR PLATE
12 ga.(.105) ASTM A569 Painted Steel or
ASTM A240 Stainless Steel
(Used for rough opening height >48",<=120)

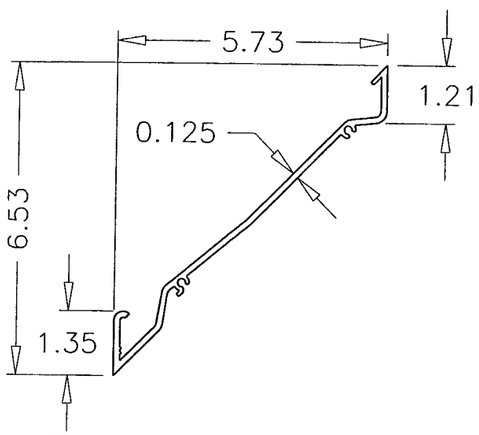

2 BLADE
6063–T5 Aluminum

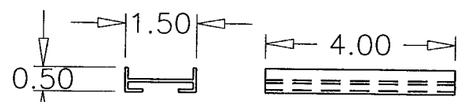

5 BLADE BRACKET REINFORCEMENT
6063–T5 Aluminum
(Used only for Rough Opening Width>36")
See Assembly Detail

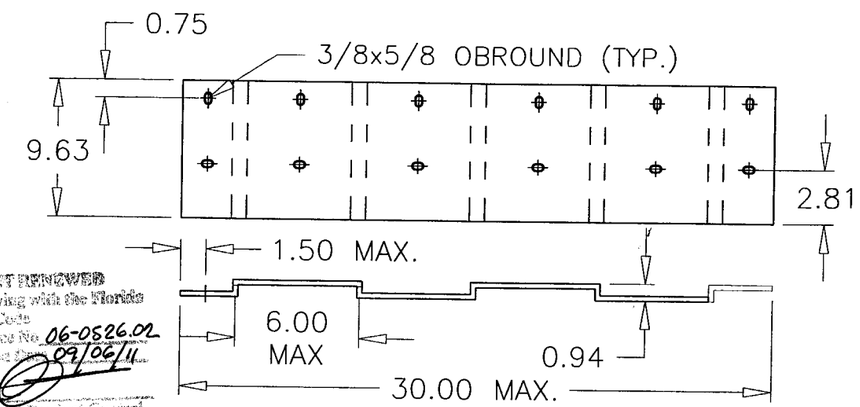

7B TOP/BOTTOM ANCHOR PLATE
12 ga.(.105) ASTM A569 Painted Steel or
ASTM A240 Stainless Steel
(Used for rough opening height <=48")

PRODUCT REINFORCED
As complying with the Florida Building Code
Acceptance No. 06-0526.02
Expiration Date 09/06/11
By: Miami-Dade Product Control Division

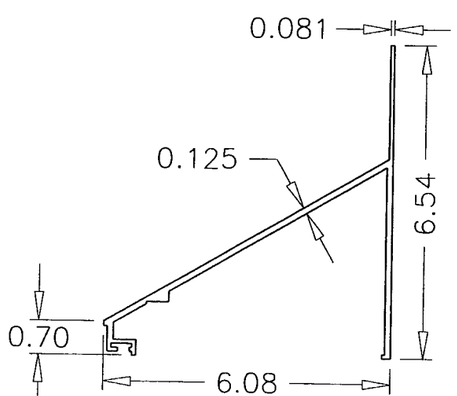

3 SILL
6063–T5 Aluminum

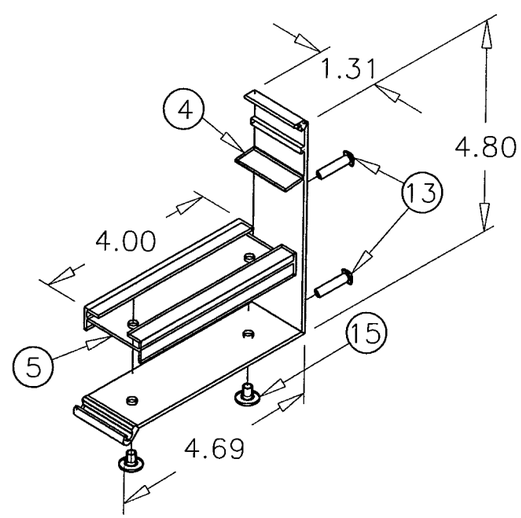

5/4/5 BLADE SUPPORT BRACKET ASSEMBLY
(Used Only for Rough Opening Width >36")

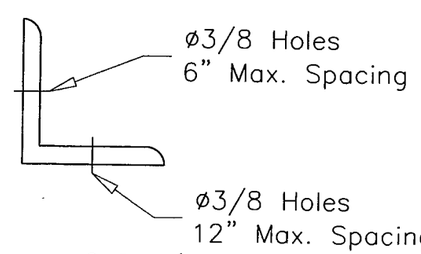

12A 2x2x1/4 Anchoring Angle
ASTM A36 Painted Steel
Used for R.O.H. >48"

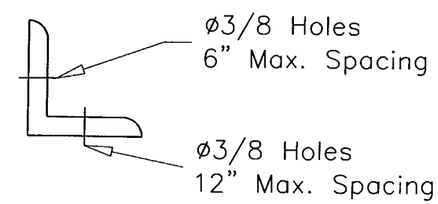

12B 1.5x1.5x1/4 Anchoring Angle
ASTM A36 Painted Steel
Used Only when R.O.H. <=48"

DRAWN BY TESKE	DATE 6/5/2001		REV 1
SCALE 1/2	REVISION DATE 7/27/2001		
SHEET NO. 4 of 5		CAD DRAWING NO. MD-8	

GREENHECK
P.O.BOX 410 SCHOFIELD, WISCONSIN 54476-0410

TITLE ESD-603D LOUVER

APPROVED AS COMPLYING WITH THE SOUTH FLORIDA BUILDING CODE
DATE SEP 06 2001
BY
PRODUCT CONTROL DIVISION
BUILDING CODE COMPLIANCE OFFICE
ACCEPTANCE NO. 00-0929.13

L. Aaron Rice
AUG 07 2001

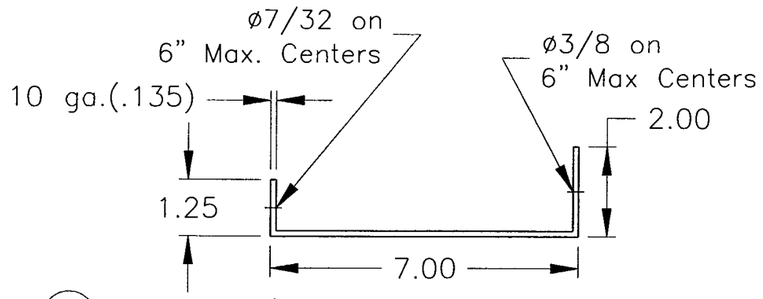

8A TOP/BOTTOM STRUCTURAL SUPPORT
ASTM A569 Painted Steel or A240 Stainless Steel
(Used for Rough Opening Height >48",<=120")

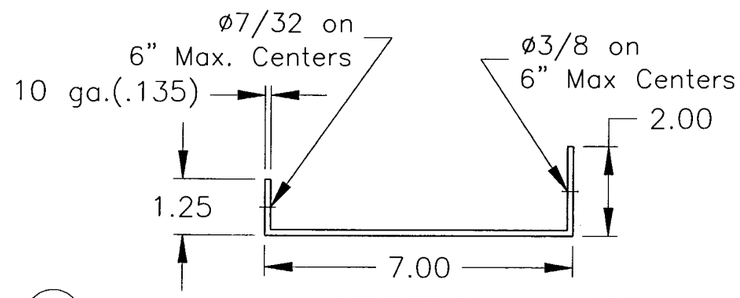

9A SIDE STRUCTURAL SUPPORT
ASTM A569 Painted Steel or A240 Stainless Steel
(Used for Rough Opening Height >48",<=120")

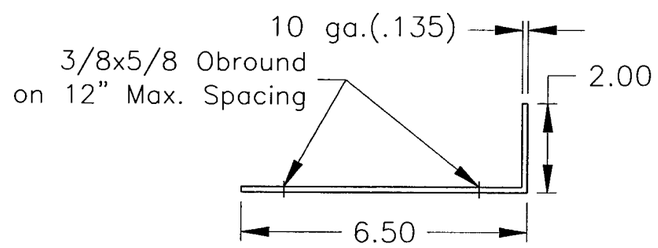

10A CENTER STRUCTURAL SUPPORT ANGLE
ASTM A569 Painted Steel or A240 Stainless Steel
(Used for Rough Opening Height >48",<=120")

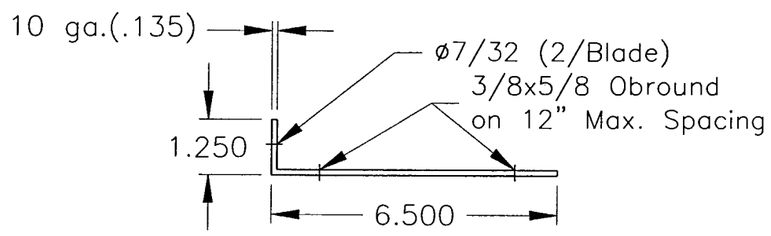

11A BLADE SUPPORT ANGLE
ASTM A569 Painted Steel or A240 Stainless Steel
(Used for Rough Opening Height >48",<=120")

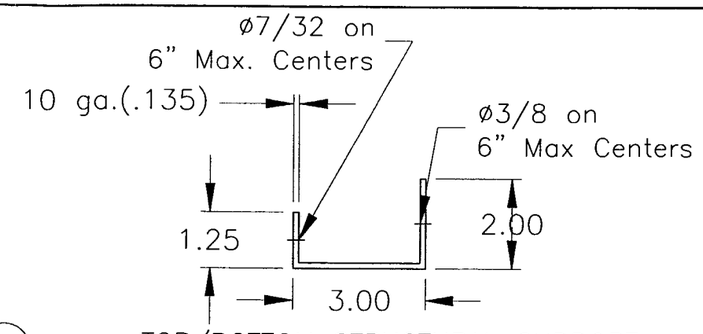

8B TOP/BOTTOM STRUCTURAL SUPPORT
ASTM A569 Painted Steel or A240 Stainless Steel
(Used for Rough Opening Height <=48")

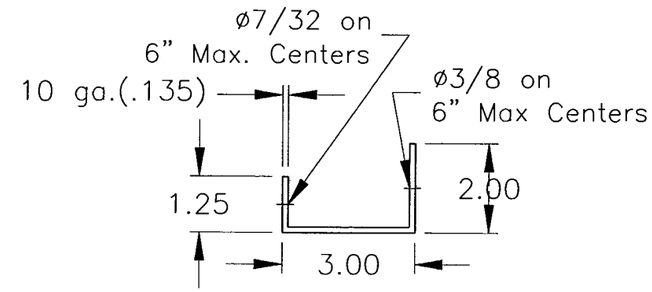

9B SIDE STRUCTURAL SUPPORT
ASTM A569 Painted Steel or A240 Stainless Steel
(Used for Rough Opening Height <=48")

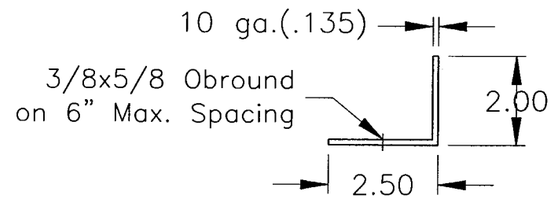

10B CENTER STRUCTURAL SUPPORT ANGLE
ASTM A569 Painted Steel or A240 Stainless Steel
(Used for Rough Opening Height <=48")

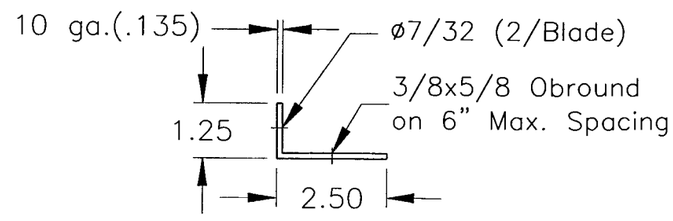

11B BLADE SUPPORT ANGLE
ASTM A569 Painted Steel or A240 Stainless Steel
(Used for Rough Opening Height <=48")

PRODUCT RENEWED
as complying with the Florida
Building Code
Acceptance No. 06-0526.02
Expiration Date 09/06/11
By
Miami Dade Product Control
Division

DRAWN BY TESKE	DATE 6/5/2001
SCALE 1/2	REVISION DATE 7/27/2001
SHEET NO. 5 of 5	REV 1
CAD DRAWING NO. MD-8	

GREENHECK
P.O.BOX 410 SCHOFIELD,
WISCONSIN 54476-0410

TITLE ESD-603D LOUVER

APPROVED AS COMPLYING WITH THE
SOUTH FLORIDA BUILDING CODE
DATE SEP 0 6 2001
BY
PRODUCT CONTROL DIVISION
BUILDING CODE COMPLIANCE OFFICE
ACCEPTANCE NO. 00-0929.13

LIDAVID RICO
AUG 07 2001