MIAMI-DADE

BUILDING CODE COMPLIANCE OFFICE (BCCO)
PRODUCT CONTROL DIVISION

MIAMI-DADE COUNTY, FLORIDA
METRO-DADE FLAGLER BUILDING
140 WEST FLAGLER STREET, SUITE 1603
MIAMI, FLORIDA 33130-1563
(305) 375-2901 FAX (305) 375-2908

NOTICE OF ACCEPTANCE (NOA)

Eagle Roofing Products LLC
1575 East C.R. 470
Sumterville, FL 33585

SCOPE:

This NOA is being issued under the applicable rules and regulations governing the use of construction materials. The documentation submitted has been reviewed by the BCCO and accepted by the Building Code and Product Review Committee to be used in Miami Dade County and other areas where allowed by the Authority Having Jurisdiction (AHJ).

This NOA shall not be valid after the expiration date stated below. The Miami-Dade County Product Control Division (In Miami Dade County) and/or the AHJ (in areas other than Miami Dade County) reserve the right to have this product or material tested for quality assurance purposes. If this product or material fails to perform in the accepted manner, the manufacturer will incur the expense of such testing and the AHJ may immediately revoke, modify, or suspend the use of such product or material within their jurisdiction. BORA reserves the right to revoke this acceptance, if it is determined by Miami-Dade County Product Control Division that this product or material fails to meet the requirements of the applicable building code.

This product is approved as described herein, and has been designed to comply with the Florida Building Code, and the High Velocity Hurricane Zone of the Florida Building Code.

DESCRIPTION: Capistrano Concrete Tile

LABELING: Each unit shall bear a permanent label with the manufacturer's name or logo, city, state and following statement: "Miami-Dade County Product Control Approved", unless otherwise noted herein.

RENEWAL of this NOA shall be considered after a renewal application has been filed and there has been no change in the applicable building code negatively affecting the performance of this product.

TERMINATION of this NOA will occur after the expiration date or if there has been a revision or change in the materials, use, and/or manufacture of the product or process. Misuse of this NOA as an endorsement of any product, for sales, advertising or any other purposes shall automatically terminate this NOA. Failure to comply with any section of this NOA shall be cause for termination and removal of NOA.

ADVERTISEMENT: The NOA number preceded by the words Miami-Dade County, Florida, and followed by the expiration date may be displayed in advertising literature. If any portion of the NOA is displayed, then it shall be done in its entirety.

INSPECTION: A copy of this entire NOA shall be provided to the user by the manufacturer or its distributors and shall be available for inspection at the job site at the request of the Building Official.

This NOA consists of pages 1 through 6.
The submitted documentation was reviewed by Alex Tigera.

PRODUCT CONTROL ACCEPTED

NOA No.: 06-0526.08
Expiration Date: 10/05/11
Approval Date: 10/05/06

ROOFING ASSEMBLY APPROVAL

Category:	Roofing
Sub-Category:	07320 Roofing Tiles
Material:	Concrete
Deck Type:	Wood

1. SCOPE

This approves a new roofing system using "Capistrano Concrete Tile" as manufactured by Eagle Roofing Products LLC in Sumterville, FL. and described in Section 2 of this Notice of Acceptance. For locations where the pressure requirements, as determined by applicable Building Code does not exceed the design pressure values obtained by calculations in compliance with RAS 127 using the values listed in section 4 herein. The attachment calculations shall be done as a moment based system.

2. PRODUCT DESCRIPTION

Manufactured by Applicant	Dimensions	Test Specifications	Product Description
Capistrano Concrete Tile	L = 17" W = 12 ¼" Thickness = ½"	TAS 112	High profile concrete roof tile. For direct deck or battened nail-on applications.
Trim Pieces	l = varies w = varies varying thickness	TAS 112	Accessory trim, clay roof pieces for use at hips, rakes, ridges and valley terminations. Manufactured for each tile profile.

2.1 SUBMITTED EVIDENCE:

Test Agency	Test Identifier	Test Name/Report	Date
PRI Asphalt Technologies	ERPF-001-02-02	TAS-112	Aug. 2006
Redland Technologies	7161-03 Appendix III	Static Uplift Testing TAS 102 & 102(A)	Dec. 1991
Redland Technologies	Letter Dated Aug. 1, 1994	Wind Tunnel Testing TAS 108 (Nail-On)	Aug. 1994
Redland Technologies	P09647-01	Wind Tunnel Testing TAS 108 (Mortar Set)	Aug. 1994
Redland Technologies	P0402	Withdrawal Resistance Testing of screw vs. smooth shank nails	Sept. 1993
The Center for Applied Engineering, Inc.	94-083	Static Uplift Testing TAS 101 (Adhesive Set)	April 1994
The Center for Applied Engineering, Inc.	94-084	Static Uplift Testing TAS 101 (Mortar Set)	May 1994

The Center for Applied Engineering, Inc.	25-7094-(3, 6 & 9)	Static Uplift Testing TAS 102	Oct. 1994
The Center for Applied Engineering, Inc.	25-7120-(1 & 2)	Static Uplift Testing TAS 102	Nov. 1994
The Center for Applied Engineering, Inc.	25-7183-(3 & 4)	Static Uplift Testing TAS 102	Feb. 1995
The Center for Applied Engineering, Inc.	25-7214-(3, 4, &7)	Static Uplift Testing TAS 102	March, 1995
The Center for Applied Engineering, Inc.	25-7804-4	Static Uplift Testing TAS 102	Sep. 1996
Celotex Corporation Testing Services	520111-3	Static Uplift Testing TAS 101	Dec. 1998
Celotex Corporation Testing Services	520191-2-1	Static Uplift Testing TAS 101	March 1999
Walker Engineering, Inc.	Calculations	Aerodynamic Multiplier	Sep. 2006
Walker Engineering, Inc.	Calculations	Restoring Moment Due to Gravity	Sep. 2006

3. LIMITATIONS

3.1 Fire classification is not part of this acceptance.

3.2 For mortar or adhesive set tile applications, a static field uplift test shall be performed in accordance with TAS 106.

3.3 Applicant shall retain the services of a Miami-Dade County Certified Laboratory to perform quarterly test in accordance with TAS 112, appendix 'A'. Such testing shall be submitted to the Building Code Compliance Office for review.

3.4 Minimum underlayments shall be in compliance with the applicable Roofing Applications Standards listed section 4.1 herein.

3.5 30/90 hot mopped underlayment applications may be installed perpendicular to the roof slope unless stated otherwise by the underlayment material manufacturers published literature.

3.6 This acceptance is for wood deck applications. Minimum deck requirements shall be in compliance with chapter 29 of the SFBC.

4. INSTALLATION

4.1 Eagle Roofing Products LLC Capistrano Concrete Tile and its components shall be installed in strict compliance with Roofing Application Standard RAS 118, RAS 119 and RAS 120.

4.2 Data For Attachment Calculations

Table 1: Average Weight (W) and Dimensions (l x w)

Tile Profile	Weight-W (lbf)	Length-l (ft)	Width-w (ft)
Capistrano Concrete Tile	10	1.417	1.04

Table 2: Aerodynamic Multipliers - λ (ft^3)

Tile Profile	λ (ft^3) Batten Application	λ (ft^3) Direct Deck Application
Capistrano Concrete Tile	0.300	0.277

Table 3: Restoring Moments due to Gravity - M_g (ft-lbf)

Tile Profile	3":12"		4":12"		5":12"		6":12"		Greater than 7":12"	
	Battens	Direct Deck	Battens	Direct Deck	Battens	Direct Deck	Battens	Direct Deck	Battens	Direct Deck
Capistrano Concrete Tile	6.68	6.99	6.57	6.88	6.44	6.73	6.28	6.56	6.10	6.38

Table 4: Attachment Resistance Expressed as a Moment - M_r (ft-lbf) for Nail-On Systems

Tile Profile	Fastener Type	Direct Deck (min 15/32" plywood)	Direct Deck (min. 19/32" plywood)	Battens
Capistrano Concrete Tile	2-10d Ring Shank Nails	28.6	41.2	N/A
	1-10d Smooth or Screw Shank Nail	5.1	6.8	N/A
	2-10d Smooth or Screw Shank Nails	6.9	9.2	N/A
	1 #8 Screw	20.7	20.7	N/A
	2 #8 Screw	43.2	43.2	N/A
	1-10d Smooth or Screw Shank Nail (Field Clip)	23.1	23.1	N/A
	1-10d Smooth or Screw Shank Nail (Eave Clip)	29.3	29.3	N/A
	2-10d Smooth or Screw Shank Nails (Field Clip)	27.6	27.6	N/A
	2-10d Smooth or Screw Shank Nails (Eave Clip)	38.1	38.1	N/A
	2-10d Ring Shank Nails[1]	33.1	48.1	N/A

1. Installation with a 3" tile headlap and fasteners are located a min. of 2½" from head of tile.

Table 5: Attachment Resistance Expressed as a Moment M_f (ft-lbf) for Two Patty Adhesive Set Systems		
Tile Profile	**Tile Application**	**Minimum Attachment Resistance**
Capistrano Concrete Tile	Adhesive	29.3[2]
1 See manufactures component approval for installation requirements.		
2 Flexible Products Company TileBond Average weight per patty 10.7 grams. Polyfoam Product, Inc. Average weight per patty 8 grams.		

Table 5A: Attachment Resistance Expressed as a Moment - M_f (ft-lbf) for Single Patty Adhesive Set Systems		
Tile Profile	**Tile Application**	**Minimum Attachment Resistance**
Capistrano Concrete Tile	Polyfoam PolyPro™	66.5[3]
	Polyfoam PolyPro™	38.7[4]
3 Large paddy placement of 63grams of PolyPro™.		
4 Medium paddy placement of 24grams of PolyPro™.		

Table 5B: Attachment Resistance Expressed as a Moment - M_f (ft-lbf) for Mortar Set Systems		
Tile Profile	**Tile Application**	**Attachment Resistance**
Capistrano Concrete Tile	Mortar Set[5]	24.5
5 Tile-Tite Roof Tile Mortar.		

5. LABELING

All tiles shall bear the imprint or identifiable marking of the manufacturer's name or logo **(See Detail Below)**, or following statement: "Miami-Dade County Product Control Approved".

EAGLE®
FLORIDA

CAPISTRANO CONCRETE ROOF TILE LABEL, SUMTERVILLE PLANT
(LOCATED ON UNDERSIDE OF TILE)

6. BUILDING PERMIT REQUIREMENTS

6.1 Application for building permit shall be accompanied by copies of the following:

6.1.1 This Notice of Acceptance.

6.1.2 Any other documents required by the Building Official or applicable building code in order to properly evaluate the installation of this system.

PROFILE DRAWING

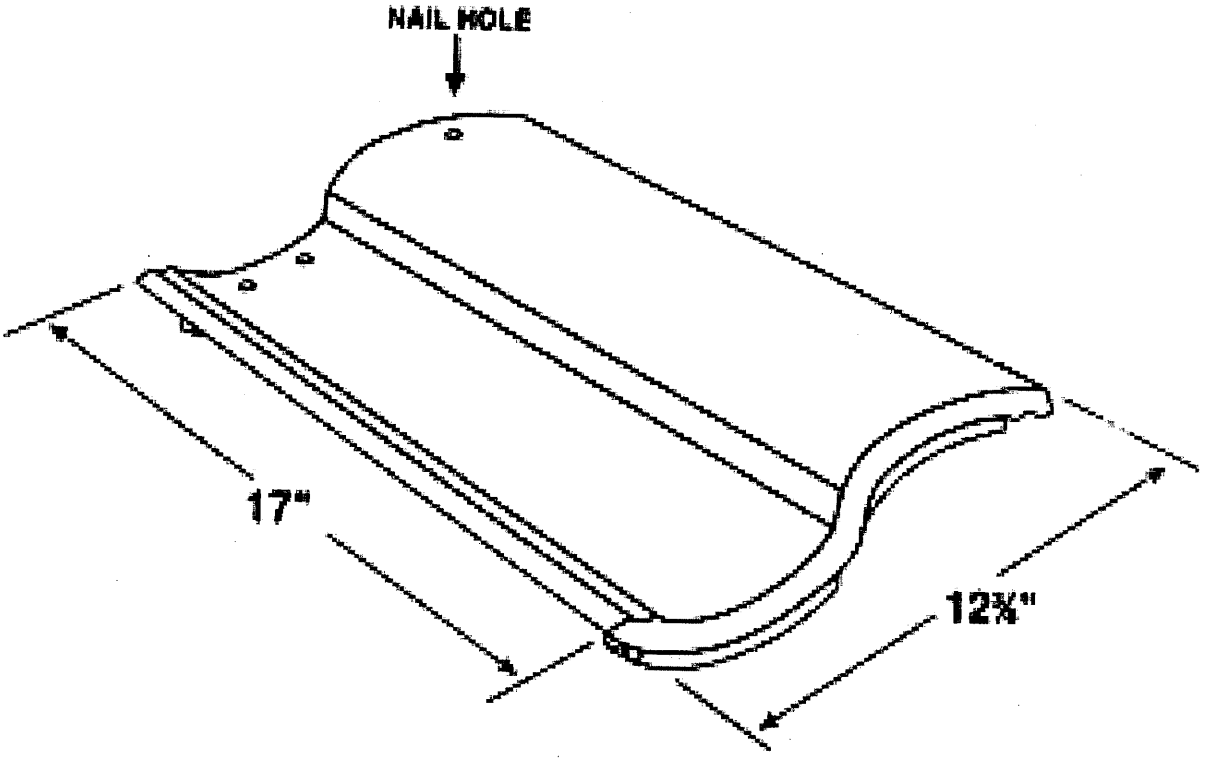

CAPISTRANO CONCRETE ROOF TILE

END OF THIS ACCEPTANCE