MIAMI-DADE COUNTY
BUILDING CODE COMPLIANCE OFFICE (BCCO)
PRODUCT CONTROL DIVISION

MIAMI-DADE COUNTY, FLORIDA
METRO-DADE FLAGLER BUILDING
140 WEST FLAGLER STREET, SUITE 1603
MIAMI, FLORIDA 33130-1563
(305) 375-2901 FAX (305) 375-2908
www.buildingcodeonline.com

NOTICE OF ACCEPTANCE (NOA)

Continental Glass System Inc.
325 West 74 Place
Hialeah, Fl. 33014

SCOPE:
This NOA is being issued under the applicable rules and regulations governing the use of construction materials. The documentation submitted has been reviewed by Miami-Dade County Product Control Division and accepted by the Board of Rules and Appeals (BORA) to be used in Miami Dade County and other areas where allowed by the Authority Having Jurisdiction (AHJ).

This NOA shall not be valid after the expiration date stated below. The Miami-Dade County Product Control Division (In Miami Dade County) and/or the AHJ (in areas other than Miami Dade County) reserve the right to have this product or material tested for quality assurance purposes. If this product or material fails to perform in the accepted manner, the manufacturer will incur the expense of such testing and the AHJ may immediately revoke, modify, or suspend the use of such product or material within their jurisdiction. BORA reserves the right to revoke this acceptance, if it is determined by Miami-Dade County Product Control Division that this product or material fails to meet the requirements of the applicable building code.

This product is approved as described herein, and has been designed to comply with the Florida Building Code, including High Velocity Hurricane Zone of the Florida Building Code.

DESCRIPTION: Series "5000" Aluminum Single Hung Windows w/ wo reinforcement

APPROVAL DOCUMENT: Drawing No. **S.H.-5000-L.M.,** titled "series 5000 Single Hung", prepared by manufacturer, sheets 1 through 7 of 7, dated 08/16/06 with last revision on 09-13-2006, signed and sealed by Kelvyn A. Whitfield, P.E., bearing the Miami-Dade County Product Control Approval stamp with the Notice of Acceptance number and approval date by the Miami-Dade County Product Control Division.

MISSILE IMPACT RATING: Large and Small Missile Impact Resistant

LABELING: Each unit shall bear a permanent label with the manufacturer's name or logo, city, state and following statement: "Miami-Dade County Product Control Approved", unless otherwise noted herein.

RENEWAL of this NOA shall be considered after a renewal application has been filed and there has been no change in the applicable building code negatively affecting the performance of this product.

TERMINATION of this NOA will occur after the expiration date or if there has been a revision or change in the materials, use, and/or manufacture of the product or process. Misuse of this NOA as an endorsement of any product, for sales, advertising or any other purposes shall automatically terminate this NOA. Failure to comply with any section of this NOA shall be cause for termination and removal of NOA.

ADVERTISEMENT: The NOA number preceded by the words Miami-Dade County, Florida, and followed by the expiration date may be displayed in advertising literature. If any portion of the NOA is displayed, then it shall be done in its entirety.

INSPECTION: A copy of this entire NOA shall be provided to the user by the manufacturer or its distributors and shall be available for inspection at the job site at the request of the Building Official.
This NOA consists of this page 1 and evidence sheets E-1, as well as approval document mentioned above.
The submitted documentation was reviewed by **Ishaq I. Chanda, P.E.**

PRODUCT CONTROL ACCEPTED
10/20/06

Continental Glass System Inc.

NOTICE OF ACCEPTANCE: EVIDENCE SUBMITTED

A. DRAWINGS

1. Manufacturer's die drawings and sections.
2. Drawing No. **S.H.-5000-L.M.,** titled "series 5000 Single Hung", prepared by manufacturer, sheets 1 through 7 of 7, dated 08/16/06 with last revision on 09-13-2006, signed and sealed by Kelvyn A. Whitfield, P.E

B. TESTS

1. Test reports on 1) Air Infiltration Test, per PA 202-94
   2) Uniform Static Air Pressure Test, Loading per PA 202-94
   3) Water Resistance Test, per PA 202-94
   4) Forced Entry Test, per TAS 202-94
   5) Large Missile Impact Test per FBC, TAS 201-94
   6) Cyclic Wind Pressure Loading per FBC, TAS 203-94

Along with marked-up drawings and installation diagram of single hung windows, prepared by Fenestration Testing laboratory, Test Reports No(s). **FTL 4862** (FTL-05106) and **FTL 4863** (FTL-05111) both dated April 05, 2006, signed and sealed by Edmundo Lagaespada, P. E.

C. CALCULATIONS

1. Anchor Calculations and structural analysis dated 05-16-06 and last revised on 09-13-06, prepared, signed and sealed by Kelvyn A. Whitfield, P. E.
2. Glazing complies w/ASTME-1300-98 & 1300-02.

D. QUALITY ASSURANCE BY:

1. Miami-Dade Building Code Compliance Office. (BCCO).

E. MATERIAL CERTIFICATIONS

1. Notice of Acceptance No. 01-1204.01, issued to E. I. DuPont DeNemours, for their "Sentry Glass Plus", expiring on 01/14/2007.

F. STATEMENTS

1. Statement letter of conformance and "No financial interest", dated 05-16-2006, signed and sealed by Kelvyn A. Whitfield, P.E.
2. Statement of compliance, issued as part of above referenced test reports by Fenestration Testing Laboratory.

G. OTHER

1. None

Ishaq I. Chanda

Ishaq I. Chanda, P.E.
Product Control Examiner
NOA No 06-0530.11
Expiration Date: October 19, 2011
Approval Date: October 19, 2006

SERIES 5000 SINGLE HUNG WINDOW
LARGE MISSILE IMPACT

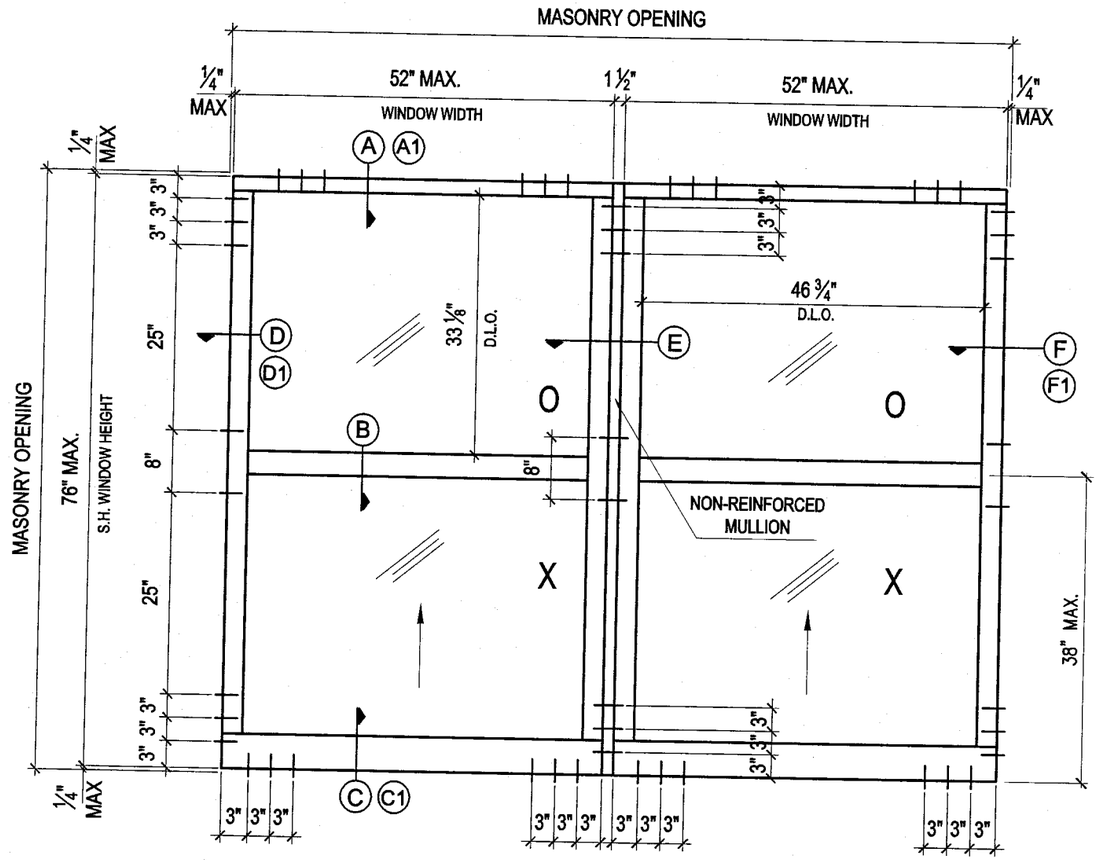

SINGLE-HUNG
WINDOW ELEVATION
EXTERIOR VIEW

Design Load Capacity (P. S. F.)	
Positive	Negative
110	110

NOTES:

1. THIS SINGLE HUNG WINDOW SYSTEM IS DESIGNED AND TESTED TO COMPLY WITH THE REQUIREMENTS OF THE 2004 (FBC) FLORIDA BUILDING CODE CHAPTER 16 AND 24, UNDER THE SPECIFIC CONDITION SHOWN ON THIS DRAWING. INCLUDING THE HIGH VELOCITY HURRICANE ZONE. REF. FTL No. 05106 (LAB. No. 4862) & FTL No. 05111 (LAB. No. 4863)
2. ALL EXTRUSIONS ARE ALUMINUM, 6105-T5 WITH A MINIMUM Fy OF 35.000 P.S.I. U.O.N.
3. LARGE MISSILE IMPACT: INSTALLATION UP TO 30 FT ABOVE GRADE WILL NOT REQUIRE A HURRICANE PROTECTION SYSTEM.
4. ALL ANCHORS ARE 5/16" TAP-CON 1 3/4" MIN. EMBEDMENT INTO FILLED CONCRETE BLOCK OR BETTER.
5. SHIMS. USE HARD PLASTIC.
6. A 33% INCREASE IN ALLOWABLE STRESS WAS NOT USED IN THE DESIGN OF ANCHORS
7. APPROVED STRUCTURAL SILICONE:
   A) 795 DOW CORNING
   B) SCS 2000 BY GE
   C) PROGLAZE SSG BY TREMCO
8. FRAME CORNERS, VENT CORNERS & VERTICAL MULLION TO BE SEALED WITH SILICONE

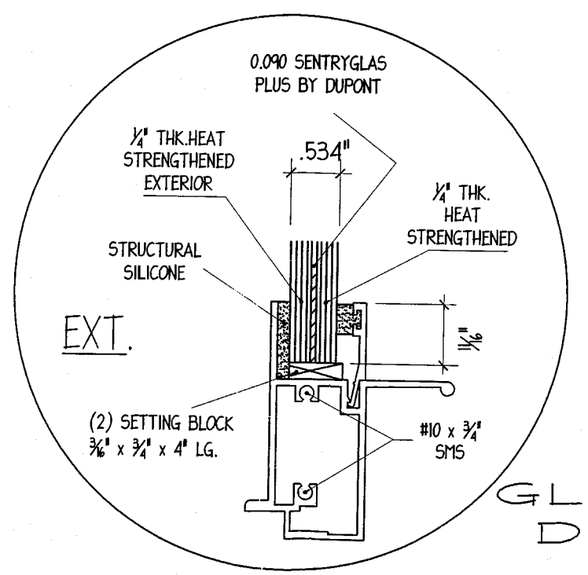

GLAZING DETAIL

Approved as complying with the Florida Building Code
Date OCT 19, 2006
NOA# 06-0530.11
Miami Dade Product Control Division
By Suraj L. Chanda

SEAL	ELEVATION
	KELVYN WHITFIELD.P.E 1002 NE 116 ST MIAMI, FL 33161 DATE 9/28/06 FLORIDA No-24140 STRUCTURAL/MECHANICAL

Continental Glass Systems Inc
325 West 74 Place
Hialeah Florida, 33014
Phone 305-231-1101 Fax 305-231-1103

Series 5000
SINGLE HUNG
LARGE MISSILE

Revision

No	Date	By	Description
1	9-13-06		

Date	8-16-06
Scale	N.T.S.
Design by	G. S.
Drawing by	RICHARD
Checked by	G. S.
Drawing No.	S.H.-5000-L.M.
Sheet 1 of 7	

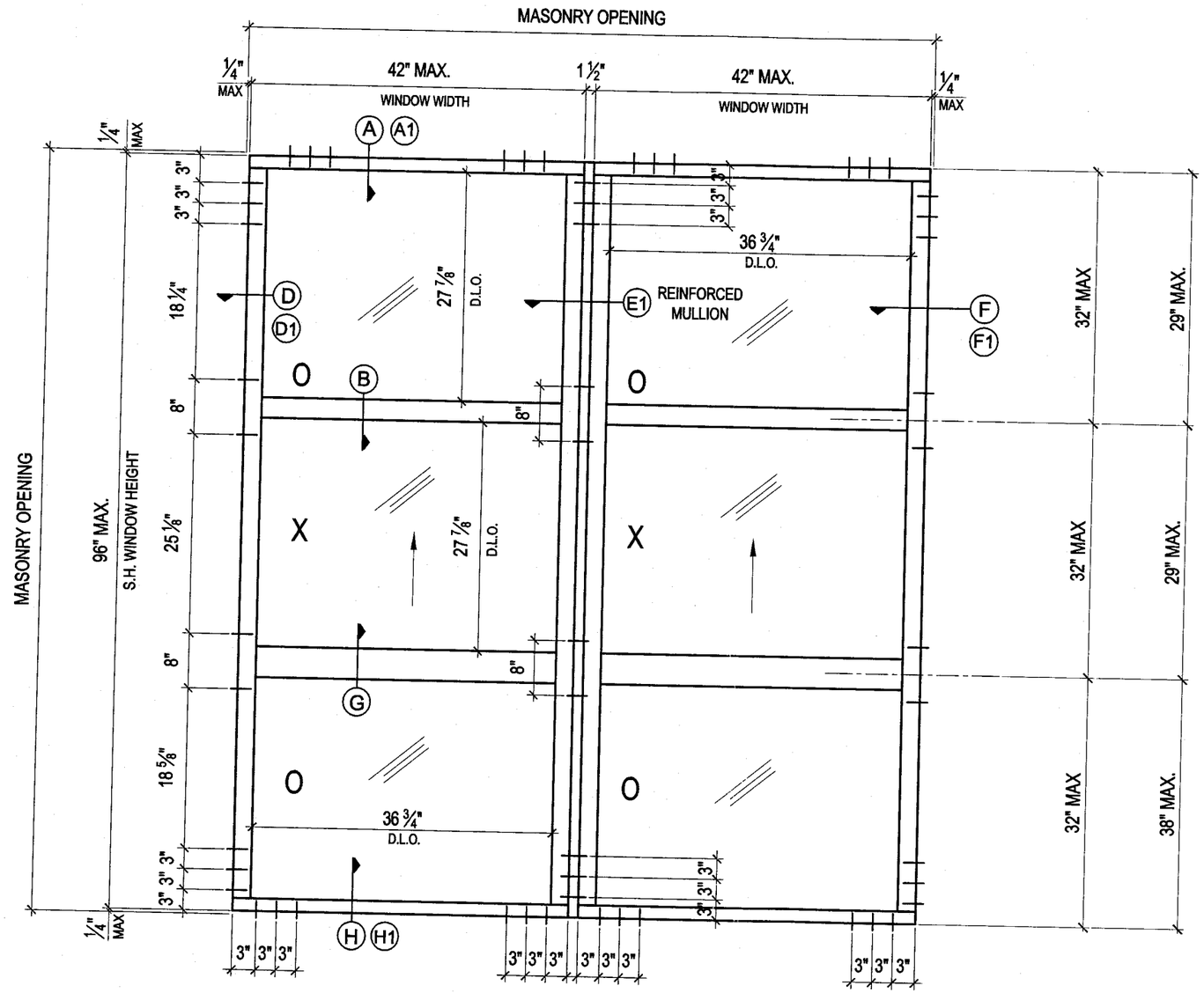

Design Load Capacity (P. S. F.)	
Positive	Negative
110	110

SINGLE-HUNG (W/REINF.MULLION)

WINDOW ELEVATION

EXTERIOR VIEW

Approved as complying with the Florida Buiding Code
Date OCT 19, 2006
NOA# 06-0530.11
Miami Dade Product Control Division
By Ishaq I. Chand

SEAL	ELEVATION
	KELVYN WHITFIELD.P.E 1002 NE 116 ST MIAMI, FL 33161 DATE 9/28/06 FLORIDA No-24140 STRUCTURAL/MECHANICAL

Continental Glass Systems Inc
325 West 74 Place
Hialeah Florida, 33014
Phone 305-231-1101 Fax 305-231-1103

Series 5000
SINGLE HUNG
LARGE MISSILE

Revision

No	Date	By	Description
1	9-13-06		

Date	8-16-06
Scale	N.T.S.
Design by	G. S.
Drawing by	RICHARD
Checked by	G. S.

Drawing No.
S.H.-5000-L.M.

Sheet 2 of 7

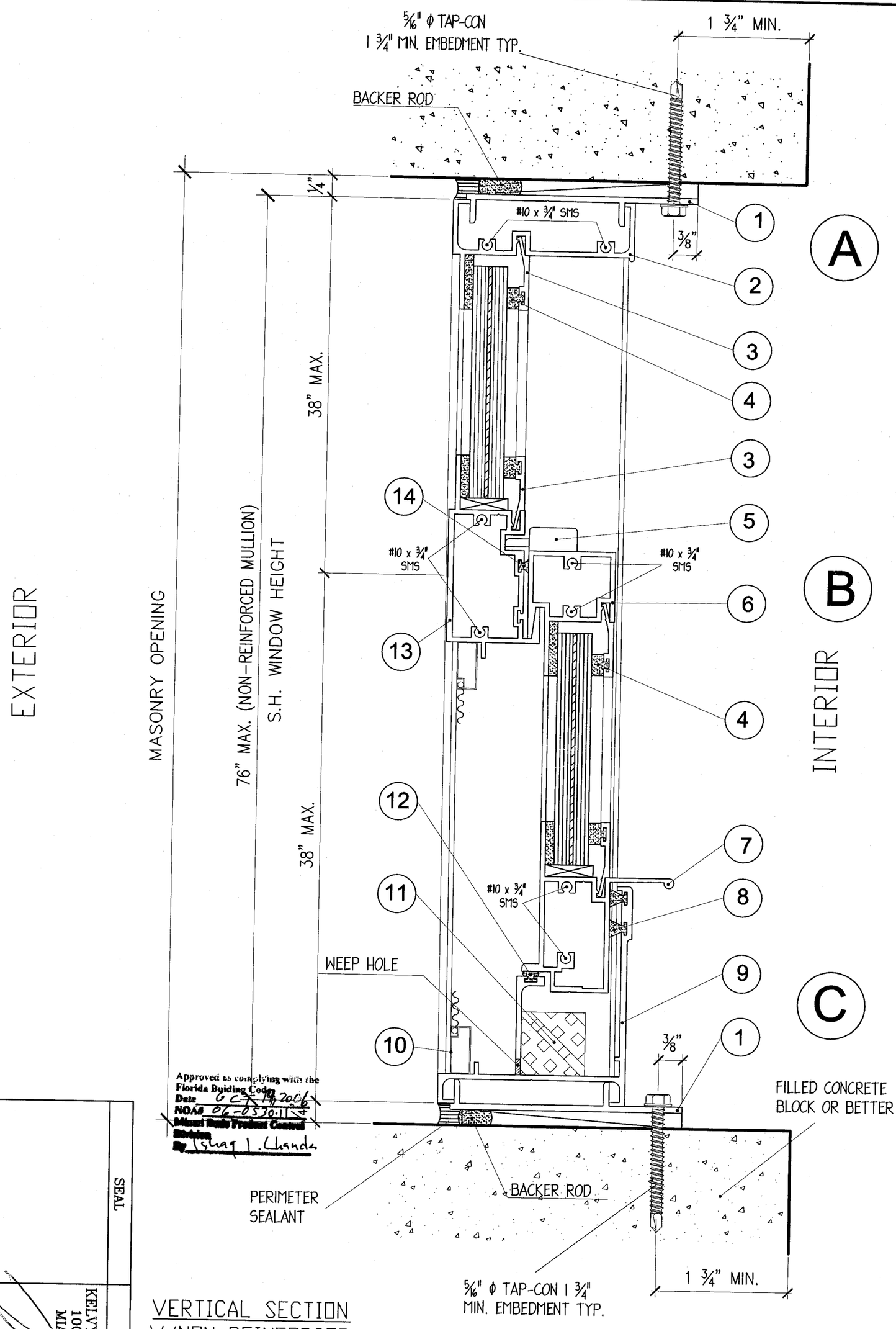

Approved as complying with the Florida Building Code
Date 6 Oct 19, 2006
NOA# 06-0530.11
Miami Dade Product Control Division
By Ishaq I. Chanda

VERTICAL SECTION W/NON-REINFORCED MULLION

SEAL

DETAILS

KELVYN WHITFIELD.P.E
1002 NE 116 ST
MIAMI, FL 33161

DATE 9/28/06
FLORIDA No-24140
STRUCTURAL/MECHANICAL

Sheet 3 of 7

Drawing No. S.H.-5000-L.M.

Checked by	G. S.
Drawing by	RICHARD
Design by	G. S.
Scale	N.T.S.
Date	9-16-06

Revision

No	Date	By	Description
1	9-13-06		

Series 5000
SINGLE HUNG
LARGE MISSILE

Continental Glass Systems Inc
325 West 74 Place
Hialeah Florida, 33014
Phone 305-231-1101 Fax 305-231-1103

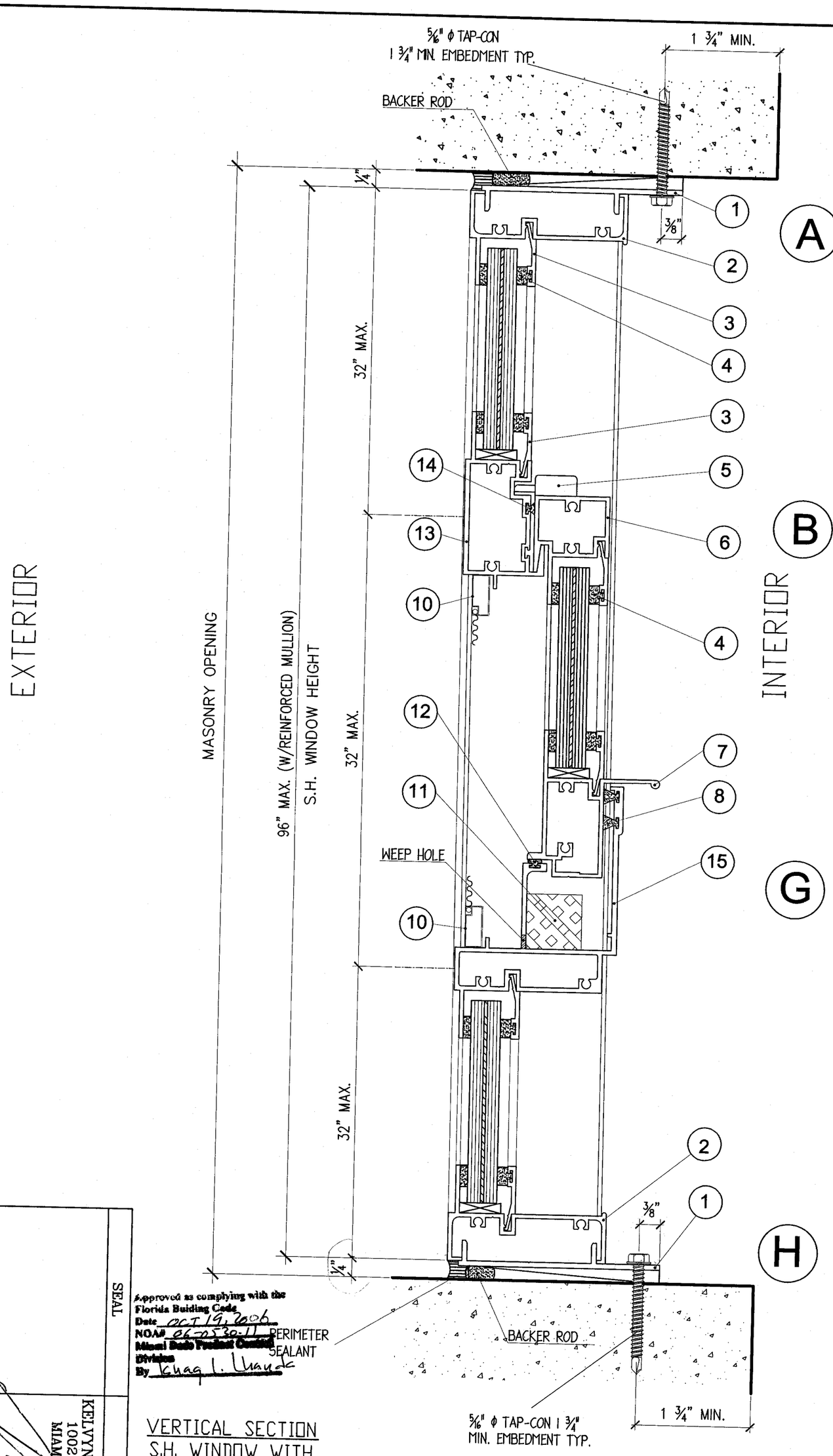

Approved as complying with the Florida Building Code
Date OCT 19, 2006
NOA# 06-0530.11
Miami Dade Product Control Division
By Ichag I. Lhanda

VERTICAL SECTION
S.H. WINDOW WITH
REINFORCED MULLION

Revision			
No	Date	By	Description
1	9-13-06		

Series 5000
SINGLE HUNG
LARGE MISSILE

Continental Glass Systems Inc
325 West 74 Place
Hialeah Florida, 33014
Phone 305-231-1101 Fax 305-231-1103

Date	8-16-06
Scale	N.T.S.
Design by	G. S.
Drawing by	RICHARD
Checked by	G. S.
Drawing No.	S.H.-5000-L.M.
Sheet 4 of 7	

SEAL

DETAILS

KELVYN WHITFIELD.P.E
1002 NE 116 ST
MIAMI FL 33161

DATE 9/26/06
FLORIDA No-24140
STRUCTURAL/MECHANICAL

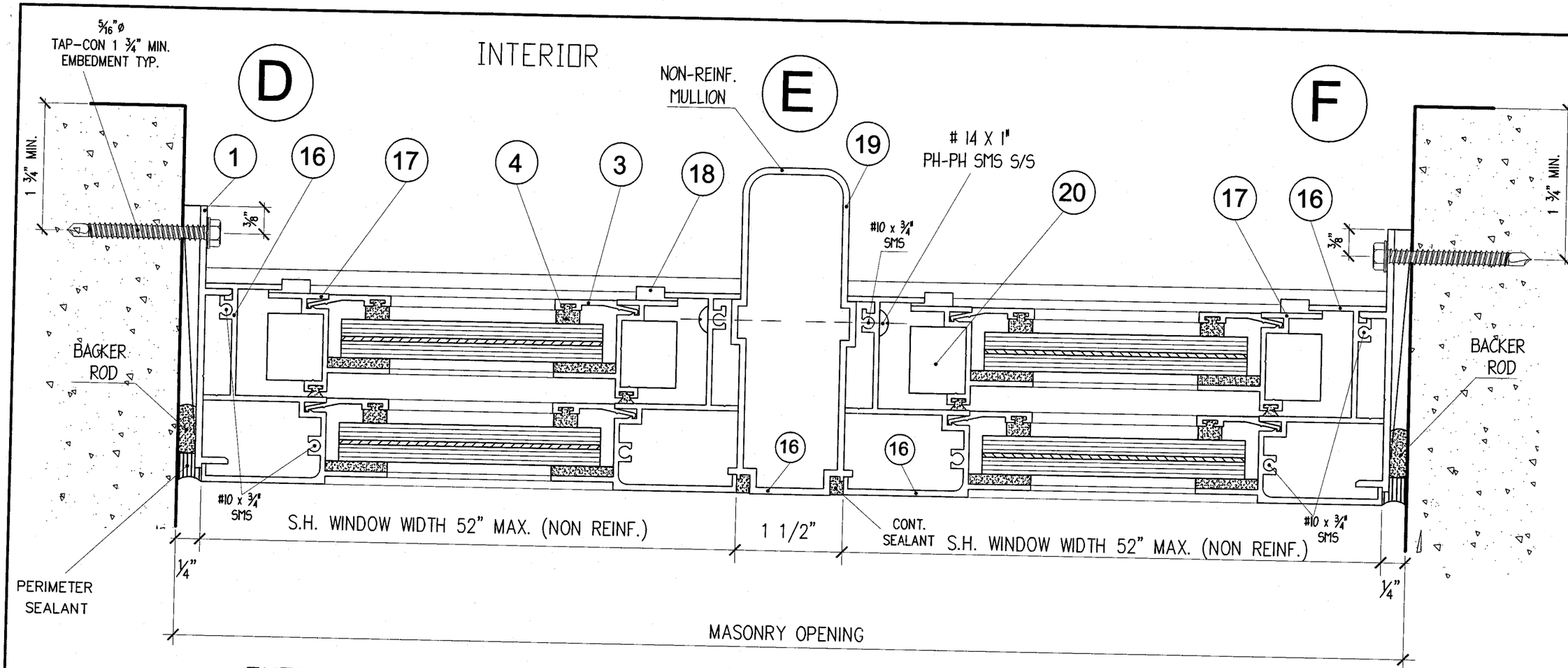

HORIZONTAL SECTION
W/NON REINF. MULLION

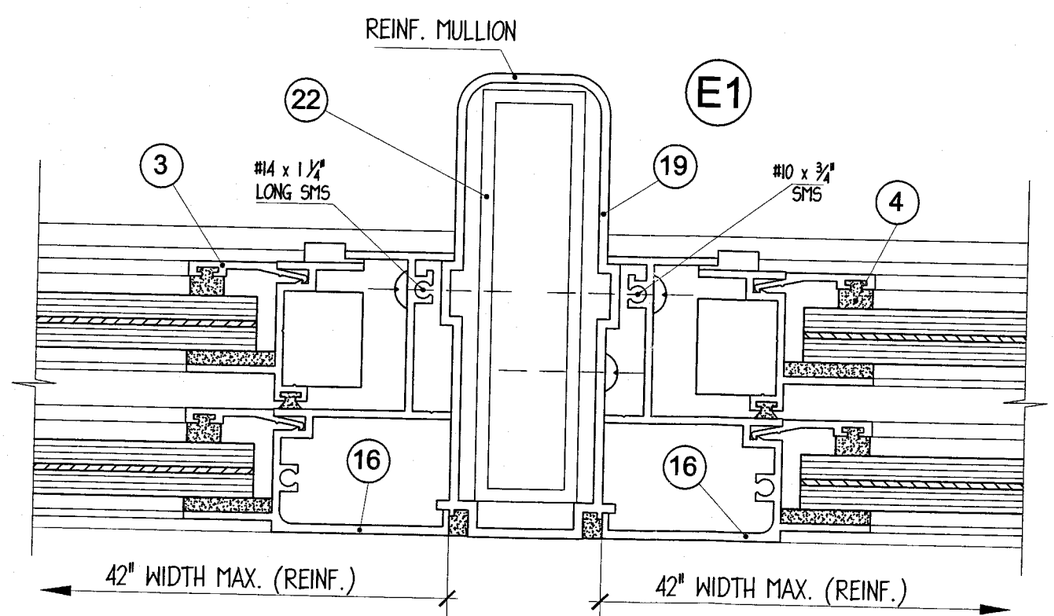

HORIZONTAL SECTION
W/REINF. MULLION

Approved as complying with the Florida Buiding Code
Date OCT 19 2006
NOA# 06-0530.11
Miami Dade Product Control Division
By Ishaq I. Chanda

Continental Glass Systems Inc
325 West 74 Place
Hialeah Florida, 33014
Phone 305-231-1101 Fax 305-231-1103

Series 5000
SINGLE HUNG
LARGE MISSILE

Revision			
No	Date	By	Description
1	9-13-06		

Date	8-16-06
Scale	N.T.S.
Design by	G. S.
Drawing by	RICHARD
Checked by	G. S.
Drawing No.	S.H.-5000-L.M.
Sheet 5	of 7

SEAL

DETAILS

KELVYN WHITFIELD.P.E
1002 NE 116 ST
MIAMI, FL 33161
DATE 9/28/06
FLORIDA No--24140
STRUCTURAL/MECHANICAL

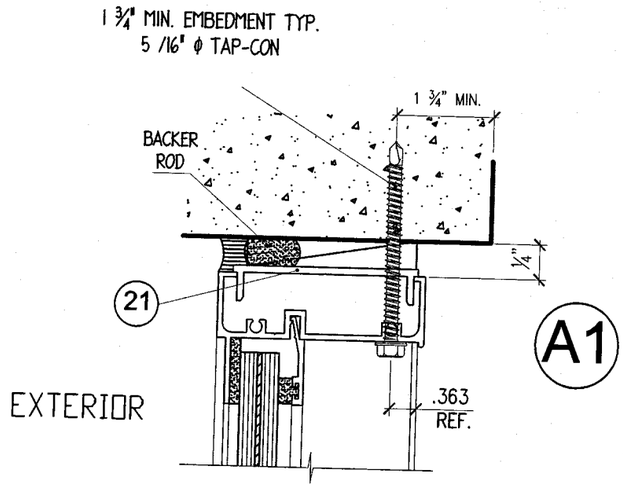

A1

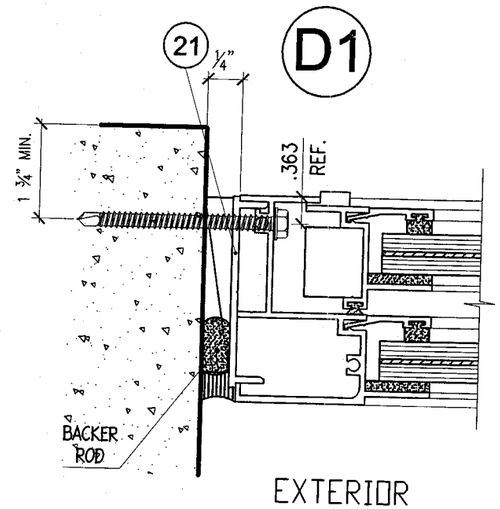

D1

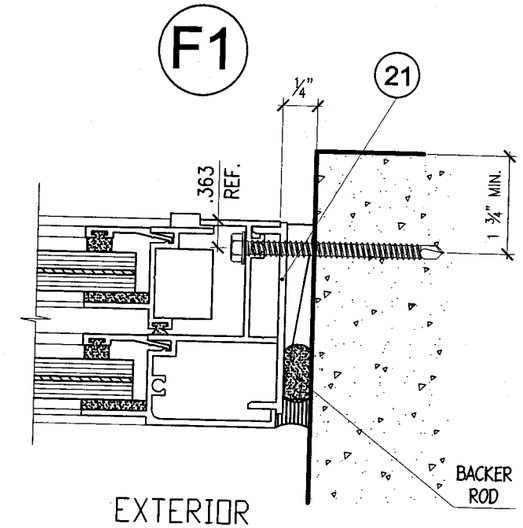

F1

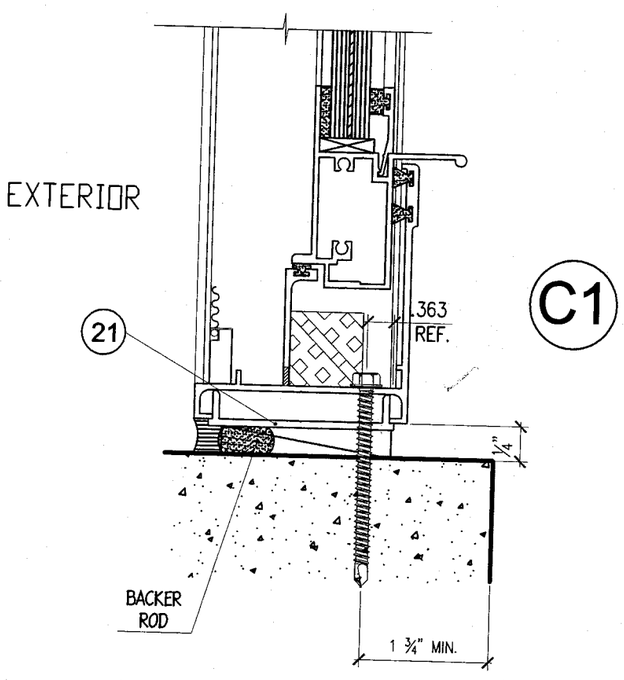

C1

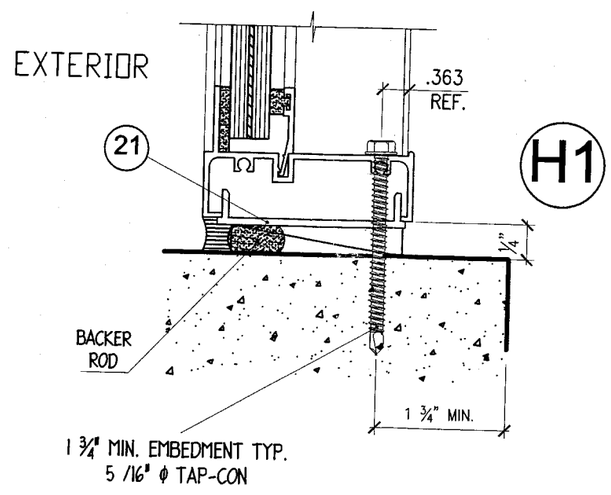

H1

Approved as complying with the Florida Buiding Code
Date OCT 19, 2006
NOA# 06-0536.11
Miami Dade Product Control Division
By Ishaq I. Lhanda

Continental Glass Systems Inc
325 West 74 Place
Hialeah Florida, 33014
Phone 305-231-1101 Fax 305-231-1103

Series 5000
SINGLE HUNG
LARGE MISSILE

Revision			
No	Date	By	Description
1	9-13-06		

Date	8-16-06
Scale	N.T.S.
Design by	G. S.
Drawing by	RICHARD
Checked by	G. S.
Drawing No.	S.H.-5000-L.M.
Sheet	6 of 7

SEAL

DETAILS

KELVYN WHITFIELD.P.E
1002 NE 116 ST
MIAMI, FL 33161
DATE 9/25/06
FLORIDA No-24140
STRUCTURA/MECHANICAL

ANCHOR

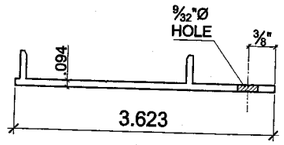

(1) 5000-09

HEAD OR SILL

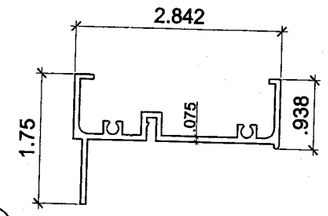

(2) 5000-01

GLAZING BEAD

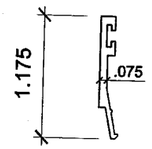

(3) 5000-08

TOP VENT

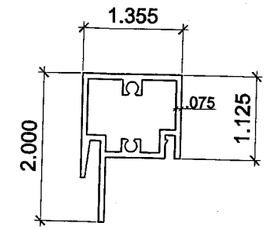

(6) 5000-05

MULLION

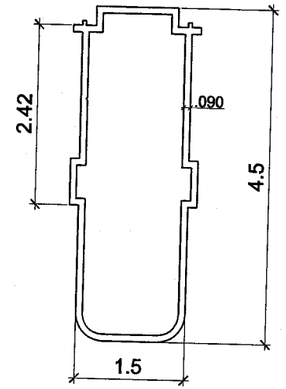

(19) 5000-10

INTERMEDIATE

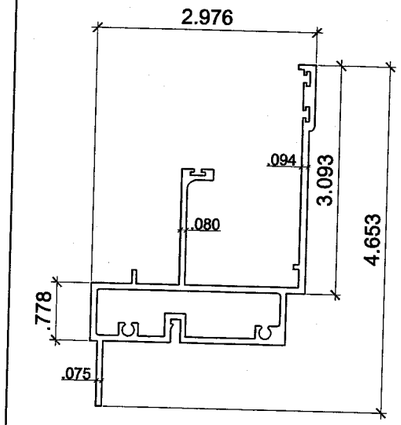

(15) 5000-11

SINGLE HUNG

ITEM #	PART #	PART NAME	REMARKS
1	5000-09	ANCHOR	
2	5000-01	HEAD OR SILL	FRAME
3	5000-08	GLAZING BEAD	
4	CGS-01	GLASS SPACING	PROTOTYPE PLASTIC EXTRUSION
5	SL-01	LOCK (2 CAM LOCKS)	DNS
6	5000-05	TOP VENT	VENT
7	5000-06	BOTTOM VENT	VENT
8		FIN-SEAL .400 x .187	ULTRAFAB
9	5000-02	SILL	FRAME
10		SCREEN	
11		BAFFLE 1 x 1 x 4	FRANK LOWE
12	E20610	VINYL BULB	PROTOTYPE PLASTIC EXTRUSION
13	5000-04	MEETING RAIL	FRAME
14		FIN-SEAL .250 x .187	ULTRAFAB
15	5000-11	INTERMEDIATE SILL	FRAME
16	5000-03	JAMB	FRAME
17	5000-07	SIDE RAIL	VENT
18		PLASTIC GUIDE	DNS
19	5000-10	MULLION	
20		BALANCE	CALDWELL
21	5000-09	ANCHOR	
22	ALUM. TUBE 1/8"x1"x4" FULL LENGTH ATTACHED WITH #14 PH-PH SMS s/s		

JAMB

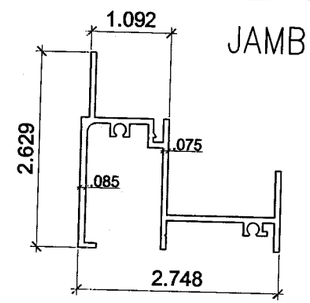

(16) 5000-03

BOTTOM VENT

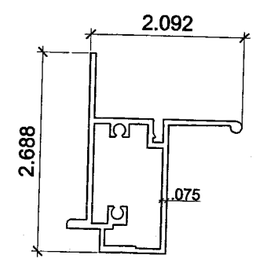

(7) 5000-06

MULLION REINFORCEMENT ALUM. TUBE

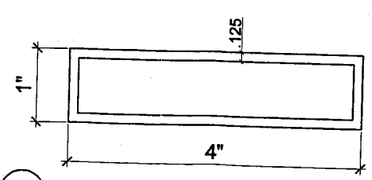

(22)

SIDE RAIL

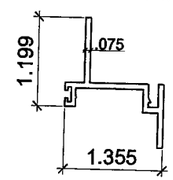

(17) 5000-07

MEETING RAIL

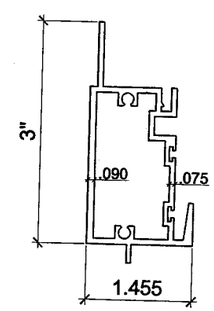

(13) 5000-04

SILL

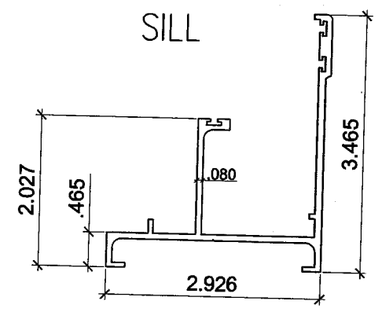

(9) 5000-02

ANCHOR

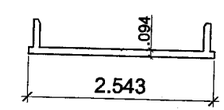

(21) 5000-09

Continental Glass Systems Inc
325 West 74 Place
Hialeah Florida, 33014
Phone 305-231-1101 Fax 305-231-1103

Series 5000
SINGLE HUNG
LARGE MISSILE

Revision

No.	Date	By	Description
1	9-13-06		

Date	8-16-06
Scale	N.T.S.
Design by	G. S.
Drawing by	RICHARD
Checked by	G. S.
Drawing No.	S.H.-5000-L.M.
Sheet	7 of 7

SEAL

Approved as complying with the Florida Buiding Code
Date OCT 19, 2006
NOA# 06-0530.11
Miami Dade Product Control Division
By Shag L. Chanda

EXTRUSIONS & PARTS

KELVYN WHITFIELD.P.E
1002 NE 116 ST
MIAMI, FL 33161

DATE 9/25/06
FLORIDA No-24140
STRUCTURAL/MECHANICAL