MIAMI-DADE

BUILDING CODE COMPLIANCE OFFICE (BCCO)
PRODUCT CONTROL DIVISION

MIAMI-DADE COUNTY, FLORIDA
METRO-DADE FLAGLER BUILDING
140 WEST FLAGLER STREET, SUITE 1603
MIAMI, FLORIDA 33130-1563
(305) 375-2901 FAX (305) 375-2908

NOTICE OF ACCEPTANCE (NOA)

Ruskin Manufacturing.
3900 Dr. Greaves Road.
Grandview, MO 64030

SCOPE: This NOA is being issued under the applicable rules and regulations governing the use of construction materials. The documentation submitted has been reviewed by Miami-Dade County Product Control Division and accepted by the Board of Rules and Appeals (BORA) to be used in Miami Dade County and other areas where allowed by the Authority Having Jurisdiction (AHJ).

This NOA shall not be valid after the expiration date stated below. The Miami Dade County Product Control Division (in Miami-Dade County) and/or the AHJ (in areas other than Miami Dade County) reserve the right to have this product or material tested for quality assurance purposes. If this product or material fails to perform in the accepted manner, the manufacturer will incur the expense of such testing and the AHJ may immediately revoke, modify, or suspend the use of such product or material within their jurisdiction. BORA reserves the right to revoke this acceptance, if it is determined by Miami-Dade county Product Control Division that this product or material fails to meet the requirements of the applicable building code.

This product is approved as described herein, and has been designed to comply with the Florida Building Code including the High Velocity Hurricane Zone.

DESCRIPTION: ELF6375DXD with Optional CD102 Damper

APPROVAL DOCUMENT: Drawing No.**60-021562-00D, 01D, 02D, 03D, 04D, 05D, 13D. 14D** & 15D, titled "ELF6375DXD LOUVER'S," dated 03/06/98 & 04/22/98 with last revision on 01/11/01, prepared by Ruskin Manufacturing. signed and sealed by E. P. Hutson, PE. bearing the Miami-Dade County Product Control Renewal stamp with the NOA number and expiration date by the Miami-Dade County Product Control Division.

MISSILE IMPACT RATING: Large & Small Missile.

LABELING: Each unit shall bear a permanent label with the manufacturer's name or logo, city, state and following statement: "Miami-Dade County Product Control Approved or MDCPCA", unless otherwise noted herein.

RENEWAL of this NOA shall be considered after a renewal application has been filed and there has been no change in the applicable building code negatively affecting the performance of this product.

TERMINATION of this NOA will occur after the expiration date or if there has been a revision or change in the materials, use, and/or manufacture of the product or process. Misuse of this NOA as an endorsement of any product, for sales, advertising or any other purposes shall automatically terminate this NOA. Failure to comply with any section of this NOA shall be cause for termination and removal of NOA.

ADVERTISEMENT: The NOA number preceded by the words Miami-Dade County, Florida, and followed by the expiration date may be displayed in advertising literature. If any portion of the NOA is displayed, then it shall be done in its entirety.

INSPECTION: A copy of this entire NOA shall be provided to the user by the manufacturer or its distributors and shall be available for inspection at the job site at the request of the Building Official.

This NOA renews NOA 01-0328.04 and consists of this page, evidence page as well as approval document mentioned above.

The submitted documentation was reviewed by **Candido F. Font PE.**

PRODUCT CONTROL ACCEPTED

J. Gascon
7/24/06

Ruskin Manufacturing.

NOTICE OF ACCEPTANCE: EVIDENCE PAGE

A. DRAWINGS

1. Drawing No.**60-021562-00D, 01D, 02D, 03D, 04D, 05D, 13D, 14D & 15D**, titled "ELF6375DXD Louver's" dated 03/06/98 & 04/22/98 with last revision on 01/11/01, prepared by Ruskin Manufacturing and signed and sealed by E. P. Hutson, P.E.

B. TESTS

1. Test report on Large Missile Impact Test per PA 201, Cyclic wind Pressure Test per PA 203 and Uniform Static Air Pressure Test per PA 202 of "Open, Extruded Aluminum Louver Assembly," prepared by Construction Research Laboratory Inc., Report No.97-1124.22, dated 08/04/00 and revised on 12/18/00 , signed and sealed by N. S. Balsara, PE.

C. CALCULATION

1. Louver Blade, Mullion & Support Calculations of Dade County Louver per DWG. No. 60021680-21D, dated 07/18/00, pages 1 to 21 of 21, prepared by R. H. Wagner, signed and sealed by E. P. Hutson, PE.

D. STATEMENTS.

1. Letter of Code Compliance issued by Ruskin Manufacturing, on 07/29/97, signed by M. Astourian, PE.
2. Test Compliance letter issued by Construction Research Laboratory, Inc., on 08/04/00, signed by R. Sembello.
3. No Financial Interest letter issued by Ruskin Manufacturing, signed by V. M. Astourian and notarized by T. S. Turner on 06/23/99
4. No change letter issued by Ruskin Manufacturing on 05/05/06, signed by R. Van Becelaere.
5. No change letter issued by Ruskin Manufacturing on 05/19/06, signed by R. Van Becelaere.

E. MATERIAL CERTIFICATION

1. Extrusion drawings No. 70-020689-00B, 70-020690-00B, 70-020691-00B & 70-020560-00B, prepared by Ruskin Manufacturing, on 05/17/96, 04/05/96, 05/20/96 & 10/25/94 approved by GL and RVB.

08/03/06

Cándido F. Font PE.
Sr. Product Control Examiner
NOA No 06-0602.04
Expiration Date: July 09, 2011
Approval: Date: August 03, 2006

LOUVER SCHEDULE

MODEL	DAMPER REQUIRED BEHIND LOUVER	LOUVER SIZE "A"	LOUVER SIZE "B"	O.D. OF SLEEVE SIZE WIDTH ("A")	HEIGHT ("B")	DEPTH	ROUGH OPENING DIM. "C"	"D"	SHIP SECTIONS	ASSY	DETAILS HEAD	JAMB	SILL	H.V.B.S. TYPE	C-C	QTY	DEPTH	COLOR	LEGEND
ELF6375DXD	NO DAMPER	47 1/4"	71 1/4"	–	–	–	48 1/4"	72 1/4"	1	A	11/03D	13 SIM	13/03D	059	23 5/8"	1	6"	MILL	
ELF6375DXD	DAMPER REQUIRED	96 1/4"	117 3/4"	96 1/2"	118"	32 1/2"	97 1/4"	118 3/4"	2	E	12/03D	12 SIM	14/03D	C4 X 5.4#	24 1/16"	3	4"	MILL	③
ELF6375DXD	DAMPER REQUIRED	156"	96"	156 1/4"	96 1/4"	34 1/2"	157"	97"	2	C	7/02D	8/02D	9/02D	(2)059	26"	4	6"	MILL	③⑥
ELF6375DXD	NO DAMPER	95 1/2"	119"	–	–	–	96 1/2"	120"	2	B	11/03D	13 SIM	13/03D	C5 X 6.7#	23 7/8"	3	5"	MILL	
ELF6375DXD	NO DAMPER	32 5/8"	61 7/8"	–	–	–	33 5/8"	62 7/8"	1	D	17/04D	15/04D	16/04D	087	16 5/16"	1	4"	MILL	⑤
ELF6375DXD Ⓐ	NO DAMPER	251 3/4"	119 3/4"	252"	120"		252 1/4"	120 1/4"	3	F				C5 X 6.7#	20 15/16"	9	5"	MILL	

FRAME	
6063-T5 extruded aluminum with .080" nominal wall thickness.	X
Flange frame is same material and thickness as above.	
BLADES	
6063-T5 extruded aluminum with .080" nominal wall thickness. Blades are positioned at 37.5° angle.	X
SCREEN	
3/4" x .051" expanded flattened aluminum bird screen.	X
1/2" mesh x .063" aluminum bird screen.	
18-16 mesh alum insect screen	
No screen.	
FINISH	
Mill.	X
Kynar (opt).	
Baked enamel (modified fluoropolymer, 50% Kynar, opt).	
Color Anodize (opt).	
Clear Anodize (opt).	
Color:	
ACCESSORIES	
Extended sill.	
Clip angles.	
Blankoff panel.REF SCHED	X

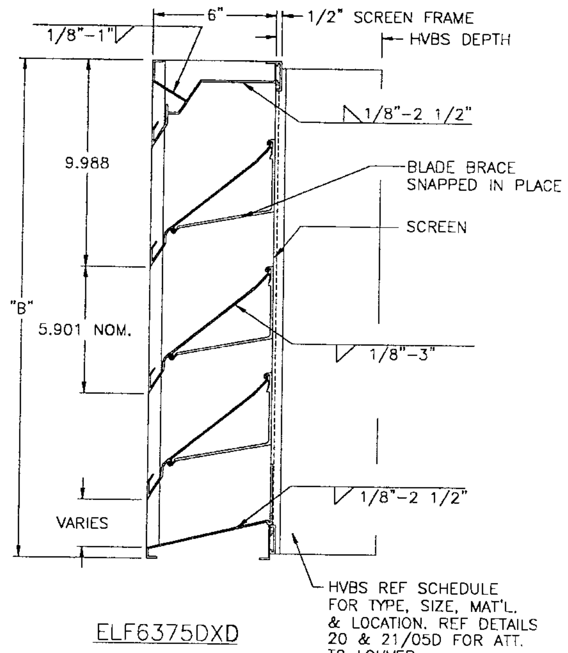

ELF6375DXD

FRAME	
6063-T5 extruded aluminum with .125" nominal wall thickness. W/4" x 1" angle rear @ perimiter only.	X
Flange frame is same material and thickness as above.	X
BLADES	
6063-T5 extruded aluminum with .080" nominal wall thickness. Blades are positioned at 37.5° angle.	X
SCREEN	
3/4" x .051" expanded flattened aluminum bird screen.	
1/2" mesh x .063" aluminum bird screen. Note 1.	X
18-16 mesh alum insect screen	
No screen.	
FINISH	
Mill.	X
Kynar (opt).	
Baked enamel (modified fluoropolymer, 50% Kynar, opt).	
Color Anodize (opt).	
Clear Anodize (opt).	
Color: SEE NOTE #15	
ACCESSORIES	
Extended sill. REF DETAIL'S	
Clip angles.	
Blankoff panel.	
1 1/2" X 1 1/2" X 1/8" Continuous angles at perimeter	X

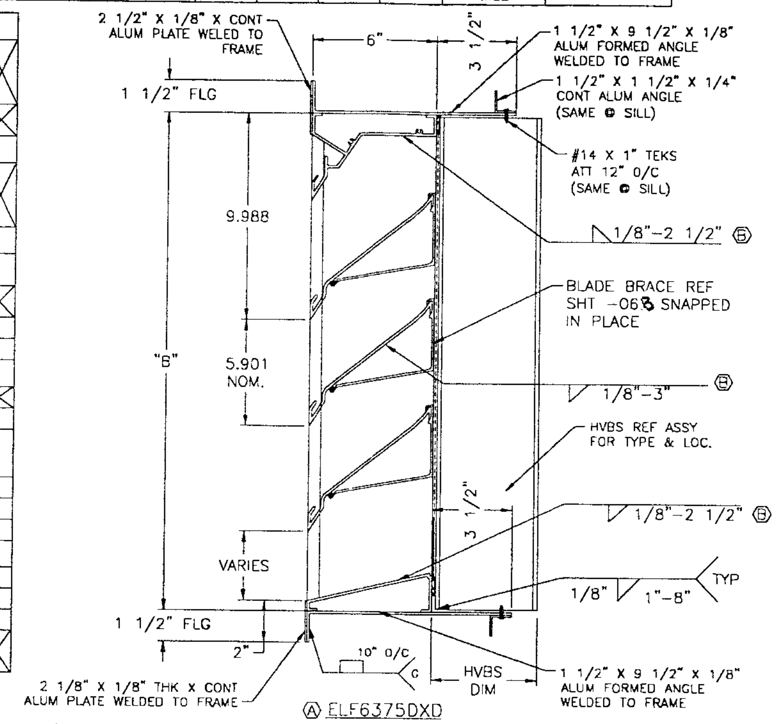

Ⓐ ELF6375DXD

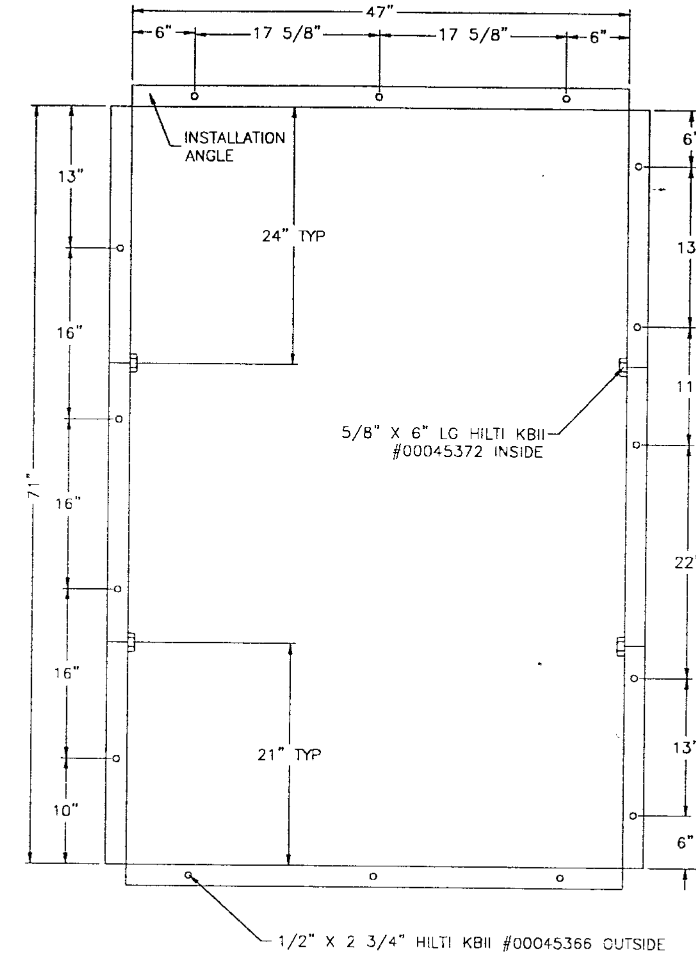

ANCHOR BOLT PATTERN FOR ASSY "A"

N.T.S. REAR VIEW

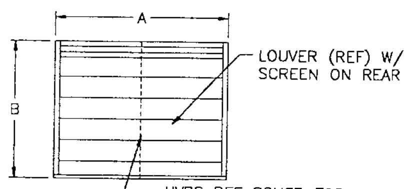

ASSEMBLY "A"

NTS FRONT VIEW

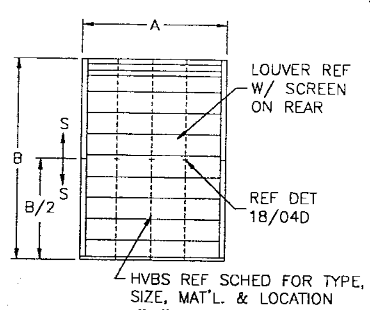

ASSEMBLY "E"

NTS FRONT VIEW

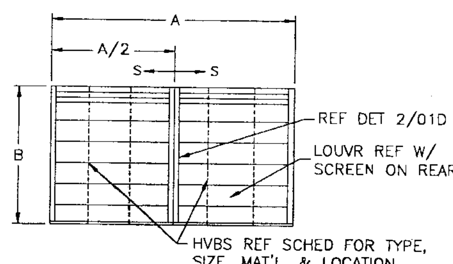

ASSEMBLY "C"

NTS FRONT VIEW

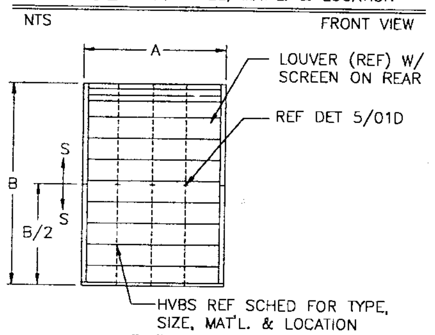

ASSEMBLY "B"

NTS FRONT VIEW

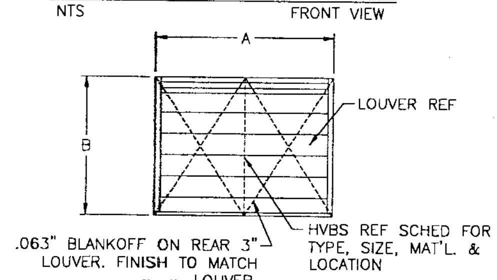

ASSEMBLY "D"

NTS FRONT VIEW

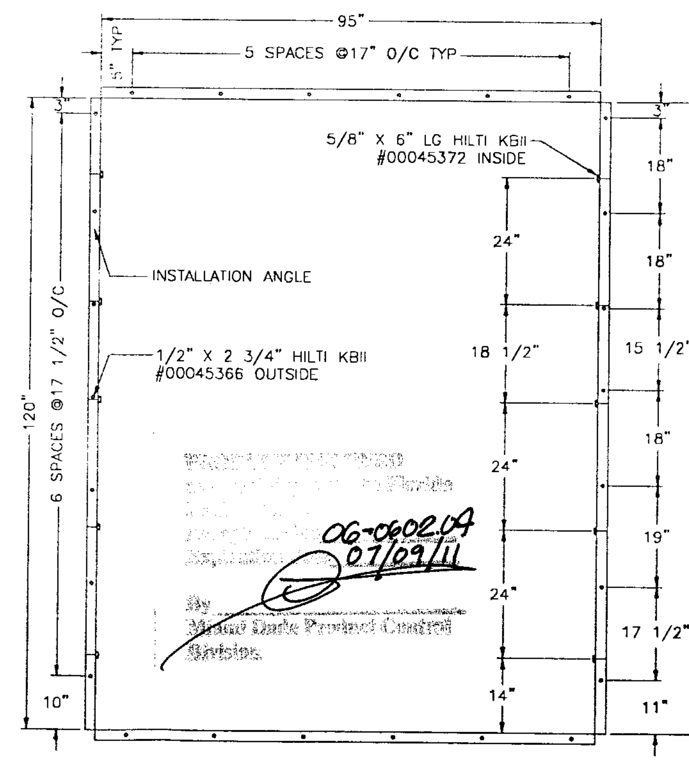

ANCHOR BOLT PATTERN FOR ASSY "B"

N.T.S. REAR VIEW

Ⓑ DESIGN PRESSURE RATING
±138 PSF FOR MODEL ELF6375DXD
±148 PSF FOR Ⓐ MODEL ELE6375DXD
LARGE MISSILE IMPACT RESISTANCE

Edward P Hutson Jr
01/03/01

PRODUCT RENEWED 01-0328.04 07/09/2005

PRODUCT RENEWED 06-0602.04 07/09/11 By Miami Dade Product Control Division

APPROVED AS COMPLYING WITH THE SOUTH FLORIDA BUILDING CODE
DATE February 08, 2001
BY
PRODUCT CONTROL DIVISION
BUILDING CODE COMPLIANCE OFFICE
ACCEPTANCE NO. 00-0830.03

FOR OFFICE USE ONLY

NOTES:

1) DIMENSIONS SHOWN ARE ACTUAL LOUVER SIZE.
2) LOUVER DESIGN INCORPORATES STRUCTURAL SUPPORTS, ATTACHED TO REAR OF LOUVER TO WITHSTAND VARIOUS WINDLOADS (REF SCHED FOR WINDLOAD PSF) REF SCHEDULE, ASSY, OR PLAN VIEW FOR SIZE, QTY., & LOCATION.
3) ⬭ INDICATES TAG: LETTER= ASSY #= SHIP SECTION.
4) H.V.B.S. = HIDDEN VERTICAL BLADE SUPPORT.
C-C = CENTER TO CENTER DIM OF HVBS. FOUND ON SCHED
QTY = QUANTITY OF HVBS. FOUND ON SCHEDULE
H.H.B.S. = HORZ HIDDEN BLADE SUPPORT
L.D. = LOUVER DIMENSION.
L.D.D. = LOUVER DOOR DIMENSION.
N.I.R.C. = NOT IN RUSKIN CONTRACT.
O.L.D. = OUT SIDE LOUVER DIMENSION.
U.N.O. = UNLESS NOTED OTHERWISE
OPP = OPPOSITE.
O.S.D. = OUTSIDE SLEEVE DIMENSION
P.S.F. = POUNDS PER SQUARE FOOT
R.O. = ROUGH OPENING.
SIM = SIMILAR
S.D. = SUB-FRAME DIMENSION.
S.S. = SHIP SECTION.
S.S.D. = SHIP SECTION DIMENSION
TYP = TYPICAL
5) NOTCHING OF HVBS AROUND STRUCTURE AND/OR OBSTRUCTIONS IN THE FIELD, SHALL BE THE RESPONSIBILITY OF INSTALLATION CONTRACTOR. IF CONTINUOUS ANGLES AND/OR EXTENDED SILLS ARE ORDERED NOTCHING OF THE ANGLES AND SILLS AROUND OBSTRUCTIONS (HVBS & FIELD CONDITIONS) SHALL BE THE RESPONSIBILITY OF THE INSTALLATION CONTRACTOR.
6) MULTIPLE SECTION LOUVER/SCREEN ASSEMBLIES REQUIRE FIELD DRILLING OF SUPPORTS, FRAMES AND OPTIONAL CLIP ANGLES BY THE INSTALLATION CONTRACTOR. (N.I.R.C.)
7) SEALING REQUIREMENTS AROUND LOUVERS, BETWEEN ADJOINING SILLS, FRAMES AND WATERSTOPS FOR ARCHITECTURAL STYLE CONTINUOUS BLADE LOUVERS SHALL BE THE RESPONSIBILITY OF THE INSTALLATION CONTRACTOR.
8) IF BITUMINOUS COMPOUNDS ARE REQUIRED, BETWEEN DISSIMILAR METALS OR LOUVER AND OTHER SURFACES. IT IS THE RESPONSIBILITY OF THE INSTALLATION CONTRACTOR TO SUPPLY AND PROPERLY APPLY IT.
9) WHEN CLIP ANGLES ARE ORDERED AS AN OPTION THEY ARE 1 1/2" X 1 1/2" X 1/8" X 2" U.N.O REF. DETAILS AND ARE INSTALLED 24" ON CENTER, 6" FROM CORNERS AND @ SHIP SECTION JOINTS. THE SIZE AND ANCHOR TYPE USED TO FASTEN TO THE STRUCTURE SHALL BE THE RESPONSIBILITY OF THE ENGINEER OF RECORD ON THE PROJECT. (NIRC)
10) REF DWGS: SEE #60-021562-01D THRU 05D FOR DETAILS.
11) SLEEVE JOINT TO HAVE CONTINUOUS WELD & GRIND SMOOTH SO THAT THE WELD DOES NOT REDUCE OPENING
12) ALL EXPOSED EDGES AND SURFACES, WHEN VIEWED FROM FRONT, ARE TO BE PAINTED TO MATCH LOUVER.

LEGEND

① NOT USED
② NOT USED
③ CD-102 DAMPERS ARE TO BE INSTALLED BEHIND ELF6375DXD LOUVERS IN A 1/8" THICK ALUMINUM SLEEVE. (REF. SCHEDULE FOR SLEEVE DEPTH) DAMPER'S ARE TO BE SHIPPED LOOSE DUE TO SIZE & WEIGHT LIMITATION'S AND INSTALLED IN THE FIELD. REF DRAWING #60-21562-15D FOR CD-102 ASSEMBLIES AND ADDITIONAL INFORMATION.
④ NOT USED
⑤ REAR OF LOUVER TO BE 100% .063" ALUMINUM BLANKED OFF. FINISH TO MATCH LOUVER.
⑥ HVBS MEMBER (2-059'S) REQUIRED BEHIND VISIBLE MULLION REF DET 2/01D

NOTE: IF LOUVER ASSEMBLY IS BEING SPLIT & IT REQUIRES A SLEEVE, THE SLEEVE WILL ALSO BE SPLIT AND BE CAULKED TOGETHER IN FIELD.

ENGINEER OF RECORD: EDWARD PAUL HUTSON JR.						
ENGINEERING DISCIPLINE: STRUCTURAL ENGINEER	Ⓐ	ADDED ASSY 'F' & SPEC	JW	VMA		10/18/00
REGISTRATION #: STATE OF FLORIDA #0052339	CHANGE LETTER	REVISION DESCRIPTION	DWN. BY:	CHK'D. BY:	APPV'D. BY:	DATE
DWN. BY: JTK; CHK. BY:; APPV'D. BY:; APPV'D. BY:; DATE: 3-6-98	RUSKIN Mfg 3900 DR. Greaves RD Grandview, MO 64030 PROPRIETARY INFORMATION		PLOT SCALE: NONE	DWG. CERTIFIED BY: DATE:		
DADE COUNTY LOUVERS	TITLE: ELF6375DXD LOUVER'S SCHED, SPEC'S, ASSY'S & NOTES		DWG. NO. 60-021562-00D			

H:\60\021500\60-021562-00D.dwg Tue Dec 19 07:58:17 2000

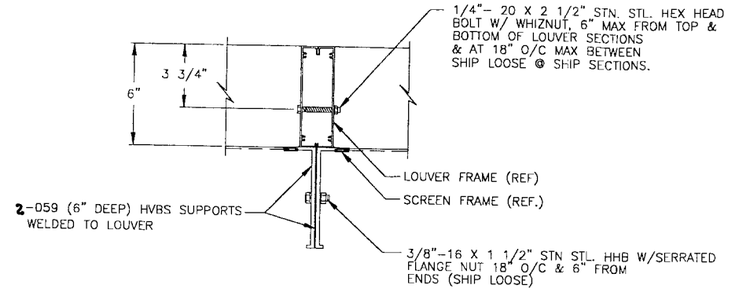

1/– NOT USED
N.T.S.

© 2/00D VISIBLE MULLION CONNECTION DETAIL
SCALE: N.T.S.

3/00D NOT USED
SCALE: N.T.S.

4/00D NOT USED
SCALE: N.T.S.

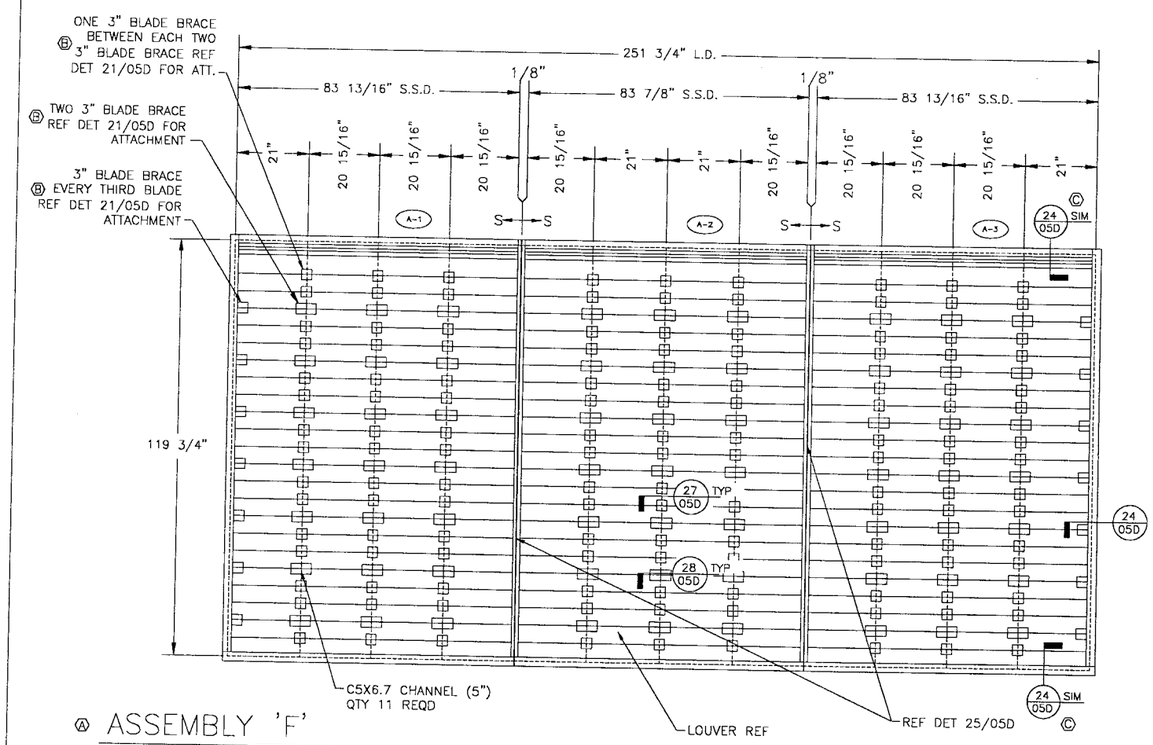

Ⓐ ASSEMBLY 'F'
NTS
DESIGN PRESSURE RATING 160PSF
FRONT VIEW

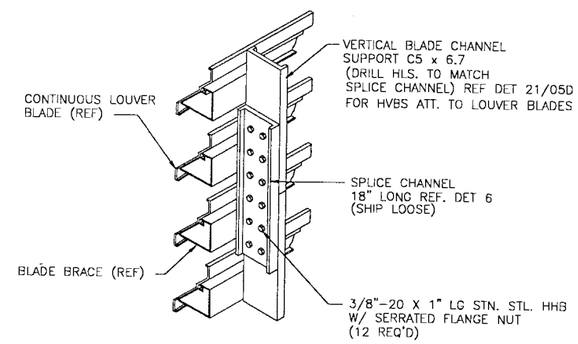

5/00D C5" X 6.7# HVBS SPLICE DETAIL
SCALE: N.T.S.

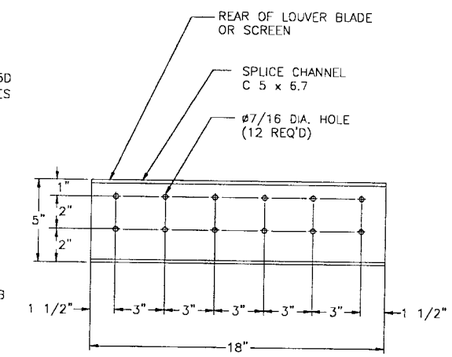

6/00D C5" X 6.7# SPLICE PLATE DETAIL
SCALE: N.T.S.
MATERIAL: C5" X 6.7# STRUCTURAL CHANNEL

Edward P Hutson Jr
1/11/2001

PRODUCT RENEWED
06-0602.04
07/09/11
Miami-Dade Product Control Division

PRODUCT RENEWED
01-0328.04
07/09/2006
PRODUCT CONTROL DIVISION
BUILDING CODE COMPLIANCE OFFICE

APPROVED AS COMPLYING WITH THE SOUTH FLORIDA BUILDING CODE
DATE February 08, 2001
BY
PRODUCT CONTROL DIVISION
BUILDING CODE COMPLIANCE OFFICE
ACCEPTANCE NO. 00-0830.03
FOR OFFICE USE ONLY

Ⓐ NOTES:

1) WELD BIRD SCREEN TO SCREEN FRAME @ 12" C–C.
2) THE STRUCTURE SUBSTRATE THAT HOLDS THE LOUVER IN PLACE, IS ASSUMED TO BE STRUCTURALLY SOUND AND STABLE TO TAKE THE LOADS DISPERSED BY THE LOUVER.
3) LOUVER IS NONBEARING AND IS NOT DESIGNED TO WITHSTAND BUILDING DEADLOADS.

NOTES:
1) REFERENCE DRAWING #60–021562–00D FOR SCHEDULE, SPECIFICATION'S, ASSEMBLIES, DETAIL'S & ADDITIONAL NOTES

	Ⓒ	REVD DET 2/00D, ADDED SECTION DETAIL 24/05D	JW	VMA		1/11/00
	Ⓑ	DET 1/– NOTE USED REVD NOTES ON ASSY 'F'	JW			
	Ⓐ	ADDED ASSY 'F'	JW	VMA		10-15-00
	CHANGE LETTER	REVISION DESCRIPTION	DWN. BY:	CHK'D. BY:	APPV'D. BY:	APPV'D. BY:	DATE

ENGINEER OF RECORD: EDWARD PAUL HUTSON JR.
ENGINEERING DISCIPLINE: STRUCTURAL ENGINEER
REGISTRATION #: STATE OF FLORIDA #0052339
DWN. BY: JTK DATE: 3-6-98 CHK. BY: DATE: APPV'D. BY: DATE: APPV'D. BY: DATE:
RUSKIN Mfg 3900 Dr. Greaves Rd. Grandview, MO 64030
PROPRIETARY INFORMATION
PLOT SCALE: NONE
DWG. CERTIFIED BY: DATE:
TITLE: DADE COUNTY LOUVERS"
ELF6375DXD LOUVER(S) DETAILS AND NOTES
DWG. NO. 60-021562-01D

H:\60\021500\60-021562-01D.dwg Thu Jan 11 09:34:24 2001

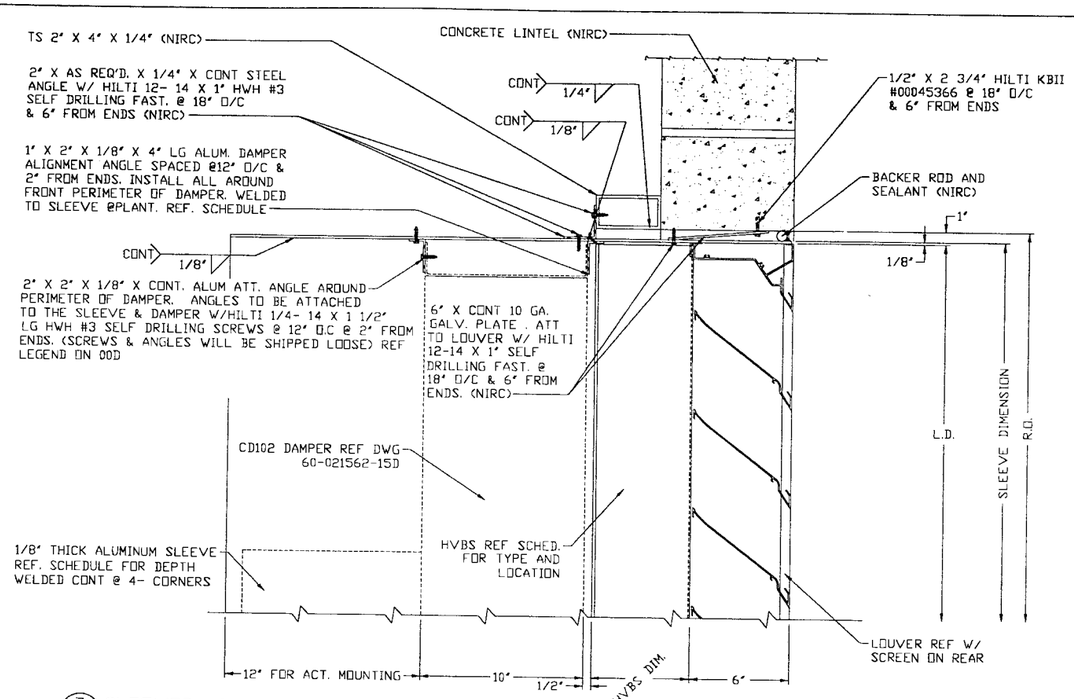

7 / 00D SLEEVED LOUVER DETAIL @HEAD (JAMB SIM)
SCALE: 3" = 1'-0"

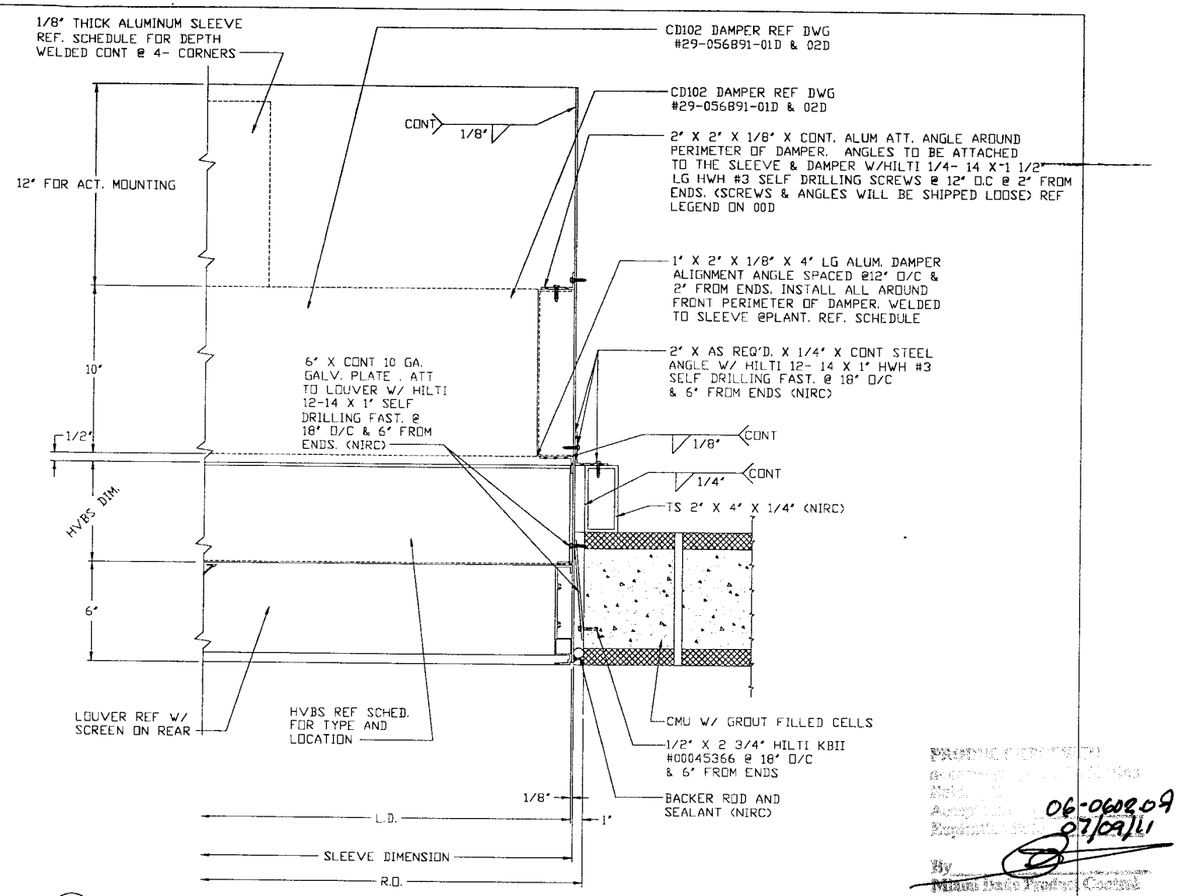

8 / 00D SLEEVED LOUVER DETAIL @ JAMB
SCALE: 3" = 1'-0"

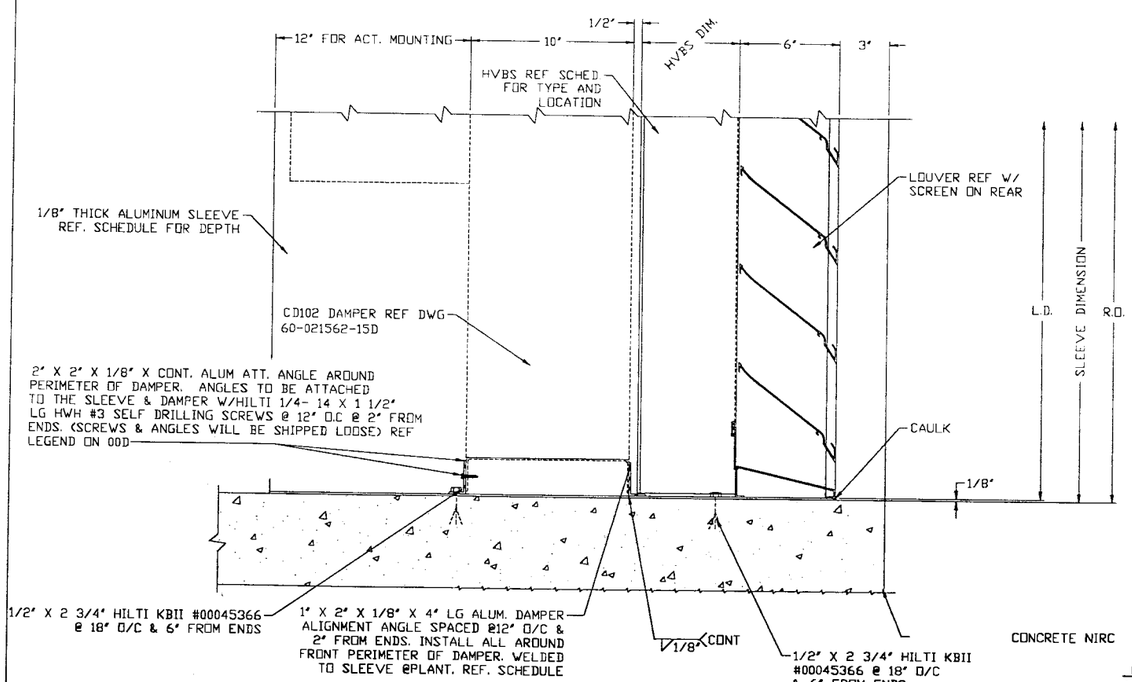

9 / 00D SLEEVED LOUVER DETAIL @SILL
SCALE: 3" = 1'-0"

ALL CONCRETE & MASONRY ANCHORS W/ GROUT FILLED CELLS ARE 1/2 HILTI KBII WITH 2 1/4" MIN EMBEDMENT, 3 1/2 MIN EDGE DISTANCE AND 5" MIN SPACING.

10 NOT USED
SCALE: N.T.S.

PRODUCT RECEIVED
ACCEPT. NUMBER 01-0328.04
DATE 07/09/2006
BY
ATTACHMENTS DIVISION
BUILDING CODE COMPLIANCE OFFICE

APPROVED AS COMPLYING WITH THE SOUTH FLORIDA BUILDING CODE
DATE February 08, 2001
BY
PRODUCT CONTROL DIVISION
BUILDING CODE COMPLIANCE OFFICE
ACCEPTANCE NO. 00-0830.03

FOR OFFICE USE ONLY

FOR FASTENER LOADS REF. DWG. 60-021562-13D

06-0608.09
07/09/11
By
Miami-Dade Product Control Division

Edward P Hutson Jr
01/03/01

NOTE:
ALL STRUCTURAL TUBING SHALL BE CONTINUOUS WELDED W/ 1/4" FILLET WELD ALL AROUND WHERE THEY MEET.

NOTES:
1) REFERENCE DRAWING #60-021562-00D FOR SPECIFICATIONS, SCHEDULE, ASSEMBLIES AND ADDITIONAL NOTES

ENGINEER OF RECORD: EDWARD PAUL HUTSON JR.				CHANGE LETTER	REVISION DESCRIPTION	DWN. BY:	CHK'D. BY:	APP'V'D. BY: APP'V'D. BY: DATE
ENGINEERING DISCIPLINE: STRUCTURAL ENGINEER								
REGISTRATION #: STATE OF FLORIDA #0052339				RUSKIN Mfg 3900 Dr. Greves Rd. Grandview, MO 64030		PLOT SCALE: NONE	DWG. CERTIFIED BY: DATE:	
DWN. BY: JTK	CHK. BY:	APP'V'D. BY:	APP'V'D. BY:	PROPRIETARY INFORMATION				
DATE: 3-6-98	DATE:	DATE:	DATE:					
DADE COUNTY LOUVERS				TITLE: ELF6375DXD LOUVER'S DETAIL'S AND NOTES		DWG. NO. 60-021562-02D		

H:\60\021500\60-021562-02D.dwg Fri Dec 15 15:02:12 2000

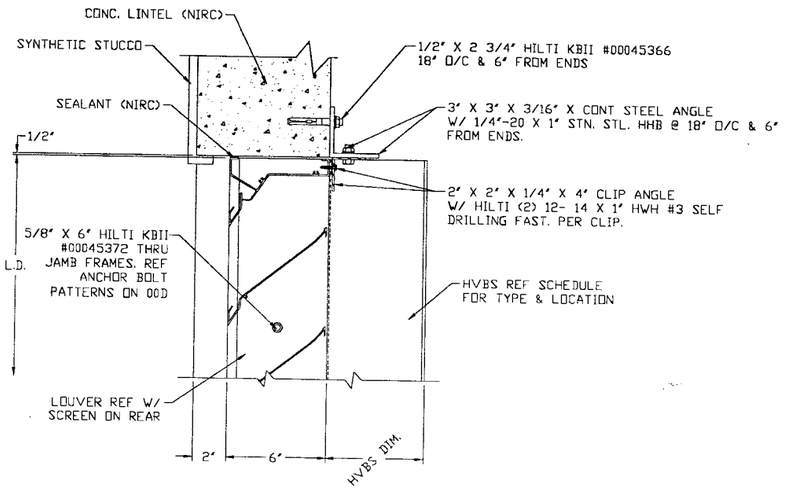

11 OOD LOUVER DETAIL @HEAD
SCALE: 3" = 1'-0" REFERENCE DRAWING #60-021562-00D FOR ANCHOR BOLT SPACING

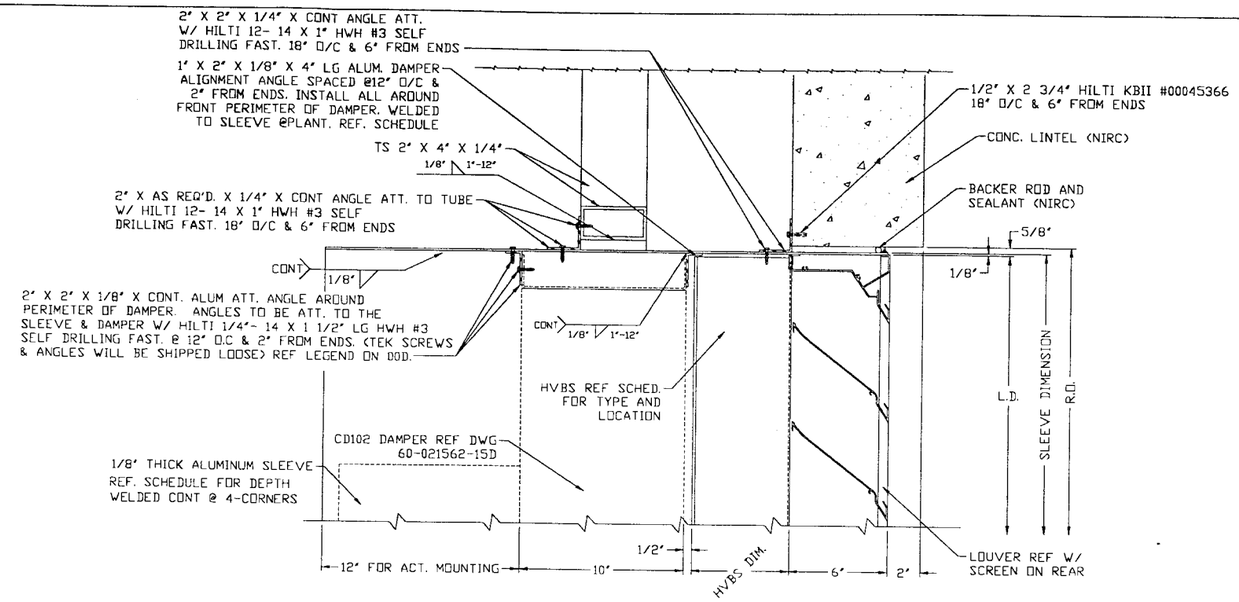

12 OOD SLEEVED LOUVER DETAIL @HEAD (JAMB SIM)
SCALE: 3" = 1'-0"

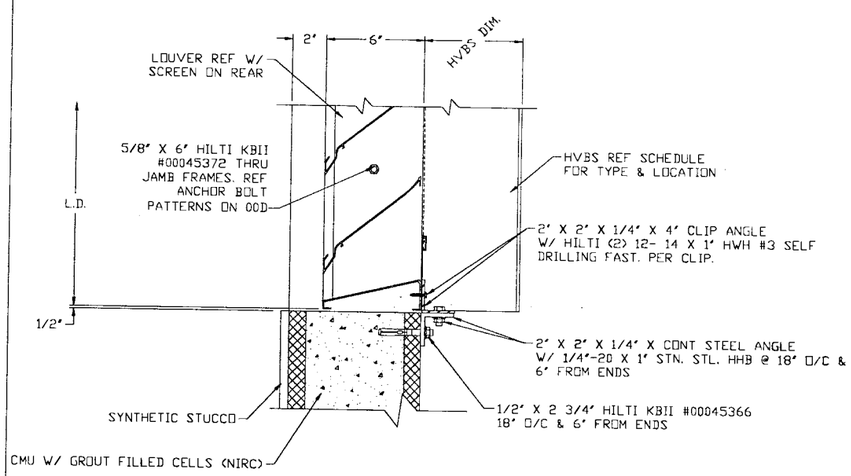

13 OOD LOUVER DETAIL @SILL (JAMB SIM)
SCALE: 3" = 1'-0" REFERENCE DRAWING #60-021562-00D FOR ANCHOR BOLT SPACING

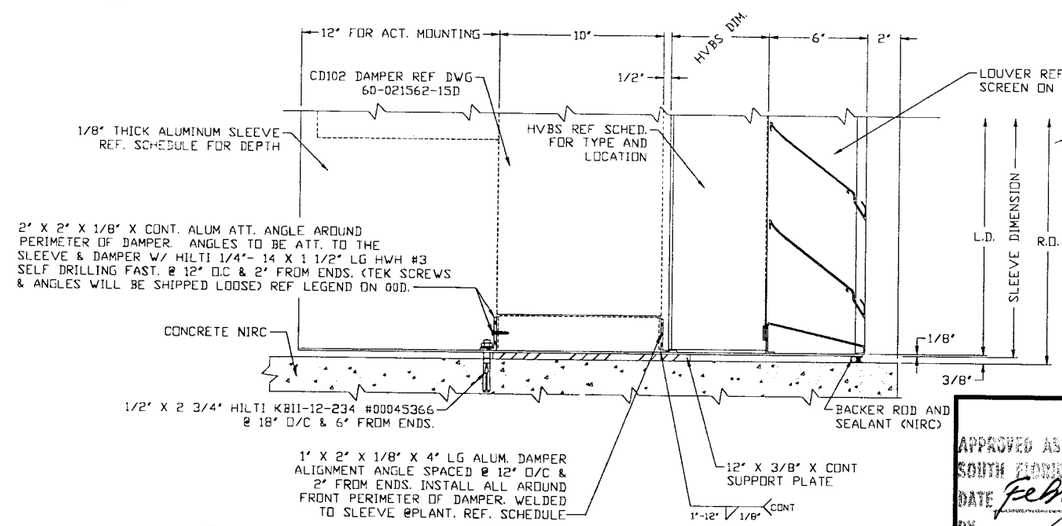

14 OOD SLEEVED LOUVER DETAIL @SILL
SCALE: 3" = 1'-0"

FOR FASTENER LOADS REF. DWG. 60-021562-13D & 14D

NOTES:
1) REFERENCE DRAWING #60-021562-00D FOR SPECIFICATIONS, SCHEDULE, ASSEMBLIES AND ADDITIONAL NOTES

PRODUCT CONTROL
APPROVED
06-0602.04
07/09/11
MIAMI-DADE COUNTY
DIVISION

Edward P Hutson Jr
01/03/01

APPROVED AS COMPLYING WITH THE SOUTH FLORIDA BUILDING CODE
DATE February 08, 2001
BY
PRODUCT CONTROL OFFICER
BUILDING CODE COMPLIANCE OFFICE
ACCEPTANCE NO. 00-0830.03
FOR OFFICE USE ONLY

PRODUCT CONTROL
APPROVED
01-0328.04
07/09/2006
MIAMI-DADE COUNTY
PRODUCT CONTROL DIVISION
BUILDING CODE COMPLIANCE OFFICE

ENGINEER OF RECORD: EDWARD PAUL HUTSON JR.							
ENGINEERING DISCIPLINE: STRUCTURAL ENGINEER							
REGISTRATION #: STATE OF FLORIDA #0052339	CHANGE LETTER	REVISION DESCRIPTION	DWN. BY:	CHK'D. BY:	APPV'D. BY:	APPV'D. BY:	DATE
DWN. BY: JTK DATE: 3-6-98 / CHK. BY: DATE: / APPV'D. BY: DATE: / APPV'D. BY: DATE:	RUSKIN Mfg 3900 Dr. Greaves Rd. Grandview, MO 64030 PROPRIETARY INFORMATION		PLOT SCALE: NONE		DWG. CERTIFIED BY: DATE:		
DADE COUNTY LOUVERS	TITLE: ELF6375DXD LOUVER'S DETAIL'S AND NOTES		DWG. NO. 60-021562-03D				

H:\60\021500\60-021562-03D.dwg Fri Dec 15 15:02:29 2000

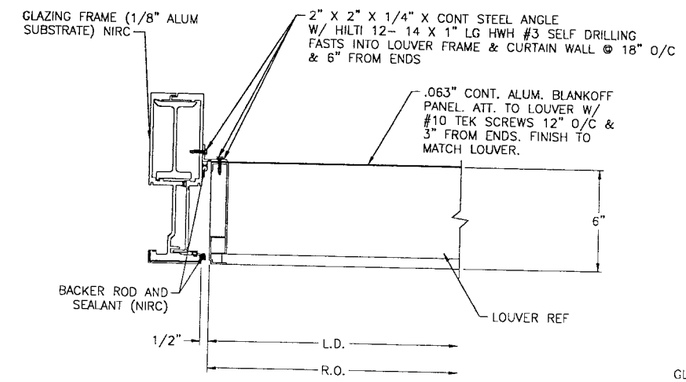

15 / 00D LOUVER DETAIL @JAMB
SCALE: 3" = 1'-0"

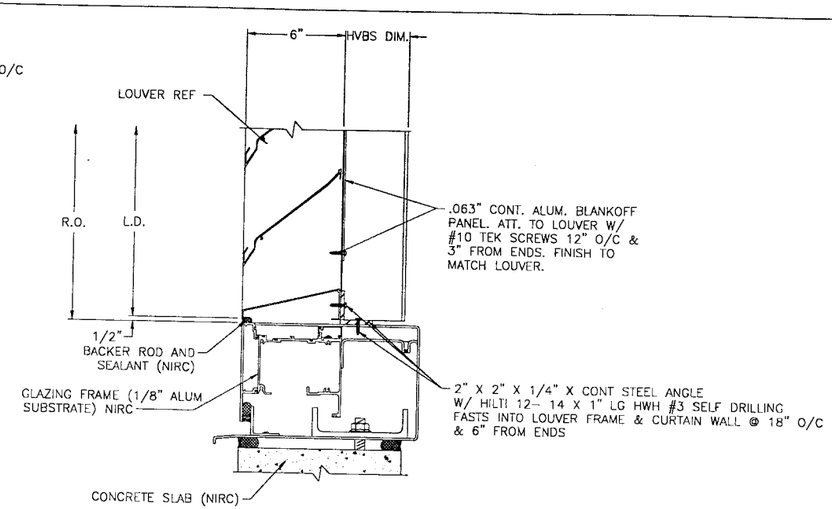

16 / 00D LOUVER DETAIL @SILL
SCALE: 3" = 1'-0"

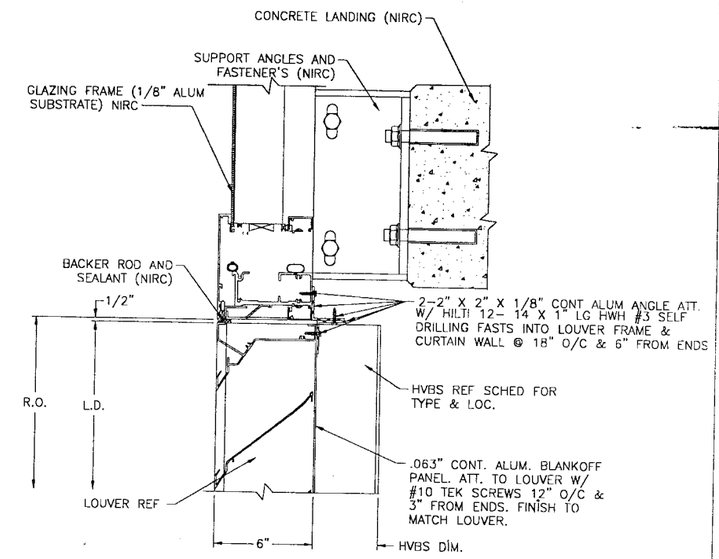

17 / 00D LOUVER DETAIL @HEAD
SCALE: 3" = 1'-0"

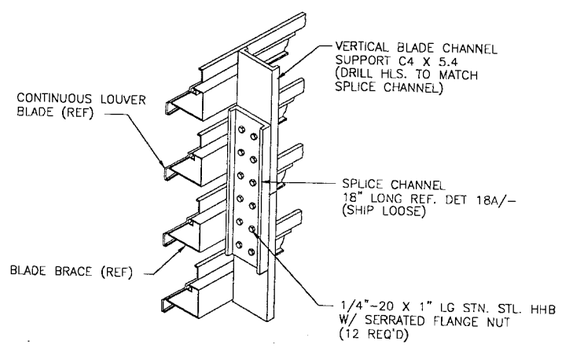

18 / 00D C4" X 5.4# HVBS SPLICE DETAIL
SCALE: N.T.S.

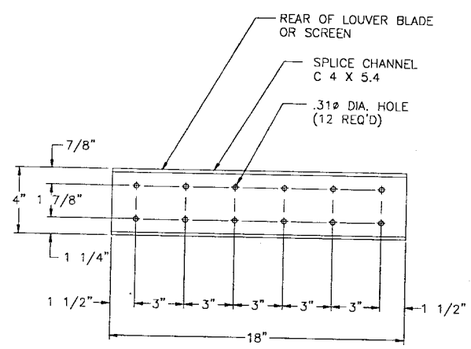

18A / — SPLICE CHANNEL DETAIL
SCALE: N.T.S.

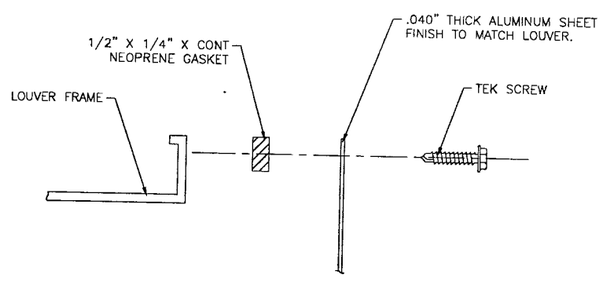

Ⓑ 19 / — .040 BLANK-OFF
N.T.S.

FOR FASTENER LOADS REF. DWG. 60-021562-14D

PRODUCT APPROVED
06-0602.04
07/09/11
Edward P Hutson Jr
01/03/01

PRODUCT APPROVED
01-0328.04
07/09/2006

APPROVED AS COMPLYING WITH THE SOUTH FLORIDA BUILDING CODE
DATE February 08, 2001
BY
PRODUCT CONTROL SECTION
BUILDING CODE COMPLIANCE OFFICE
ACCEPTANCE NO. 00-0830.03
FOR OFFICE USE ONLY

NOTES:
1) REFERENCE DRAWING #60-021562-000 FOR SPECIFICATIONS, SCHEDULE, ASSEMBLIES AND ADDITIONAL NOTES

ENGINEER OF RECORD: EDWARD PAUL HUTSON JR.								
ENGINEERING DISCIPLINE: STRUCTURAL ENGINEER				Ⓑ	REVD DET 19/-	JW		
REGISTRATION #: STATE OF FLORIDA #0052339				CHANGE LETTER	REVISION DESCRIPTION	DWN. BY:	CHK'D. BY:	APPV'D. BY:	APPV'D. BY:	DATE
DWN. BY: JTK	CHK. BY:	APPV'D. BY:	APPV'D. BY:	RUSKIN Mfg 3900 DR. Graves RD. Grandview, MO 64030		PLOT SCALE	DWG. CERTIFIED BY:	
DATE: 3-6-98	DATE:	DATE:	DATE:	PROPRIETARY INFORMATION		NONE	DATE:	
DADE COUNTY LOUVERS				TITLE ELF6375DXD LOUVER'S DETAIL'S AND NOTES		DWG. NO. 60-021562-04D		

H:\60\021500\60-021562-04D.dwg Wed Dec 20 14:16:32 2000

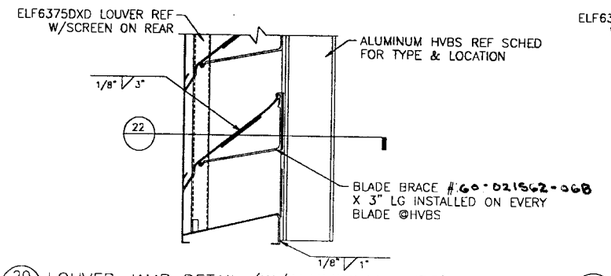

20 / 00D LOUVER JAMB DETAIL (W/ALUMINUM HVBS)
N.T.S. (SCREEN FRAME & SCREEN REMOVED FOR CLARITY)

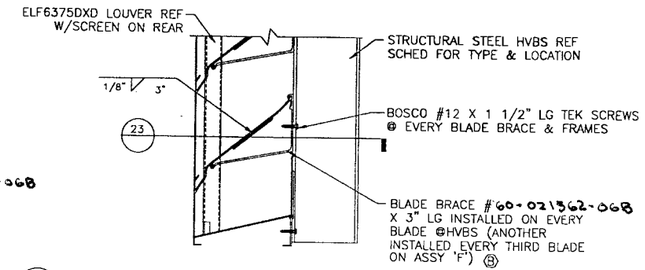

21 / 00D LOUVER JAMB DETAIL (W/STRUCTURAL STEEL HVBS)
N.T.S. (SCREEN FRAME & SCREEN REMOVED FOR CLARITY)

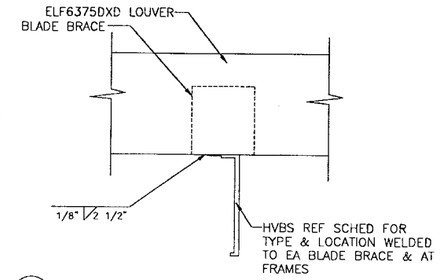

22 / — SECTION ATT DETAIL THRU ALUMINUM HVBS.
N.T.S. (SCREEN FRAME & SCREEN REMOVED FOR CLARITY)

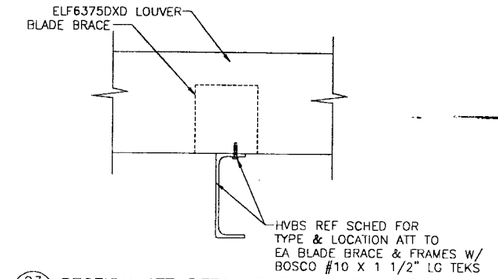

23 / — SECTION ATT DETAIL THRU STEEL HVBS.
N.T.S. (SCREEN FRAME & SCREEN REMOVED FOR CLARITY)

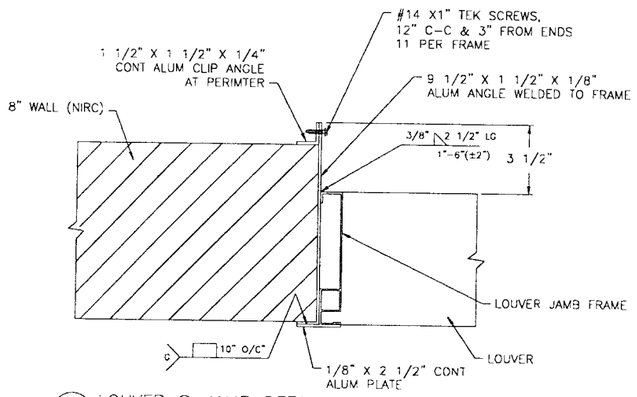

Ⓐ 24 / 01D LOUVER @ JAMB DETAIL
N.T.S.

NOTE:
1) DIMENSION "X" = 2 3/4" FOR 4" DOUBLE DRAINABLE LOUVERS, 3 3/4" FOR 6" DOUBLE DRAINABLE LOUVER'S & 1/2 OF LOUVER FRAME DEPTH FOR ALL OTHER LOUVER'S.

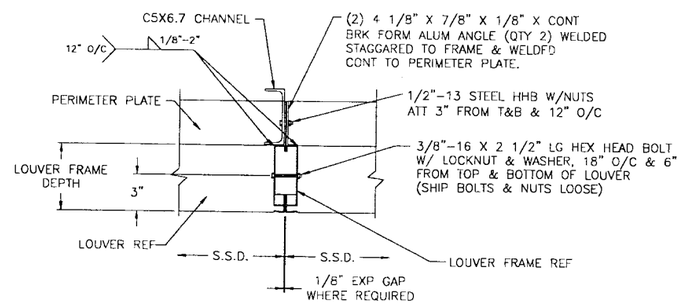

Ⓐ 25 / 01D VISIBLE MULLION CONNECTION DETAIL
N.T.S.

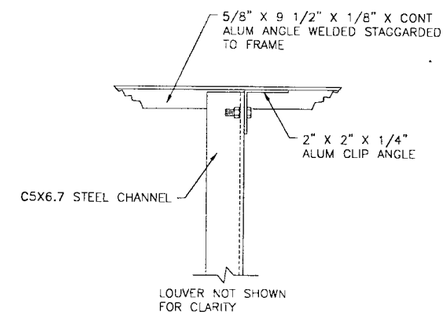

Ⓐ 26 / — HVBS HEAD DETAIL @ ANGLE FRAME (SILL SIM)
N.T.S.
REAR VIEW

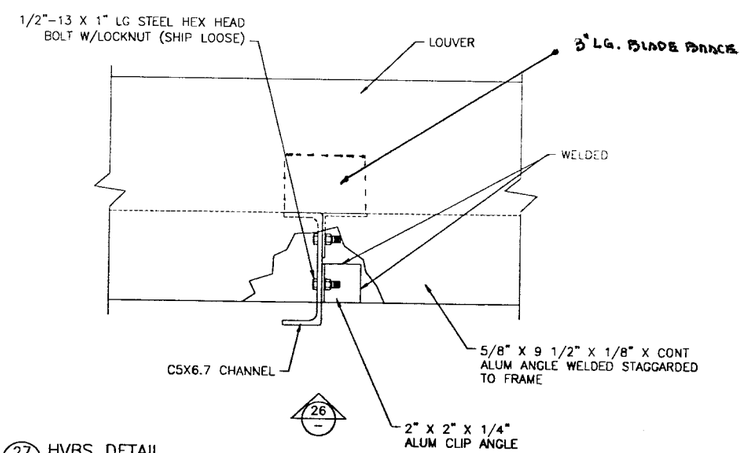

Ⓐ 27 / 01D HVBS DETAIL
N.T.S.

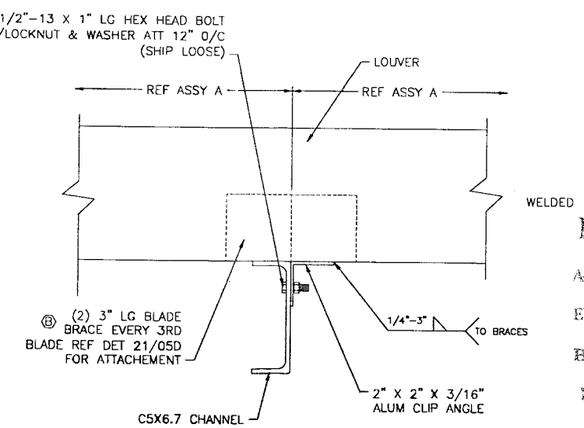

Ⓐ 28 / 01D HVBS DETAIL
N.T.S.

PRODUCT REVIEWED
In compliance with the Florida
Building Code
Application No. 06-0602.04
Expiration Date 07/09/11
By
Product Control Division
BCC Form

PRODUCT REVIEWED
ACCEPTANCE No. 01-0328.04
EXPIRATION DATE 07/09/2006
By
PRODUCT CONTROL DIVISION
BUILDING CODE COMPLIANCE OFFICE

APPROVED AS COMPLYING WITH THE SOUTH FLORIDA BUILDING CODE
DATE February 08, 2001
BY
PRODUCT CONTROL DIVISION
BUILDING CODE COMPLIANCE OFFICE
ACCEPTANCE NO. 00-0830.03
FOR OFFICE USE ONLY

Edward P Hutson Jr
01/03/01

NOTES:
1) REFERENCE DRAWING #60-021562-000 FOR SPECIFICATIONS, SCHEDULE, ASSEMBLIES & ADDITIONAL NOTES

ENGINEER OF RECORD: EDWARD PAUL HUTSON JR.				Ⓑ	REVD DET 21/00D & DET 28/01D	JW					
ENGINEERING DISCIPLINE: STRUCTURAL ENGINEER				Ⓐ	ADDED DET 24,25,26,27 & 28	JW	VMA				10-18-00
REGISTRATION #: STATE OF FLORIDA #0052339				CHANGE LETTER	REVISION DESCRIPTION	DWN. BY:	CHK'D. BY:	APP'VD. BY:	APP'VD. BY:	DATE	
DWN. BY: JTK	CHK. BY: VMA	APP'VD. BY:	APP'VD. BY:	RUSKIN Mfg 3990 BR. Greens RD. Grandview, MO 64030 PROPRIETARY INFORMATION		PLOT SCALE: NONE		DWG. CERTIFIED BY: DATE:			
DATE: 3-9-98	DATE: 10/28/98	DATE:	DATE:								
DADE COUNTY LOUVERS				TITLE: ELF6375DXD LOUVERS DETAILS AND NOTES		DWG. NO. 60-021562-05D					

H:\60\021500\60-021562-05D.dwg Tue Dec 19 09:35:24 2000

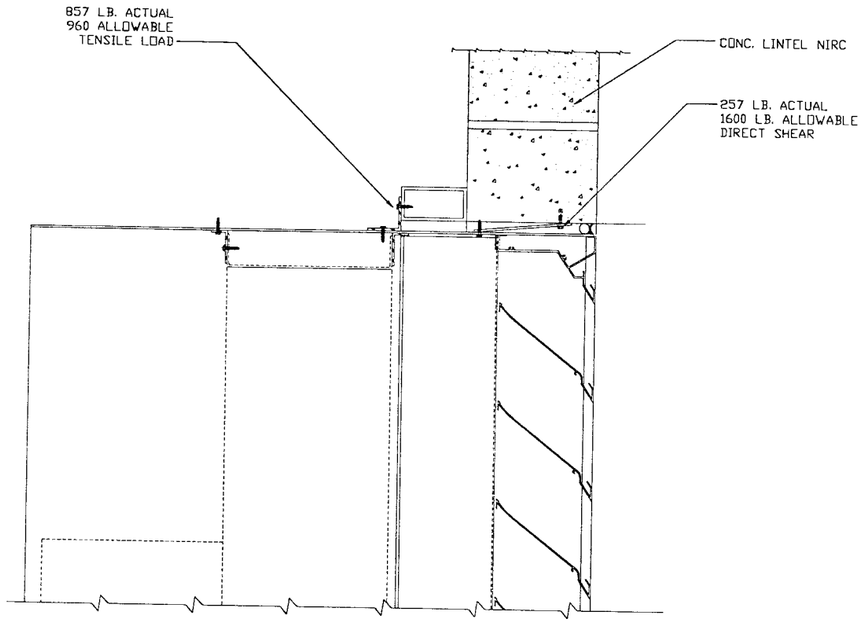

SLEEVED LOUVER DETAILS (JAMB & SILL) (148 PSF) REF DET 7,8, & 9/02D
SCALE: 3" = 1'-0"
@ ASSEMBLY C

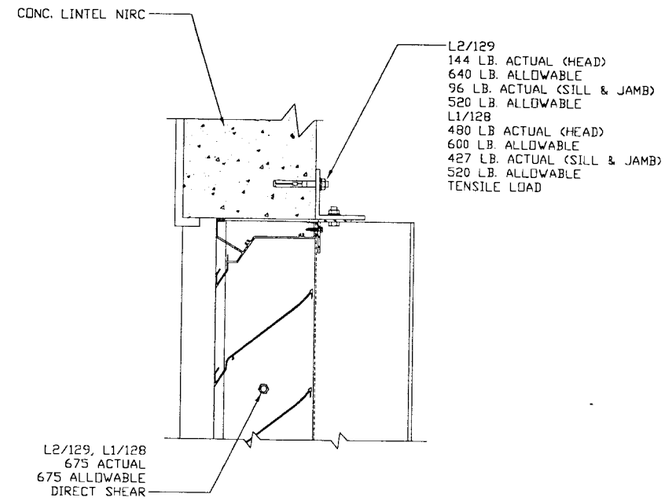

LOUVER DETAIL @HEAD (JAMB & SILL SIM) (138 PSF) REF DET 11 & 13/03D
@ ASSEMBLIES A & B

ALLOWABLE TENSION/SHEAR VALUES FOR THE FASTENERS IN 1/8" ALUMINUM ARE PER "HILTI PRODUCT TECHNICAL GUIDE"

PRODUCT RENEWED
ACCEPTANCE NO. 01-0328.04
EXPIRATION DATE 07/09/2005
By
PRODUCT CONTROL DIVISION
BUILDING CODE COMPLIANCE OFFICE

PRODUCT RENEWED
as complying with the Florida Building Code
Acceptance No. 06-0602.04
Expiration Date 07/09/11
By
Miami Dade Product Control Division

APPROVED AS COMPLYING WITH THE SOUTH FLORIDA BUILDING CODE
DATE February 08, 2001
BY
PRODUCT CONTROL DIVISION
BUILDING CODE COMPLIANCE OFFICE
ACCEPTANCE NO. 00-0830.03

FOR OFFICE USE ONLY

Edward P Hutson Jr.
01/03/01

ENGINEER OF RECORD	EDWARD PAUL HUTSON JR.
ENGINEERING DISCIPLINE	STRUCTURAL ENGINEER
REGISTRATION #	STATE OF FLORIDA #0052339
DWN. BY: JTK	CHK. BY:
DATE: 3-6-98	
DADE COUNTY LOUVERS	
CHANGE LETTER / REVISION DESCRIPTION	
RUSKIN Mfg 3900 DR. Greaves RD. Grandview, MO 64030	PROPRIETARY INFORMATION
PLOT SCALE	NONE
TITLE	ELF6375DXD LOUVER'S DETAIL'S AND NOTES
DWG. NO.	60-021562-13D

H:\60\021500\60-021562-13D.dwg Fri Dec 15 15:13:50 2000

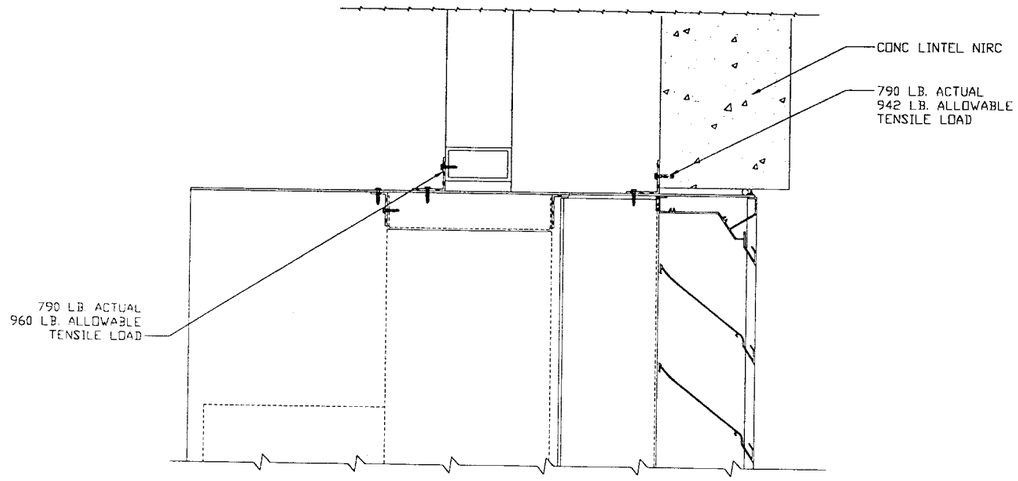

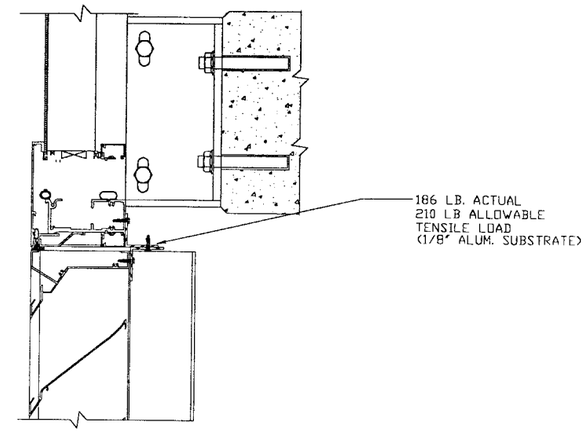

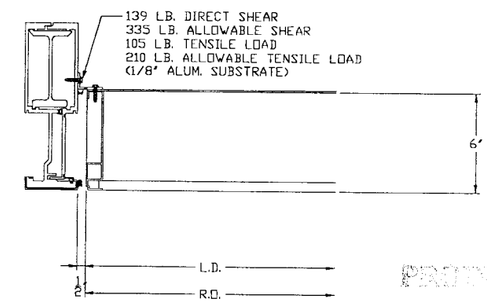

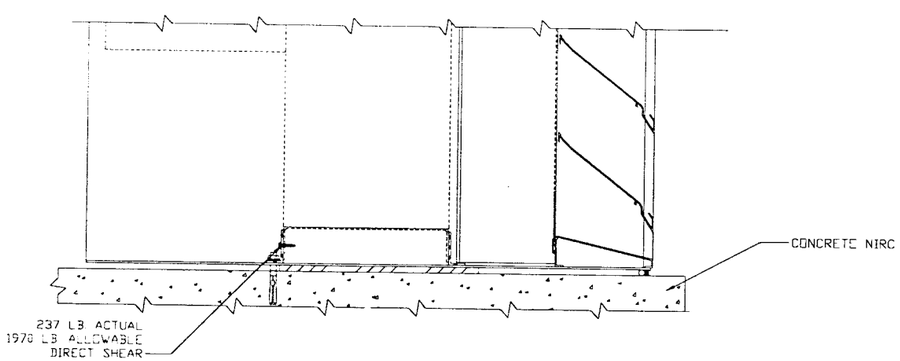

SLEEVED LOUVER DETAILS (JAMB SIM) (138 PSF) REF DET 12 & 14/03D
SCALE: 3" = 1'-0"
@ ASSEMBLY E

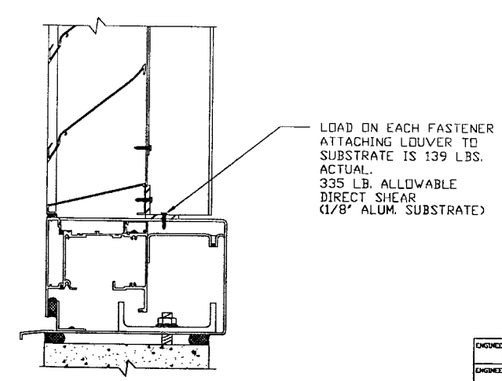

LOUVER DETAILS (138PSF) REF DET 15, 16 &17/04D
SCALE: 3" = 1'-0"
@ ASSEMBLY D

ALLOWABLE TENSION/SHEAR VALUES FOR THE FASTENERS IN 1/8" ALUMINUM ARE PER "HILTI PRODUCT TECHNICAL GUIDE"

PROTECTION REVIEWED
ACCEPTANCE NO. 01-0328.04
EXPIRATION DATE 07/09/2006
By
PRODUCT CONTROL DIVISION
BUILDING CODE COMPLIANCE OFFICE

Accepted 06-0602.04
Expiration Date 07/09/11
By
Miami Dade Product Control Division

Edward P Hutson Jr
01/03/01

APPROVED AS COMPLYING WITH THE SOUTH FLORIDA BUILDING CODE
DATE February 08, 2001
BY
PRODUCT CONTROL DIVISION
BUILDING CODE COMPLIANCE OFFICE
ACCEPTANCE NO. 00-0830.03

FOR OFFICE USE ONLY

ENGINEER OF RECORD	EDWARD PAUL HUTSON JR.
ENGINEERING DISCIPLINE	STRUCTURAL ENGINEER
REGISTRATION #	STATE OF FLORIDA #0052339
DWN. BY: JTK	CHK. BY: / APPV'D. BY: / APPV'D. BY:
DATE: 3-6-98	DATE: / DATE: / DATE:
DADE COUNTY LOUVERS	

CHANGE LETTER	REVISION DESCRIPTION	DWN. BY:	CHK'D. BY:	APPV'D. BY:	APPV'D. BY:	DATE

RUSKIN Mfg 5900 DR. Geaves RD. Grandview, MO 64030
PROPRIETARY INFORMATION
PLOT SCALE: NONE
DWG. CERTIFIED BY: / DATE:
TITLE: ELF6375DXD LOUVER'S DETAIL'S AND NOTES
DWG. NO. 60-021562-14D

H:\60\021500\60-021562-14D.dwg Fri Dec 15 15:14:08 2000

DAMPER SCHEDULE										LOUVER	(NOTE #5)
QTY	A	B	BLD ACT	X	TAG NUMBER	ARRANGEMENT	REQ'D TORQUE PER SECTION	BELIMO ACT. PER SECT.	LOUVER MATCH TAG	SLEEVE I.D. SIZE	
2	151 11/16	91 3/4	OB	20 9/32	AHU-2B MAXIMUM OA INTAKE	6 X 1	257 IN/LBS	GM24	L4/M05	156 X 96	
1	92	113 1/2	OB	18 1/2	MAU'S INTAKE	4 X 2	142 IN/LBS	GM24	L1/144	96 1/4 X 117 3/4	

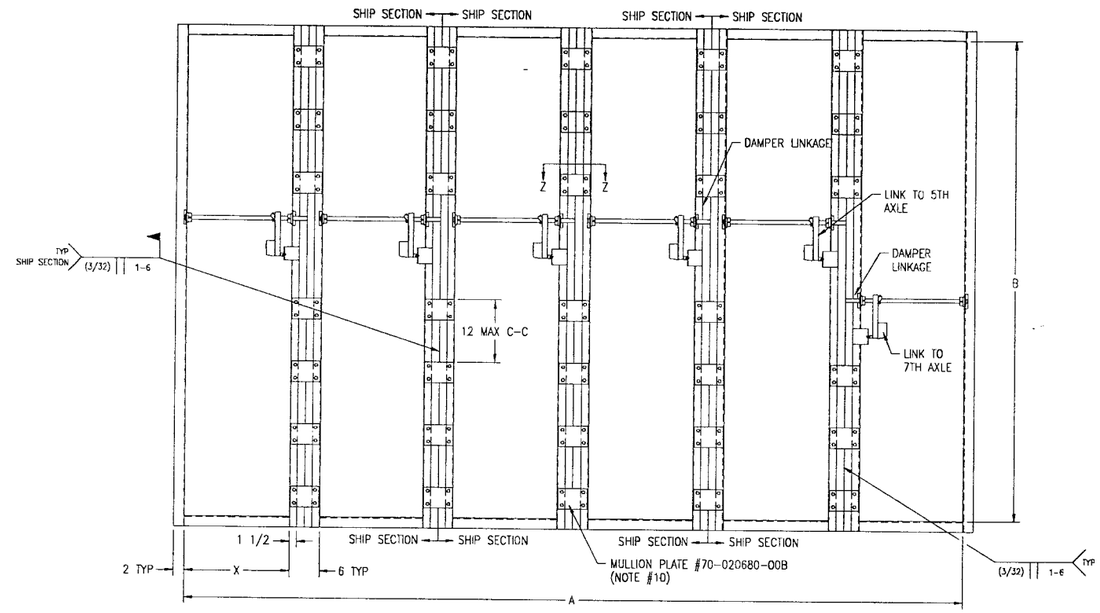

6 X 1 DAMPER ASSEMBLY

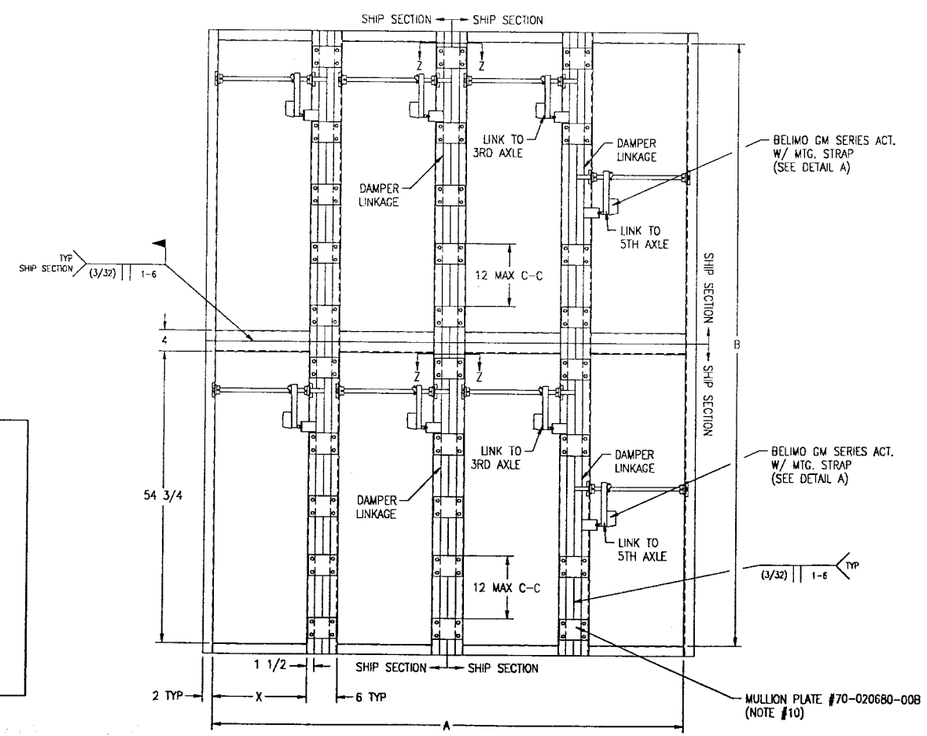

4 X 2 DAMPER ASSEMBLY

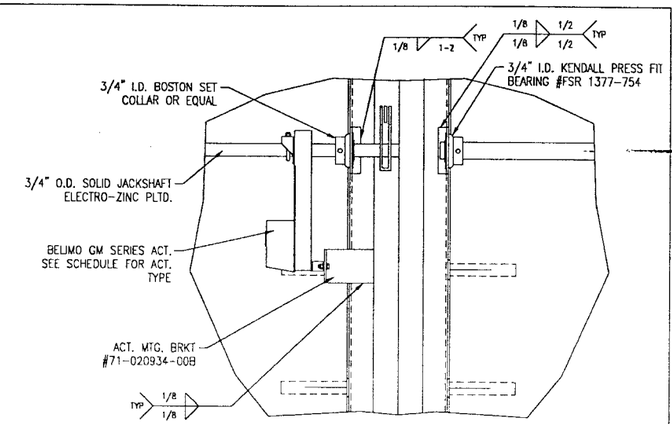

DETAIL A

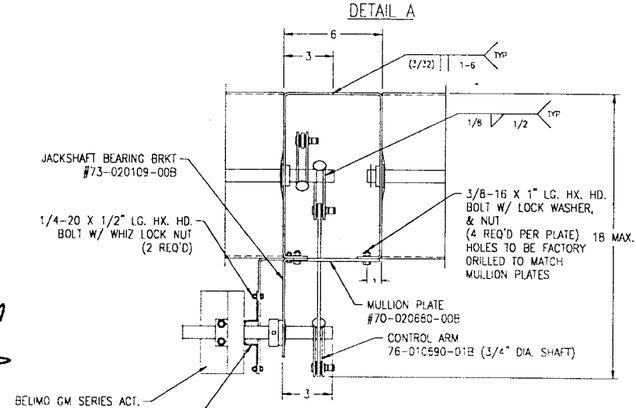

VIEW Z-Z
(SHOWS LINKAGE REQ'D TO OPERATE EACH SECTION NOT SHOWN IN FACE VIEW)

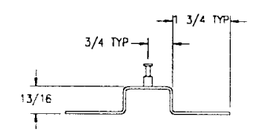

DETAIL B
MODIFY BELIMO MTG. STRAP AS SHOWN

PRODUCT RENEWED
as complying with the Florida Building Code
Acceptance No. 06-0602.04
Expiration Date 07/09/01
By
Miami Dade Product Control Division

PRODUCT RENEWED
ACCEPTANCE NO. 01-0328.04
EXPIRATION DATE 07/09/2006
By
PRODUCT CONTROL DIVISION
BUILDING CODE COMPLIANCE OFFICE

APPROVED AS COMPLYING WITH THE SOUTH FLORIDA BUILDING CODE
DATE February 08, 2001
BY
PRODUCT CONTROL DIVISION
BUILDING CODE COMPLIANCE OFFICE
ACCEPTANCE NO. 00-0830.03

Edward P Hutson Jr
01/03/01

NOTES:
1. SEE SPEC. SHEET FOR DAMPER CONSTRUCTION DETAILS & DIMENSIONS. GALVANIZED FRAME, ALUM. BLADE & PLTD STEEL AXLES.
2. DELETED
3. EACH DAMPER SECTION TO OPERATE INDEPENDENT OF EACH OTHER.
4. TORQUES BASED ON 5" W.G. @ 530 FPM.
5. ALL DAMPER MUST BE INSTALLED IN SLEEVE IN FIELD AS SHOWN IN DWG. NO. 60-021562-02D & 60-021562-03D.
6. SEE SCHEDULE FOR TYPE OF ACTUATOR TO MOUNT PER DAMPER.
7. BLADE WIDTH 24" MAX. BASED ON LOAD OF 168 PSF WIND LOAD (32.3" W.G.).
8. LINKAGE NOT TO EXTEND PAST DAMPERS OUTSIDE FLANGES. JACKSHAFT MAY BE MOVED (1) AXLE LOWER TO PREVENT THIS.
9. DELETED
10. SPACE MULLION PLATES ON 12" C-C MAX IN DAMPERS 'B' DIM., STRADDLING ALL MOUNTING BRACKETS.
11. ALL DAMPERS TO BE PROVIDED W/ STN. STL. JAMB SEALS 80-012019-00B & SILICONE BLADE SEALS 80-008170-01A.

FOR OFFICE USE ONLY

UNLESS OTHERWISE SPECIFIED USE STANDARD ENGINEERING TOLERANCES

ENGINEER OF RECORD: EDWARD PAUL HUTSON JR.							
ENGINEERING DISCIPLINE: STRUCTURAL ENGINEER							
REGISTRATION #: STATE OF FLORIDA #0052339	CHANGE LETTER	REVISION DESCRIPTION	DWN. BY:	CHK'D. BY:	APPV'D. BY:	APPV'D. BY:	DATE
DWN. BY: REB DATE: 04/22/98	CHK. BY: DATE:	APPV'D. BY: DATE:	APPV'D. BY: DATE:	RUSKIN Mfg. Grandview, MO PROPRIETARY INFORMATION	PLOT SCALE NONE	DWG. CERTIFIED BY: DATE:	
DADE COUNTY LOUVERS				TITLE CD102 DAMPER ASSEMBLY	DWG. NO. 60-021562-15D		

H:\60\021500\60-021562-15D.dwg Fri Dec 15 15:14:26 2000