MIAMI-DADE COUNTY
BUILDING CODE COMPLIANCE OFFICE (BCCO)
PRODUCT CONTROL DIVISION

MIAMI-DADE COUNTY, FLORIDA
METRO-DADE FLAGLER BUILDING

140 WEST FLAGLER STREET, SUITE 1603
MIAMI, FLORIDA 33130-1563
(305) 375-2901 FAX (305) 375-2908
www.miamidade.gov

# NOTICE OF ACCEPTANCE (NOA)

**New F & P Aluminum screen, Inc.**
**1001 East 24th Street**
**Hialeah, Florida 33013**

## SCOPE:

This NOA is being issued under the applicable rules and regulations governing the use of construction materials. The documentation submitted has been reviewed by Miami-Dade County Product Control Division and accepted by the Board of Rules and Appeals (BORA) to be used in Miami Dade County and other areas where allowed by the Authority Having Jurisdiction (AHJ).

This NOA shall not be valid after the expiration date stated below. The Miami-Dade County Product Control Division (In Miami Dade County) and/or the AHJ (in areas other than Miami Dade County) reserve the right to have this product or material tested for quality assurance purposes. If this product or material fails to perform in the accepted manner, the manufacturer will incur the expense of such testing and the AHJ may immediately revoke, modify, or suspend the use of such product or material within their jurisdiction. BORA reserves the right to revoke this acceptance, if it is determined by Miami-Dade County Product Control Division that this product or material fails to meet the requirements of the applicable building code.

This product is approved as described herein, and has been designed to comply with the High Velocity Hurricane Zone of the Florida Building Code.

**DESCRIPTION: SSA / ( 6.8" – HR ) Aluminum Accordion Shutter**

**APPROVAL DOCUMENT:** Drawing No. 06-388, titled " 6.8 – HR Accordion Shutter ", sheets 1 through 13 of 13, prepared by Thornton-Tomasetti Group, dated June 30, 2005, last revision #1 dated December 16, 2005, signed and sealed by J.W. Knezevich, P.E., bearing the Miami-Dade County Product Control Revision stamp with the Notice of Acceptance number and expiration date by the Miami-Dade County Product Control Division.

**MISSILE IMPACT RATING: Large and Small Missile Impact**

**LABELING:** Each unit shall bear a permanent label with the manufacturer's name or logo, city, state and the following statement: "Miami-Dade County Product Control Approved", unless otherwise noted herein.

**RENEWAL** of this NOA shall be considered after a renewal application has been filed and there has been no change in the applicable building code negatively affecting the performance of this product.

**TERMINATION** of this NOA will occur after the expiration date or if there has been a revision or change in the materials, use, and/or manufacture of the product or process. Misuse of this NOA as an endorsement of any product, for sales, advertising or any other purposes shall automatically terminate this NOA. Failure to comply with any section of this NOA shall be cause for termination and removal of NOA.

**ADVERTISEMENT:** The NOA number preceded by the words Miami-Dade County, Florida, and followed by the expiration date may be displayed in advertising literature. If any portion of the NOA is displayed, then it shall be done in its entirety.

**INSPECTION:** A copy of this entire NOA shall be provided to the user by the manufacturer or its distributors and shall be available for inspection at the job site at the request of the Building Official.

This NOA **revises NOA # 03-0717.03** and consists of this page 1, evidence submitted pages E-1, E-2, and E-3 as well as approval document mentioned above.

The submitted documentation was reviewed by **Helmy A. Makar, P.E.**

Helmy A. Makar
08/31/2006

**NOA No 06-0608.02**
**Expiration Date: 07/11/2008**
**Approval Date: 08/31/2006**

**New F & P Aluminum screen, Inc.**

## NOTICE OF ACCEPTANCE: EVIDENCE SUBMITTED

### 1. EVIDENCE SUBMITTED UNDER PREVIOUS APPROVAL # 00-0501.01

**A. DRAWINGS**

1. *Drawing No. 00-913, prepared by Knezevich & Associates, Inc., titled " 6.8" Accordion Shutter", dated December 8, 1998, last revision #2 dated April 13, 2000, sheets 1 through 6 of 6, signed and sealed by V. J. Knezevich, P.E.*

**B. TESTS**

1. *See Association's generic approval number 00-0047.*

**C. CALCULATIONS**

1. *See Association's generic approval number 00-0047.*

**D. MATERIAL CERTIFICATIONS**

1. *See Association's generic approval number 00-0047.*

**E. STATEMENTS**

1. *Release letter issued by the Southern Shutter Association, Inc., dated June 9, 2000, certifying this product to meet the criteria of product tested and approved, and allowing F & P Aluminum Screen, Inc. to use the test results approved under Miami-Dade County Approval No. 00-0047, signed by Mr. Robin, Sec. Treasurer.*
2. *Acknowledgment letter by New F & P Aluminum Screen, Inc. dated June 29, 2000, signed by Mr. Lester U. Jimenez.*
3. *Letter by Knezevich & Associates, Inc., dated February 29, 2000, certifying that the drawing (No. 00-913) prepared for F & P Aluminum Screen, Inc., signed and sealed by V.J. Knezevich, P.E., is engineering wise identical to Southern Shutter Association, Inc generic drawing (No. 98-254).*
4. *Acceptance Letter issued to Mr. Lester U. Jimenez on June 27, 2000 and returned signed by Mr. Lester U. Jimenez on June 29, 2000, indicating to please issue the proposed Notice of Acceptance as submitted and reviewed.*

### 2. EVIDENCE SUBMITTED UNDER PREVIOUS APPROVAL # 03-0717.03

**A. DRAWINGS**

1. *Drawing No. 03-906, titled " 6.8 – HR Accordion Shutter ", sheets 1 through 12 of 12, prepared by Knezevich & Associates, Inc., dated April 09, 2003, last revision #2 dated July 29, 2003, signed and sealed by V.J. Knezevich, P.E.*

**B. TESTS**

1. *None. See Association's generic approval number 03-0118.*

**Helmy A. Makar, P. E.**
**Product Control Examiner**
**NOA No 06-0608.02**
**Expiration Date: 07/11/2008**
**Approval Date: 08/31/2006**

## NOTICE OF ACCEPTANCE: EVIDENCE SUBMITTED

**C. CALCULATIONS**

1. *None. See Association's generic approval number 03-0118.*

**D. QUALITY ASSURANCE**

1. *By Miami-Dade County Building Code Compliance Office.*

**E. MATERIAL CERTIFICATIONS**

1. *None. See Association's generic approval number 03-0118.*

**F. STATEMENTS**

1. *Letter by Knezevich & Associates, Inc. dated September 11, 2003, certifying that the drawing (No. 03-906) prepared for New F & P Aluminum screen, Inc., signed and sealed by V.J. Knezevich, P.E., is engineering wise identical to Southern Shutter Association, Inc generic drawing (No. 03-258).*

**3. NEW EVIDENCE SUBMITTED**

**A. DRAWINGS**

1. *Drawing No. 06-388, titled " 6.8 – HR Accordion Shutter ", sheets 1 through 13 of 13, prepared by Thornton-Tomasetti Group, dated June 30, 2005, last revision #1 dated December 16, 2005, signed and sealed by J.W. Knezevich, P.E.*

**B. TESTS**

1. *None. See Association's generic approval number 05-0217.*

**C. CALCULATIONS**

1. *None. See Association's generic approval number 05-0217.*

**D. QUALITY ASSURANCE**

1. *By Miami-Dade County Building Code Compliance Office.*

**E. MATERIAL CERTIFICATIONS**

1. *None. See Association's generic approval number 05-0217.*

**F. STATEMENTS**

1. *Release letter issued by the Southern Shutter Association, Inc., dated May 11, 2006, certifying this product to meet the criteria of product tested and approved, and allowing F & P Aluminum Screen, Inc. to use the test results approved under Miami-Dade County Approval No. 05-0217, signed by Mr. Thomas Johnston.*

**Helmy A. Makar, P. E.**
**Product Control Examiner**
**NOA No 06-0608.02**
**Expiration Date: 07/11/2008**
**Approval Date: 08/31/2006**

**New F & P Aluminum screen, Inc.**

## NOTICE OF ACCEPTANCE: EVIDENCE SUBMITTED

2. *Acknowledgment letter by New F & P Aluminum Screen, Inc. dated April 24, 2006, signed by Mr. Lester U. Jimenez.*
3. *Letter by Thornton-Tomasetti Group, dated May 9, 2006, certifying that the drawing (No. 06-388) prepared for F & P Aluminum Screen, Inc., signed and sealed by J.W. Knezevich, P.E., is engineering wise identical to Southern Shutter Association, Inc generic drawing (No. 05-376).*
4. *Acceptance Letter issued to Mr. Lester U. Jimenez on August 27, 2006 and returned signed by Mr. Lester U. Jimenez on August 31, 2006, indicating to please issue the proposed Notice of Acceptance as submitted and reviewed.*

**Helmy A. Makar, P. E.**
**Product Control Examiner**
**NOA No 06-0608.02**
**Expiration Date: 07/11/2008**
**Approval Date: 08/31/2006**

# THESE APPROVAL DOCUMENTS REPRESENT
## THE 6.8 AND THE HR ACCORDION SHUTTER SYSTEMS

**GENERAL NOTES:**

1. THESE APPROVAL DOCUMENTS REPRESENT A SHUTTER SYSTEM ANALYZED WITH THE PROVISION SET FOR THE ISSUANCE OF A NOTICE OF ACCEPTANCE (NOA) BY MIAMI-DADE COUNTY PRODUCT CONTROL DIVISION FOR THE HIGH VELOCITY HURRICANE ZONE (HVHZ) OF THE FLORIDA BUILDING CODE 2004 EDITION WITH 2005 SUPPLEMENT
2. NO INCREASE IN ALLOWABLE STRESS HAS BEEN USED IN THE DESIGN OF THESE PRODUCTS. WIND LOAD DURATION FACTOR Cd = 1.6 WAS USED FOR WOOD LAG SCREW DESIGN.
3. DETERMINE THE POSITIVE AND NEGATIVE DESIGN LOADS TO USE WHEN REFERENCING THESE DOCUMENTS IN ACCORDANCE WITH THE GOVERNING CODE AND GOVERNING WIND VELOCITY. FOR WIND LOAD CALCULATIONS IN ACCORDANCE WITH ASCE 7-02, A DIRECTIONALITY FACTOR OF Kd =0.85 SHALL BE USED.
4. THESE APPROVAL DOCUMENTS ARE GENERIC AND DO NOT INCLUDE INFORMATION FOR SITE-SPECIFIC APPLICATION OF THIS SHUTTER SYSTEM.
5. USE OF THESE APPROVAL DOCUMENTS SHALL COMPLY WITH CHAPTER 61G15-23 OF THE FLORIDA ADMINISTRATIVE CODE.
6. THESE APPROVAL DOCUMENTS ARE SUITABLE TO BE APPLIED BY THE CONTRACTOR PROVIDED THE CONTRACTOR DOES NOT DEVIATE FROM THE CONDITIONS DETAILED HEREIN AND THE CONTRACTOR VERIFIES THAT THE EXISTING STRUCTURE DOES NOT DEVIATE IN EITHER FORM OR MATERIAL FROM THE STRUCTURAL SUBSTRATES DETAILED HEREIN.
7. ANY MODIFICATIONS OR ADDITIONS TO THESE APPROVAL DOCUMENTS WILL VOID THE APPROVAL DOCUMENTS.
8. WHEN THE SITE CONDITIONS DEVIATE FROM THESE APPROVAL DOCUMENTS, THE BUILDING OFFICIAL MAY ELECT ONE OF THE FOLLOWING OPTIONS:
   - A) REQUIRE THAT SITE SPECIFIC DOCUMENTS BE PREPARED, SIGNED, DATED AND SEALED BY A LICENSED ENGINEER OR REGISTERED ARCHITECT, WHICH DETAIL AND JUSTIFY THE DEVIATION. AS A CONDITION TO THE BUILDING OFFICIAL GRANTING HIS/HER APPROVAL.
   - B) REQUIRE THAT A ONE-TIME SITE SPECIFIC APPROVAL BE APPLIED FOR AND SECURED FROM THE MIAMI-DADE COUNTY PRODUCT CONTROL DIVISION.

   WHEN THE SITE CONDITION DEVIATIONS OCCUR WITHIN THE HIGH VELOCITY HURRICANE ZONE AREAS, ONLY OPTION "B" SHALL BE ACCEPTED BY THE BUILDING OFFICIAL.
9. EACH SHUTTER ASSEMBLY SHALL BE PERMANENTLY LABELED AS FOLLOWS:

   **NEW F & P ALUMINUM SCREEN, INC.**
   **HIALEAH, FLORIDA**
   **MIAMI-DADE COUNTY PRODUCT CONTROL APPROVED**
10. ALL EXTRUSIONS SHOWN SHALL BE 6063-T6 ALUMINUM ALLOY, U.O.N., WITH A MINIMUM Fy OF 30.125 K.S.I.
11. ALL BOLTS AND WASHERS SHALL BE STAINLESS STEEL WITH A MINIMUM TENSILE STRENGTH OF 60 K.S.I., U.O.N. POP RIVETS SHALL BE 1/4"Ø OR 3/16"Ø 5052 ALUM. ALLOY.
12. ALL SHUTTERS SHALL HAVE A LOCKING MECHANISM CONSISTING OF THUMBSCREW, PUSH LOCK OR BOX LOCK AT CENTER OR SIDE CLOSURE.
13. TOP AND BOTTOM DETAILS MAY BE INTERCHANGED AS FIELD CONDITIONS REQUIRE.
14. FLOOR TRACKS MAY BE REMOVABLE AT NON-STACKING LOCATIONS. USE REMOVABLE ANCHORS.
15. ALL EXTRUSIONS CAN BE USED FOR THE 6.8 OR THE HR ACCORDION SHUTTER SYSTEMS, U.O.N.
16. THE HR ACCORDION SHUTTER SLAT HAS A BULGE @ CENTER OF SLAT TO DISTINGUISH FROM THE 6.8 ACCORDION SHUTTER SLAT.

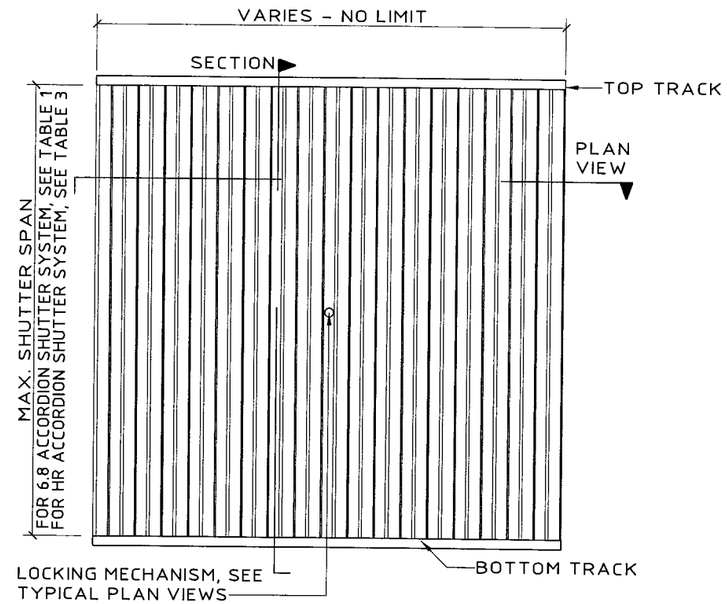


**TYPICAL ACCORDION SHUTTER ELEVATION**
N.T.S.

PRODUCT REVISED
as complying with the Florida
Buiding Code
Acceptance No. 06-0608.02
Expiration Date 07/11/2008
By Helena A. Molina
Miami Dade Product Control
Division


Thornton-Tomasetti Group
330 N. Andrews Ave., Suite 450 • Ft. Lauderdale, FL 33301
Tel. (954) 522-3690 • Fax (954) 522-3691 • COA # 7519
Website: www.TheTTGroup.com



Copyright © 2006 Thornton-Tomasetti Group, Inc.
6.8 & HR SYSTEMS LICENSED BY SOUTHERN SHUTTER ASSOCIATION


6.8 - HR
ACCORDION SHUTTER

NEW F & P ALUMINUM SCREEN, INC.
1001 EAST 24TH STREET
HIALEAH, FLORIDA 33013
TEL(305) 693-0017 • FAX(305) 693-4939


J.W. Knezevich
Professional Engineer
FL License No.: PE 0041961


MAY 01 2006

| revisions | | | |
|---|---|---|---|
| no | date | by | description |
| 0 | 06/30/05 | NW | PREVIOUSLY DRAWING NO. 02-256 |
| 1 | 12/16/05 | VJK | NEW COMPONENTS |

SSA I.D. # 060501053760

date 06/30/2005
scale AS NOTED
drawn by MCR
design by JWK
checked by JWK
drawing no. 06-388
sheet 1 of 13


Print Information: P:\FL1\KA\CADD\Associations\SSA\F_and_P\06-388\R1-sub\06-388-01.dwg AVazquez 05/01/2006 01:42:32pm 05/01/06 13:37

# ACCORDION SHUTTER COMPONENTS
## FOR 6.8 & HR ACCORDION SHUTTER SYSTEMS

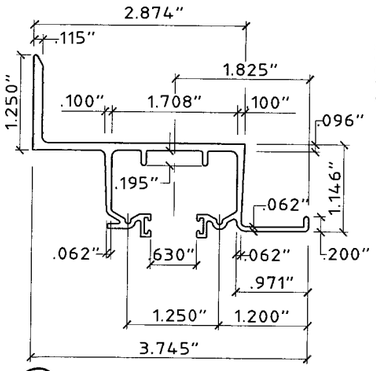


**1 WALL HEADER (6.8 ONLY)**
SCALE: HALF SIZE

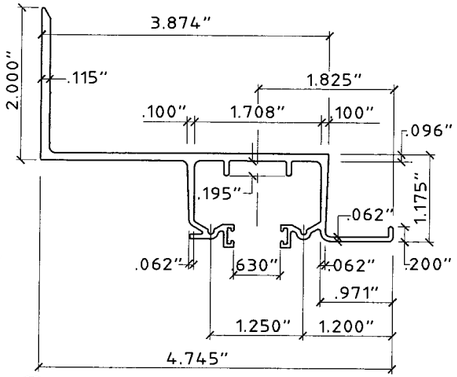


**2 BUILD OUT WALL HEADER (6.8 ONLY)**
SCALE: HALF SIZE

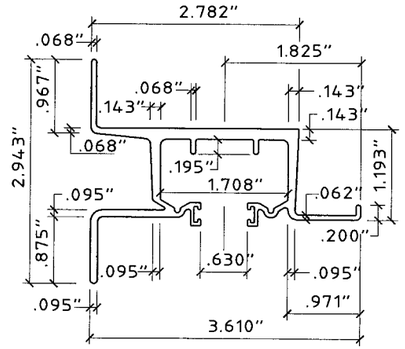


**3 HEAVY WALL HEADER**
SCALE: HALF SIZE

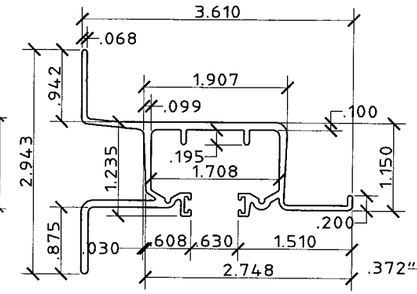


**4 LITE WALL HEADER**
SCALE: HALF SIZE

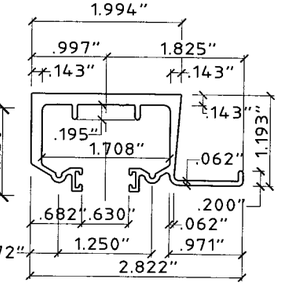


**5 HEAVY HEADER**
SCALE: HALF SIZE

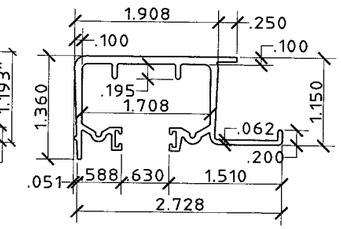


**6 LITE HEADER**
SCALE: HALF SIZE

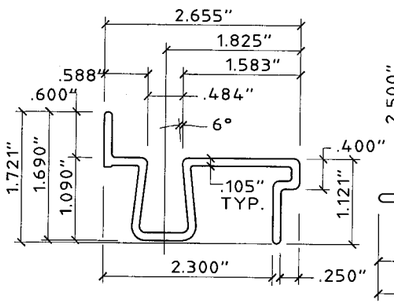


**7 BASE SILL**
SCALE: HALF SIZE

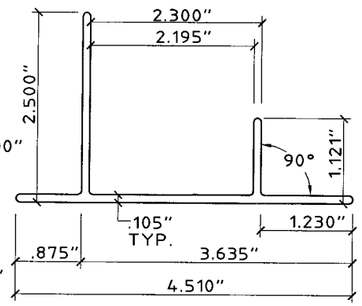


**8 BASE TRACK**
SCALE: HALF SIZE

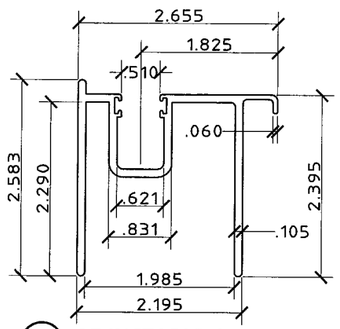


**9 ADJUSTABLE SILL**
SCALE: HALF SIZE

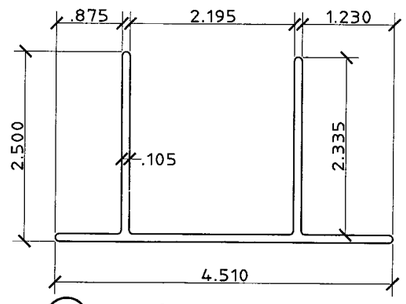


**10 ADJUSTABLE SILL BASE**
SCALE: HALF SIZE

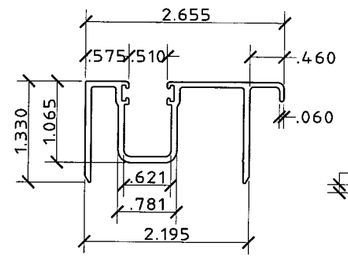


**11 ADJUSTABLE SILL**
SCALE: HALF SIZE

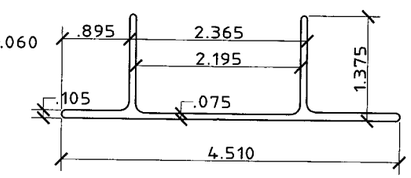


**12 ADJUSTABLE SILL BASE**
SCALE: HALF SIZE

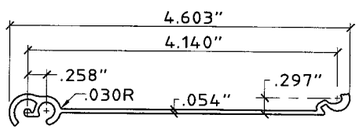


**13 TYP. 6.8 SLAT**
SCALE: HALF SIZE

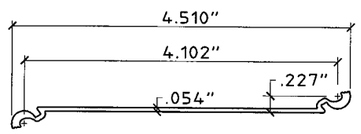


**15 ALT. 6.8 SLAT**
SCALE: HALF SIZE

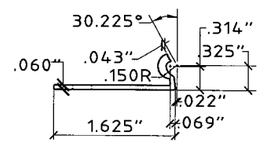


**17 6.8 STARTER**
SCALE: HALF SIZE

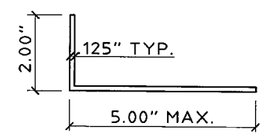


**19 ANGLE (6.8 ONLY)**
SCALE: 3" = 1' - 0"

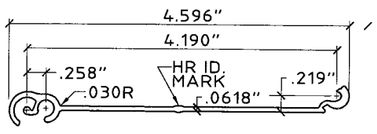


**14 TYP. HR SLAT**
SCALE: HALF SIZE

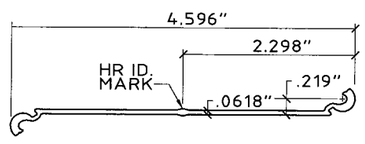


**16 ALT. HR SLAT**
SCALE: HALF SIZE

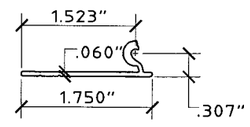


**18 HR STARTER**
SCALE: HALF SIZE

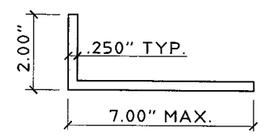


**20 ANGLE (HR ONLY)**
SCALE: 3" = 1' - 0"

PRODUCT REVISED
as complying with the Florida
Building Code
Acceptance No. 06-0608.02
Expiration Date 07/11/2008
By [signature]
Miami Dade Product Control
Division


Thornton-Tomasetti Group
330 N. Andrews Ave., Suite 450 • Ft. Lauderdale, FL 33301
Tel. (954) 522-3690 • Fax (954) 522-3691 • COA # 7519
Website: www.TheTTGroup.com



Copyright © 2006 Thornton-Tomasetti Group, Inc.
6.8 & HR SYSTEMS LICENSED BY SOUTHERN SHUTTER ASSOCIATION


6.8 - HR
ACCORDION SHUTTER


NEW F & P ALUMINUM SCREEN, INC.
1001 EAST 24TH STREET
HIALEAH, FLORIDA 33013
TEL(305) 693-3017 • FAX(305) 693-4939


J.W. Knezevich
Professional Engineer
FL License No.: PE 0041961

MAY 01 2006

revisions

| no | date | by | description |
|---|---|---|---|
| 0 | 06/30/05 | NW | PREVIOUSLY DRAWING NO. 03-258 |
| 1 | 12/16/05 | VJK | NEW COMPONENTS |

SSA I.D. # 060501053 76D

date 06/30/2005
scale AS NOTED
drawn by MCR
design by JWK
checked by JWK
drawing no. 06-388
sheet 2 of 13


Print Information: P:\FL1\KA\CADD\Associations\SSA\F_and_P\06-388\R1-sub\06-388-02.dwg AVazquez 05/01/2006 02:04:21pm 05/01/06 14:04

# ACCORDION SHUTTER COMPONENTS
## FOR 6.8 & HR ACCORDION SHUTTER SYSTEMS

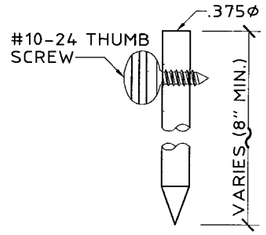


FOR USE WITH (33) AND (34) ONLY

**(21) SLIDE ROD**
SCALE: HALF SIZE

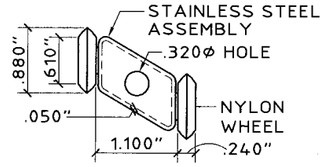


TYP. AT EVERY OTHER INSIDE JOINT AT TOP.

**(22) ROLLER ASSEMBLY**
SCALE: HALF SIZE

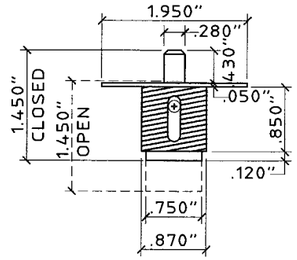


**(23) BRASS PUSH LOCK**
SCALE: HALF SIZE

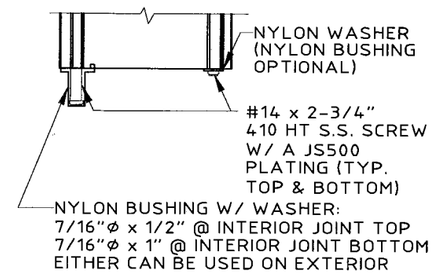


**(24) BUSHING ASSEMBLY DETAIL**
SCALE: HALF SIZE

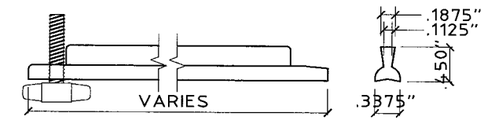


**FOR 6.8 & HR WHERE LOCK PINS ARE USED, THEY ARE ENGAGED IN THE STACKED POSITION & AREN'T REQ'D IN THE CLOSED POSITION.**

**(25) ALUMINUM OR PVC LOCK PIN (NOT REQUIRED)**
SCALE: HALF SIZE

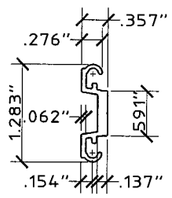


**(26) CENTER BOX INSERT**
SCALE: HALF SIZE

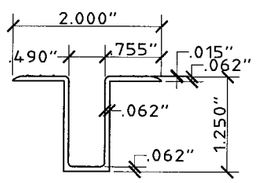


**(27) RECESS SILL (6.8 ONLY)**
SCALE: HALF SIZE

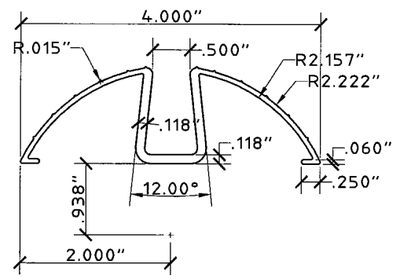


**(28) DECORATIVE FLOOR TRACK (6.8 ONLY)**
SCALE: HALF SIZE

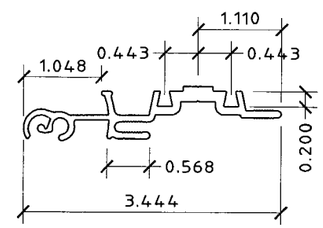


**(29a) (6.8 ONLY) MALE/FEMALE LOCK**
SCALE: HALF SIZE

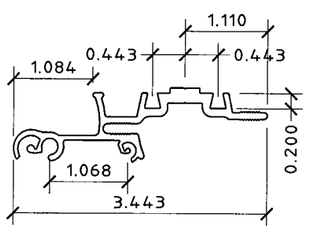


**(29b) (6.8 ONLY) MALE/FEMALE LOCK**
SCALE: HALF SIZE

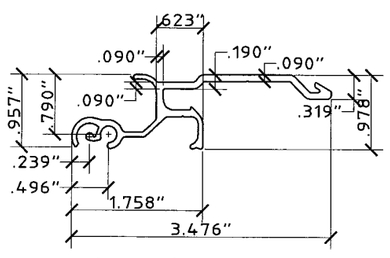


**(30) (6.8 ONLY) UNIMATE LOCK**
SCALE: HALF SIZE

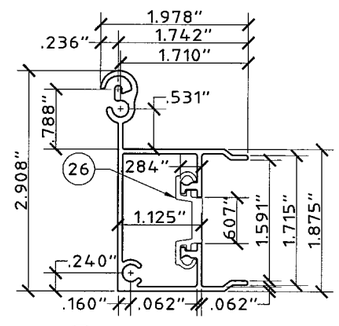


**(31) MALE BOX CENTER**
SCALE: HALF SIZE

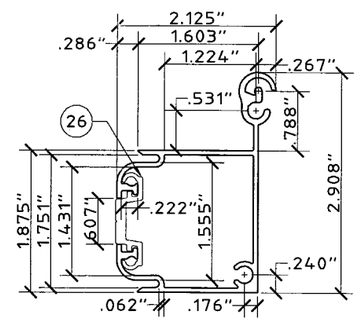


**(32) FEMALE BOX CENTER**
SCALE: HALF SIZE

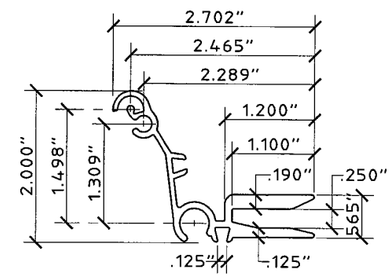


**(33) CENTER MATE 1**
SCALE: HALF SIZE

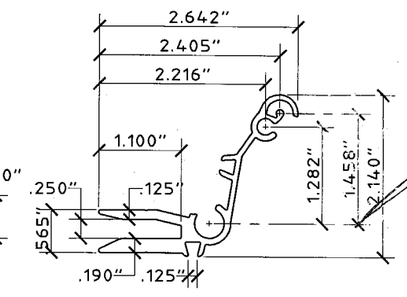


**(34) CENTER MATE 2**
SCALE: HALF SIZE

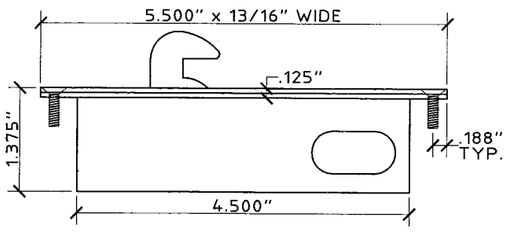


DELTA MODEL 2022 INDUSTRIAL SYSTEMS

**(35) BOX LOCK**
SCALE: HALF SIZE

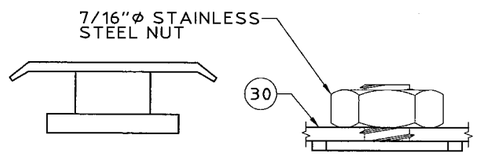


**(36) (6.8 ONLY) T-ADAPTER (OPTIONAL)**
SCALE: HALF SIZE

5/16-18 STAINLESS STEEL THREADED INTERNAL FOR # 30

**(37) (6.8 ONLY) THREADED INSERT**
SCALE: FULL SIZE

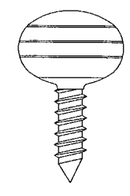

1/4-20x1 OR 5/16-18x1 MACHINE SCREW STAINLESS STEEL

**(38) THUMB SCREW**
SCALE: FULL SIZE

PRODUCT REVISED
as complying with the Florida
Building Code
Acceptance No 06-0608.02
Expiration Date 07/11/2008
By Helena A. Molina
Miami Dade Product Control
Division


Thornton-Tomasetti Group
330 N. Andrews Ave., Suite 450 • Ft. Lauderdale, FL 33301
Tel. (954) 522-3690 • Fax (954) 522-3691 • COA # 7319
Website: www.TheTTGroup.com



Copyright © 2006 Thornton-Tomasetti Group, Inc.
6.8 & HR SYSTEMS LICENSED BY SOUTHERN SHUTTER ASSOCIATION


6.8 - HR
ACCORDION SHUTTER

NEW


1001 EAST 24TH STREET
HIALEAH, FLORIDA 33013
TEL(305) 693-0017 • FAX(305) 693-4939
F & P ALUMINUM SCREEN, INC.


J.W. Knezevich
Professional Engineer
FL License No.: PE 0041961

MAY 01 2006

revisions

| no | date | by | description |
|---|---|---|---|
| 0 | 06/30/05 | JWK | PREVIOUSLY DRAWING NO. 03-258 |
| 1 | 12/16/05 | VJK | NEW COMPONENTS |

SSA I.D. # 060501053 76D

date 06/30/2005
scale AS NOTED
drawn by MCR
design by JWK
checked by JWK
drawing no. 06-388
sheet 3 of 13

Print Information: P:\FL1\KA\CADD\Associations\SSA\F_and_P\06-388\R1-sub\06-388-03.dwg AVazquez 05/01/2006 02:02:38pm 05/01/06 13:03

# 6.8 ACCORDION SHUTTER

**NOT APPLICABLE TO HR ACCORDION SHUTTER**

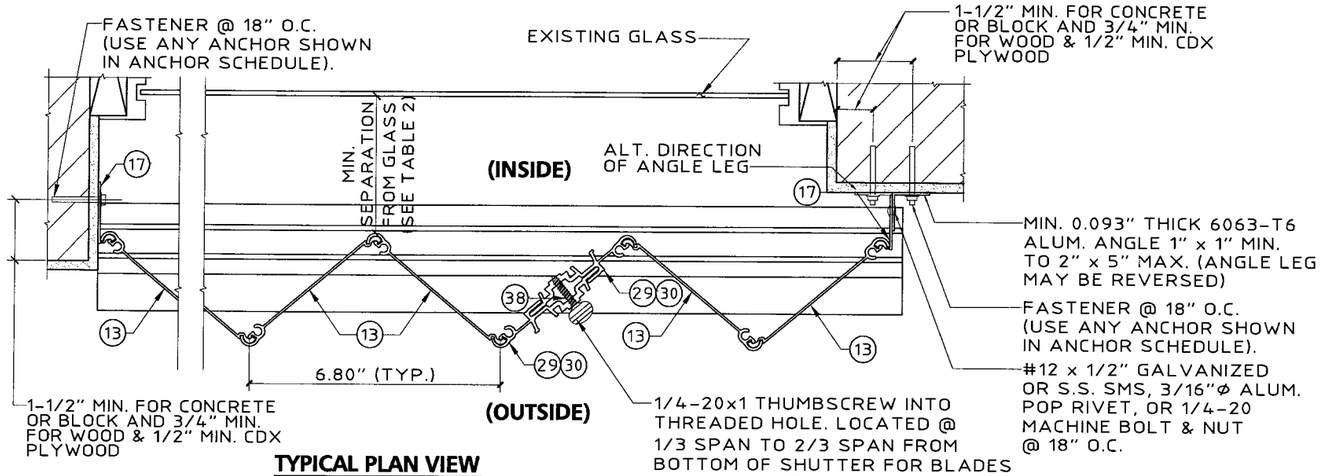


**TYPICAL PLAN VIEW**

SCALE: 3" = 1'-0"

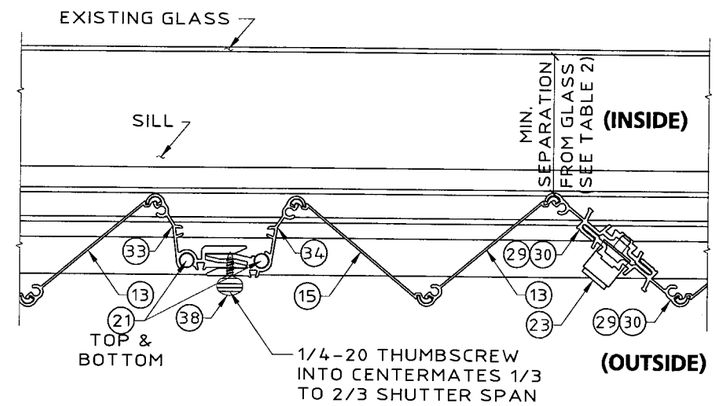


**MULTIPLE SHUTTER ASSEMBLY**

SCALE: 3" = 1'-0"

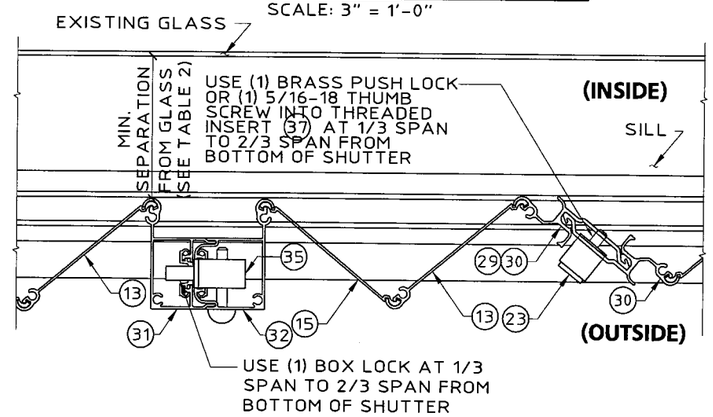


**MULTIPLE SHUTTER ASSEMBLY**

SCALE: 3" = 1'-0"

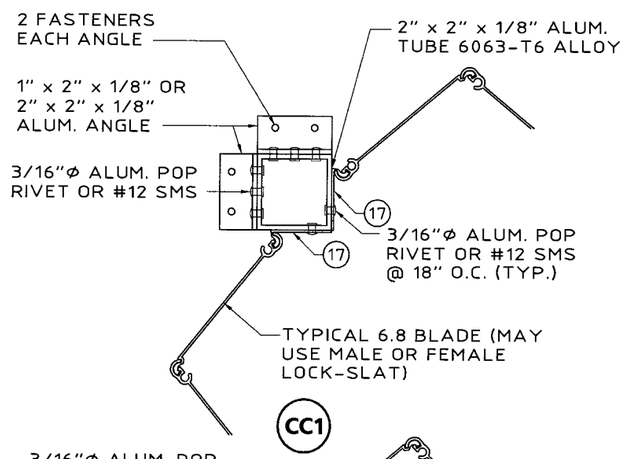


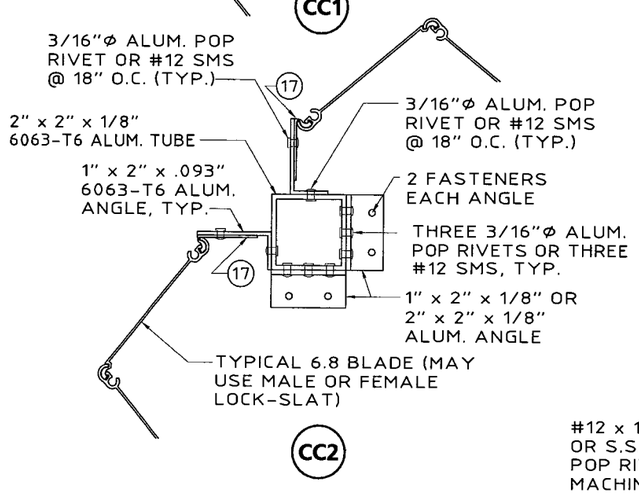


**TYPICAL CORNER CLOSURE DETAILS**

SCALE: 3" = 1'-0"

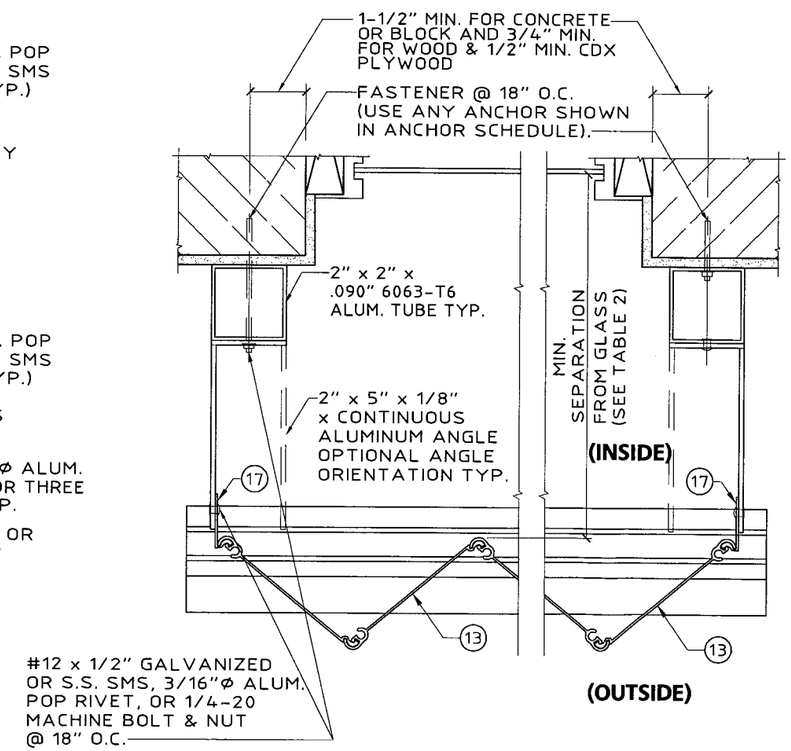


**SIDE CLOSURE OPTIONS**

SCALE: 3" = 1'-0"

PRODUCT REVISED
as complying with the Florida Building Code
Acceptance No. 06-0608.02
Expiration Date 07/11/2008
By Helena A. Hale
Miami Dade Product Control Division


Thornton-Tomasetti Group
330 N. Andrews Ave., Suite 450 • Ft. Lauderdale, FL 33301
Tel. (954) 522-3690 • Fax (954) 522-3691 • COA # 7519
Website: www.TheTTGroup.com



Copyright © 2006 Thornton-Tomasetti Group, Inc.
6.8 & HR SYSTEMS LICENSED BY SOUTHERN SHUTTER ASSOCIATION


6.8 - HR ACCORDION SHUTTER


NEW F & P ALUMINUM SCREEN, INC.
1001 EAST 24TH STREET
HIALEAH, FLORIDA 33013
TEL(305) 693-0017 • FAX(305) 693-4939


J.W. Knezevich
Professional Engineer
FL License No.: PE 0041961

MAY 01 2006

revisions

| no | date | by | description |
|---|---|---|---|
| 0 | 06/30/05 | NW | PREVIOUSLY DRAWING NO. 03-258 |
| 1 | 12/16/05 | V.JK | NEW COMPONENTS |

SSA I.D. # 060501053376D

| | |
|---|---|
| date 06/30/2005 | |
| scale AS NOTED | drawn by MCR |
| design by JWK | checked by JWK |
| drawing no. 06-388 | |
| sheet 4 of 13 | |


Print Information: P:\FL1\KA\CADD\Associations\SSA\F_and_P\06-388\R1-sub\06-388-04.dwg AVazquez 05/01/2006 02:01:46pm 05/01/06 13:37

# 6.8 ACCORDION SHUTTER

**NOT APPLICABLE TO HR ACCORDION SHUTTER**

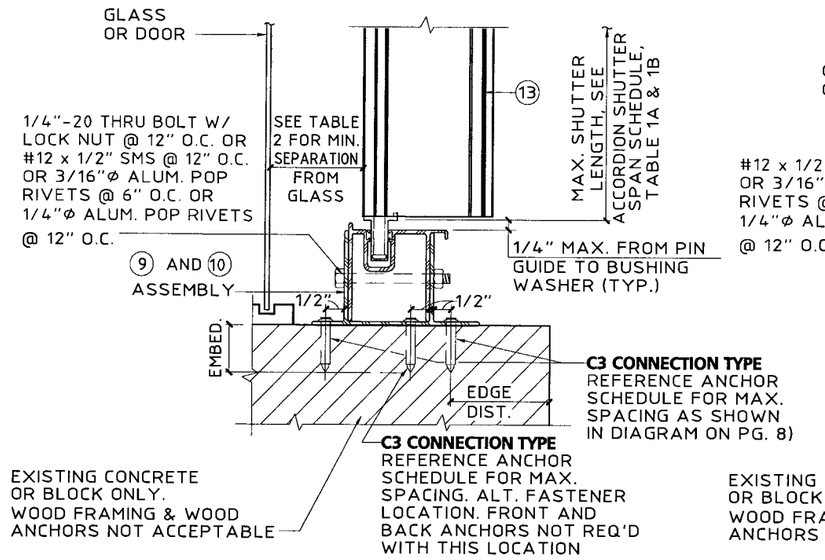


**A INSIDE MOUNT SECTION**
SCALE : 3"= 1'- 0"

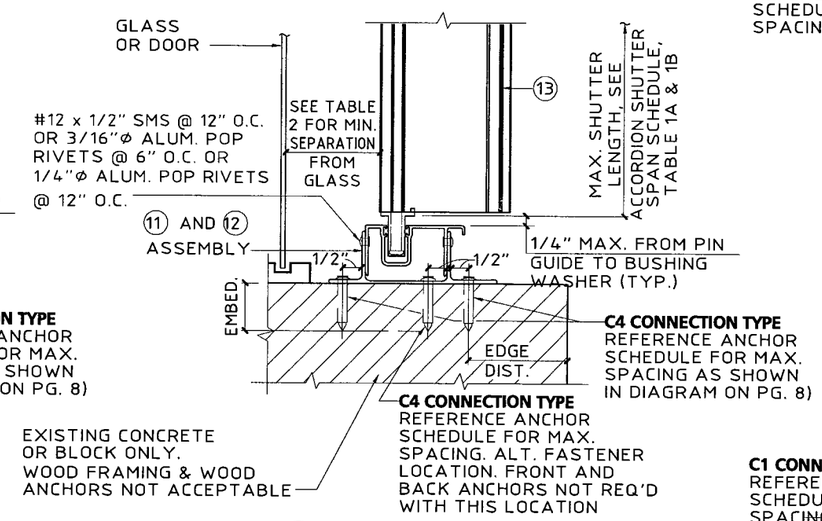


**B INSIDE MOUNT SECTION**
SCALE : 3"= 1'- 0"

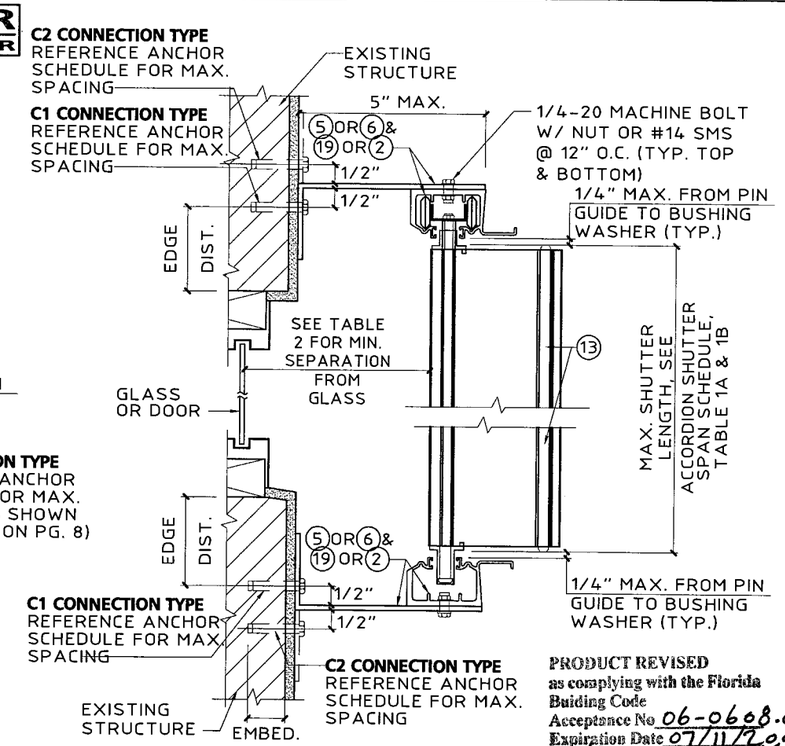


**C BUILD OUT MOUNT SECTION**
SCALE : 3"= 1'- 0"

PRODUCT REVISED
as complying with the Florida Building Code
Acceptance No. 06-0608.02
Expiration Date 07/11/2008
By Helena A. Alder
Miami Dade Product Control Division

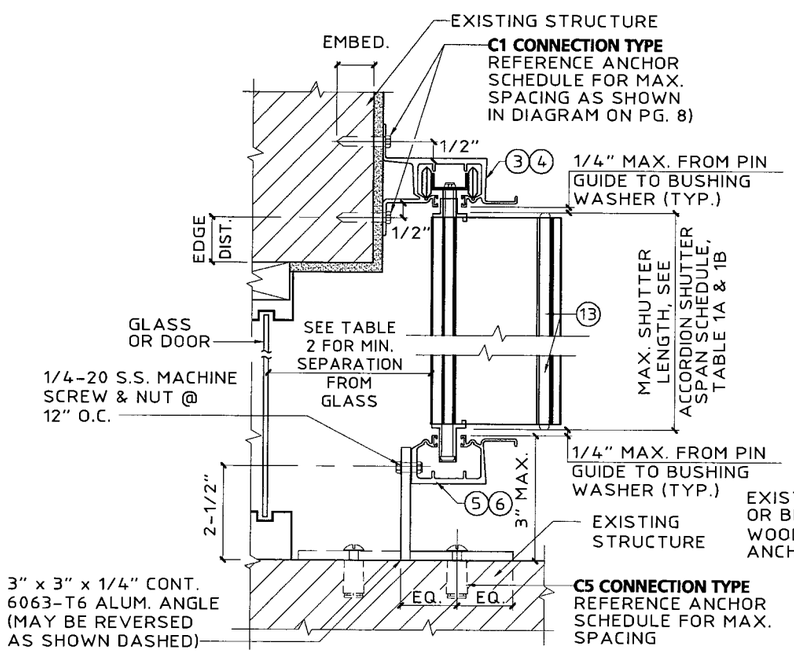


**D WALL MOUNT SECTION**
SCALE : 3"= 1'- 0"

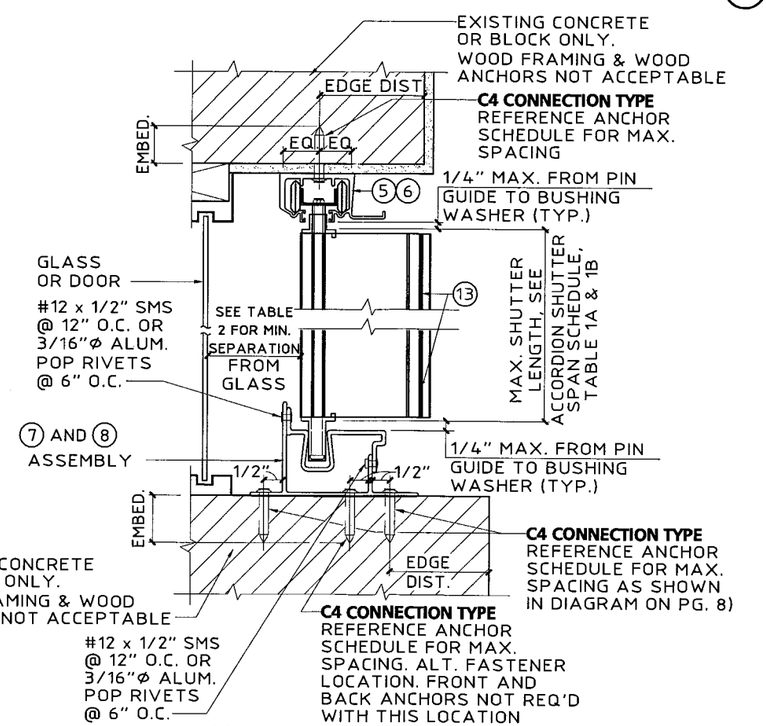


**E CEILING / INSIDE MOUNT SECTION**
SCALE : 3"= 1'- 0"

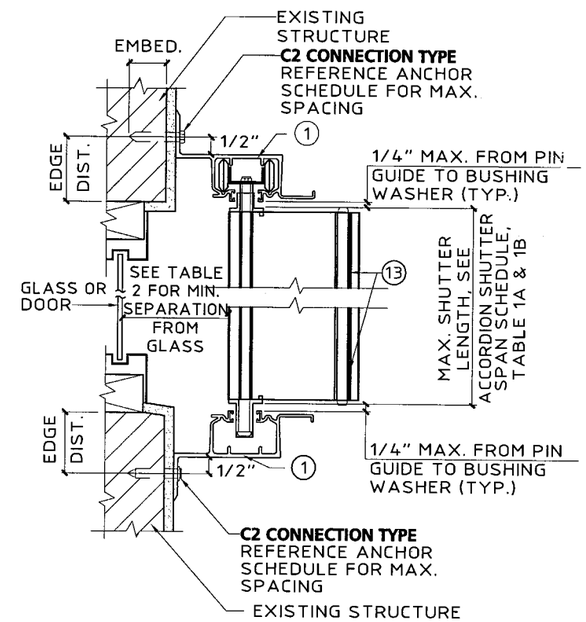


**F WALL MOUNT SECTION**
SCALE : 3"= 1'- 0"


Thornton-Tomasetti Group
330 N. Andrews Ave., Suite 450 • Ft. Lauderdale, FL 33301
Tel. (954) 522-3690 • Fax (954) 522-3691 • COA # 7519
Website: www.TheTGroup.com



Copyright © 2006 Thornton-Tomasetti Group, Inc.
6.8 & HR SYSTEMS LICENSED BY SOUTHERN SHUTTER ASSOCIATION


6.8 - HR
ACCORDION SHUTTER

NEW F&P ALUMINUM SCREEN, INC.
1001 EAST 24TH STREET
HIALEAH, FLORIDA 33013
TEL(305) 693-0017 • FAX(305) 693-4939

J.W. Knezevich
Professional Engineer
FL License No.: PE C041961

MAY 01 2006

revisions

| no | date | by | description |
|---|---|---|---|
| 0 | 06/30/05 | NW | PREVIOUSLY DRAWING NO. 03-258 |
| 1 | 12/16/05 | VJK | NEW COMPONENTS |

SSA I.D. # 0605010537 6D

date 06/30/2005
scale AS NOTED
drawn by MCR
design by JWK
checked by JWK
drawing no. 06-388
sheet 5 of 13

Print Information: P:\FL1\KA\CADD\Associations\SSA\F_and_P\06-388\R1-sub\06-388-05.dwg AVazquez 05/01/2006 02:01:17pm 05/01/06 13:21

# 6.8 ACCORDION SHUTTER

**NOT APPLICABLE TO HR ACCORDION SHUTTER**

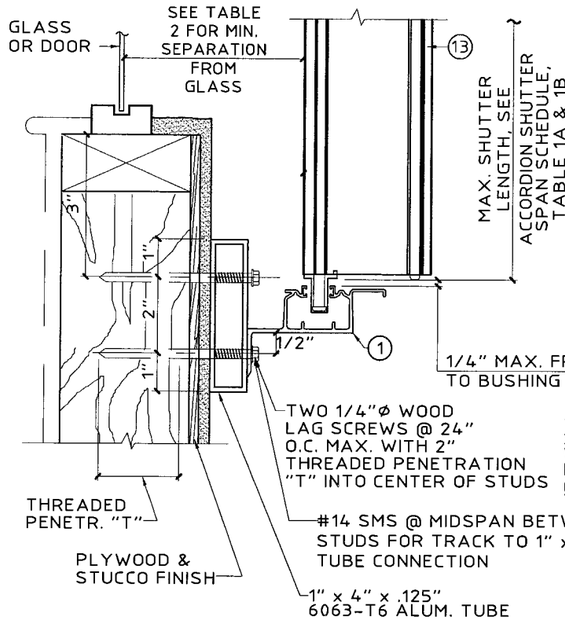


NOTE: THIS DETAIL MAY BE USED AT TOP MAX. DESIGN LOAD = 72 P.S.F.

## G WALL MOUNT SECTION

SCALE : 3"= 1'- 0"

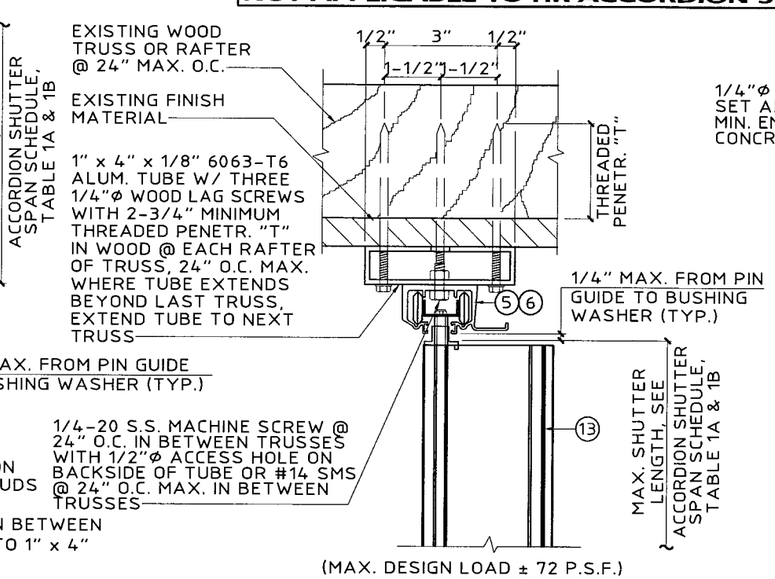


## H TRUSS MOUNT SECTION

SCALE : 3"= 1'- 0"

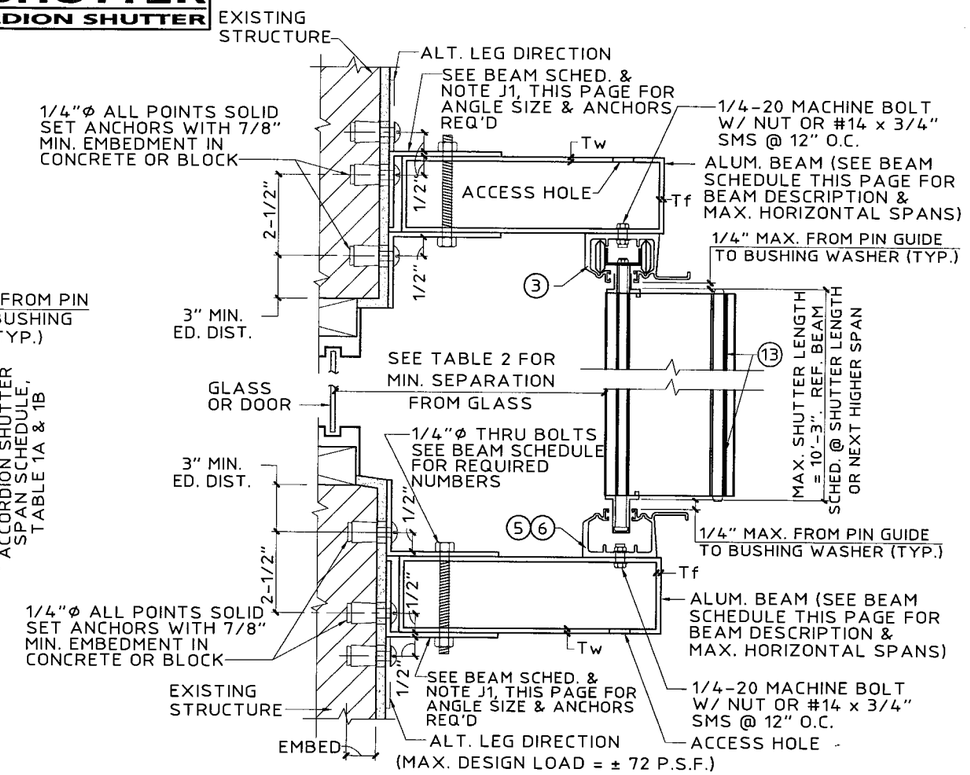


## J BUILD-OUT MOUNT SECTION

SCALE : 3"= 1'- 0"

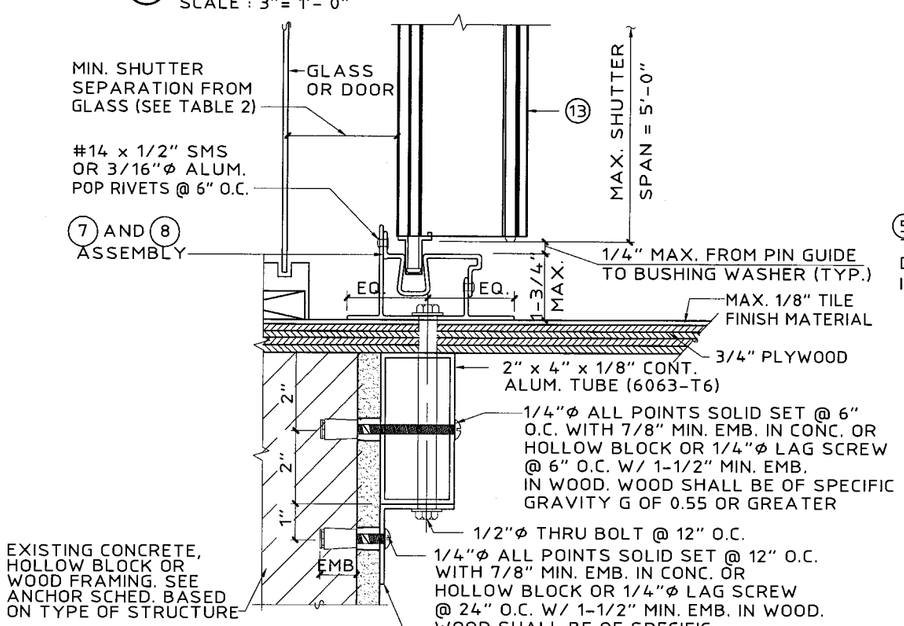


## K PASS THRU DETAIL

SCALE : 3"= 1'- 0"

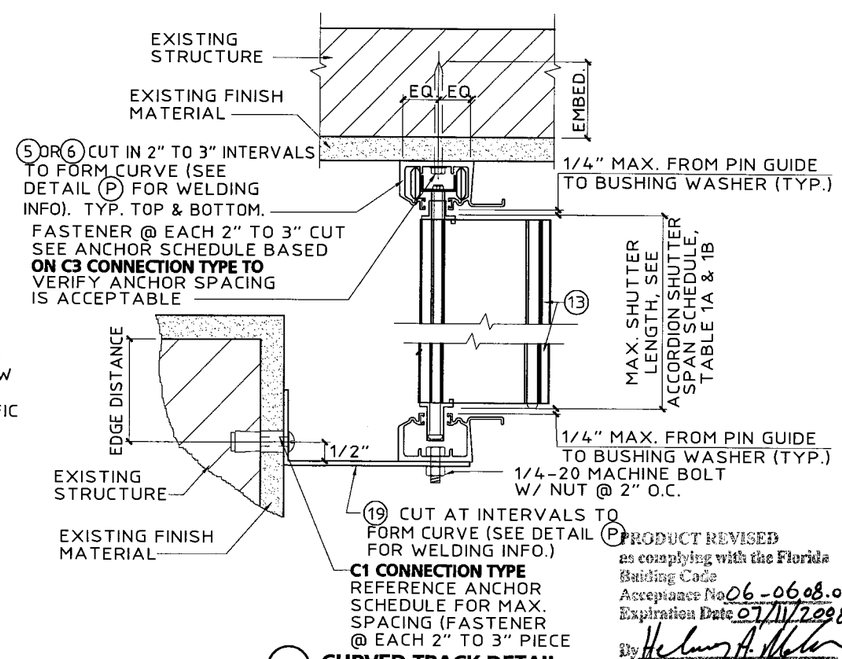


## L CURVED TRACK DETAIL

SCALE : 3"= 1'- 0"

PRODUCT REVISED
as complying with the Florida Building Code
Acceptance No. 06-0608.02
Expiration Date 07/11/2008
By Helmy A. Abdelnour
Miami Dade Product Control Division

## *BEAM SCHEDULE

| DESCRIPTION | SHUTTER SPAN | TOP BEAM | BOTTOM BEAM | No. OF THRU BOLT TOP BEAM | No. OF THRU BOLT BOT. BEAM | No. OF 1/4"Ø ALL POINTS ANCHORS EA. ANGLE TOP BEAM | No. OF 1/4"Ø ALL POINTS ANCHORS EA. ANGLE BOT. BEAM |
|---|---|---|---|---|---|---|---|
| 2" x 5" BB Tw = .125" Tf = .125" | 5'-0" | 9'-0" | 9'-5" | 2 | 2 | 2 | 2 |
| | 8'-0" | 8'-0" | 8'-1" | 2 | 2 | 2 | 2 |
| | 10'-3" | 7'-6" | 7'-5" | 2 | 2 | 2 | 2 |
| 2" x 7" LB Tw = .072" Tf = .130" | 5'-0" | 8'-9" | 11'-8" | 2 | 2 | 2 | 2 |
| | 8'-0" | 7'-9" | 9'-6" | 2 | 2 | 2 | 2 |
| | 10'-3" | 7'-4" | 8'-5" | 2 | 2 | 2 | 3 |
| 2" x 9" LB Tw = .072" Tf = .224" | 5'-0" | 9'-3" | 15'-2" | 2 | 2 | 2 | 2 |
| | 8'-0" | 8'-3" | 12'-2" | 2 | 3 | 2 | 3 |
| | 10'-3" | 7'-9" | 10'-10" | 2 | 3 | 2 | 3 |

*

**BEAM SCHEDULE NOTES:**

1. USE BEAM SCHEDULE FOR DETAIL J.
2. TOP & BOTTOM BEAMS MAY BE USED TOGETHER OR IN COMBINATION WITH OTHER CONNECTION DETAILS. WHERE USED TOGETHER, BEAM MUST BE LIMITED TO TOP BEAM SPANS.
3. LAP BEAMS (LB) SHALL BE INSTALLED WITH #14 TEK SCREWS @ 8" O.C. AT CENTER OF EACH 2" FLANGE.
4. BB DENOTES BOX BEAM.

**NOTE J1:**

2"x3"x1/4"6063-T6 ALUMINUM ANGLE TOP & BOTTOM.
USE 6" LONG ANGLES FOR TWO REQUIRED THRU BOLTS OR 1/4"Ø ALL POINTS ANCHORS IN EACH ANGLE.
USE 9" LONG ANGLES FOR THREE REQUIRED THRU BOLTS OR 1/4"Ø ALL POINTS ANCHORS IN EACH ANGLE.


Thornton-Tomasetti Group
330 N. Andrews Ave., Suite 450 • Ft. Lauderdale, FL 33301
Tel. (954) 522-3690 • Fax (954) 522-3691 • COA # 7519
Website: www.TheTTGroup.com



Copyright © 2006 Thornton-Tomasetti Group, Inc.
6.8 & HR SYSTEMS LICENSED BY SOUTHERN SHUTTER ASSOCIATION


6.8 - HR ACCORDION SHUTTER


NEW F & P ALUMINUM SCREEN, INC.
1001 EAST 24TH STREET
HIALEAH, FLORIDA 33013
TEL(305) 693-0017 • FAX(305) 693-4939


J.W. Knezevich
Professional Engineer
FL License No.: PE 0041961

MAY 01 2006

revisions

| no | date | by | description |
|---|---|---|---|
| 0 | 06/30/05 | NW | PREVIOUSLY DRAWING NO. 03-258 |
| 1 | 12/16/05 | VJK | NEW COMPONENTS |

SSA I.D. # 060501053376D

| | |
|---|---|
| date 06/30/2005 | |
| scale AS NOTED | drawn by MCR |
| design by JWK | checked by JWK |
| drawing no. 06-388 | |
| sheet 6 of 13 | |


Print Information: P:\FL1\KA\CADD\Associations\SSA\F_and_P\06-388\R1-sub\06-388-06.dwg AVazquez 05/01/2006 02:00:50pm 05/01/06 13:28

# 6.8 ACCORDION SHUTTER

**NOT APPLICABLE TO HR ACCORDION SHUTTER**

**TABLE 1A — ACCORDION SHUTTER SPAN SCHEDULE FOR ALL LOCKING CONDITIONS, EXCEPT FOR UNIMATE LOCK**

| DESIGN WIND LOAD W (P.S.F.) | POSITIVE WIND LOAD L max. (FT – IN) | NEGATIVE WIND LOAD L max. (FT – IN) |
|---|---|---|
| 30.0 | 12–9 | 12–9 |
| 35.0 | 12–4 | 12–9 |
| 40.0 | 11–11 | 12–9 |
| 45.0 | 11–7 | 12–9 |
| 50.0 | 11–3 | 12–9 |
| 55.0 | 11–0 | 12–9 |
| 60.0 | 10–9 | 12–4 |
| 65.0 | 10–6 | 11–6 |
| 70.0 | 10–4 | 10–8 |
| 72.0 | 10–3 | 10–4 |
| 75.0 | 10–2 | 9–11 |
| 80.0 | 9–11 | 9–4 |
| 90.0 | 9–7 | 8–4 |
| 100.0 | 9–3 | 8–3 |
| 110.0 | 9–0 | 8–3 |
| 120.0 | 8–8 | 8–3 |
| 130.0 | 8–4 | 8–3 |
| 133.0 | 8–3 | 8–3 |
| 140.0 | 7–11 | 7–11 |
| 150.0 | 7–5 | 7–5 |
| 160.0 | 6–11 | 6–11 |
| 170.0 | 6–6 | 6–6 |
| 180.0 | 6–2 | 6–2 |
| 190.0 | 5–10 | 5–10 |
| 200.0 | 5–6 | 5–6 |

**TABLE 1B — ACCORDION SHUTTER SPAN SCHEDULE FOR UNIMATE LOCK ONLY**

| DESIGN WIND LOAD W (P.S.F.) | POSITIVE WIND LOAD L max. (FT – IN) | NEGATIVE WIND LOAD L max. (FT – IN) |
|---|---|---|
| 30.0 | 12–9 | 12–9 |
| 35.0 | 12–4 | 12–9 |
| 40.0 | 11–11 | 12–9 |
| 45.0 | 11–7 | 12–5 |
| 50.0 | 11–2 | 11–2 |
| 55.0 | 10–9 | 10–9 |
| 60.0 | 10–4 | 10–4 |
| 65.0 | 10–0 | 10–0 |
| 70.0 | 9–8 | 9–8 |
| 75.0 | 9–5 | 9–5 |
| 80.0 | 9–2 | 9–2 |
| 85.0 | 9–0 | 9–0 |
| 90.0 | 8–11 | 8–11 |
| 100.0 | 8–9 | 8–9 |
| 110.0 | 8–7 | 8–7 |
| 120.0 | 8–5 | 8–5 |
| 130.0 | 8–3 | 8–3 |
| 140.0 | 7–7 | 7–7 |
| 150.0 | 7–1 | 7–1 |
| 160.0 | 6–8 | 6–8 |
| 170.0 | 6–3 | 6–3 |
| 180.0 | 5–11 | 5–11 |
| 190.0 | 5–7 | 5–7 |
| 200.0 | 5–4 | 5–4 |

**TABLE 1A & 1B NOTES:**

1. DETERMINE BOTH THE POSITIVE AND THE NEGATIVE WIND LOADS. CHECK THEIR RESPECTIVE SPANS AND USE THE LESSER VALUE OF THE TWO.
2. FOR DESIGN LOADS BETWEEN TABULATED VALUES USE NEXT HIGHER LOAD OR LINEAR INTERPOLATION MAY BE USED TO DETERMINE ALLOWABLE SPANS.

**TABLE 2 NOTE:**

1. ENTER TABLE 2 WITH POSITIVE DESIGN LOAD TO DETERMINE MIN. STORM SHUTTER SEPARATION FROM GLASS.

**TABLE 2 — MINIMUM SHUTTER SEPARATION FROM GLASS**

| POSITIVE DESIGN LOAD (W) (P.S.F.) | ACTUAL SHUTTER SPAN (L) (FT – IN) | MIN. SEPARATION FROM GLASS FOR INSTALLATIONS LESS THAN OR EQUAL TO 30' ABOVE GRADE (IN.) | MIN. SEPARATION FROM GLASS FOR INSTALLATIONS GREATER THAN 30' ABOVE GRADE (IN.) |
|---|---|---|---|
| 40.0 | 8–3 | 3–1/8 | 1–5/8 |
| | 10–0 | 3–3/4 | 2–1/8 |
| | 11–11 | 3–3/4 | 3 |
| 50.0 | 8–3 | 3–1/8 | 1–3/4 |
| | 10–0 | 3–3/4 | 2–3/8 |
| | 11–3 | 3–3/4 | 3 |
| 60.0 | 5–0 | 3–1/8 | 1–1/4 |
| | 8–3 | 3–1/8 | 1–7/8 |
| | 10–9 | 3–3/4 | 3 |
| 70.0 | 5–0 | 3–1/8 | 1–1/8 |
| | 8–3 | 3–1/8 | 1–7/8 |
| | 10–4 | 3–3/4 | 3 |
| 80.0 | 6–0 | 3–1/8 | 1–3/8 |
| | 8–3 | 3–1/8 | 2–1/8 |
| | 9–4 | 3–3/4 | 2–5/8 |
| 90.0 | 5–0 | 3–1/8 | 1–3/8 |
| | 7–0 | 3–1/8 | 1–5/8 |
| | 8–3 | 3–1/8 | 2–1/8 |
| 100.0 | 5–0 | 3–1/8 | 1–3/8 |
| | 7–0 | 3–1/8 | 1–3/4 |
| | 8–3 | 3–1/8 | 2–1/4 |
| 110.0 | 5–0 | 3–1/8 | 1–3/8 |
| | 7–0 | 3–1/8 | 1–7/8 |
| | 8–3 | 3–1/8 | 2–3/8 |
| 120.0 | 5–0 | 3–1/8 | 1–3/8 |
| | 7–0 | 3–1/8 | 1–7/8 |
| | 8–3 | 3–1/8 | 2–1/4 |
| 130.0 | 5–0 | 3–1/8 | 1–3/8 |
| | 7–0 | 3–1/8 | 1–7/8 |
| | 8–3 | 3–1/8 | 2–1/2 |

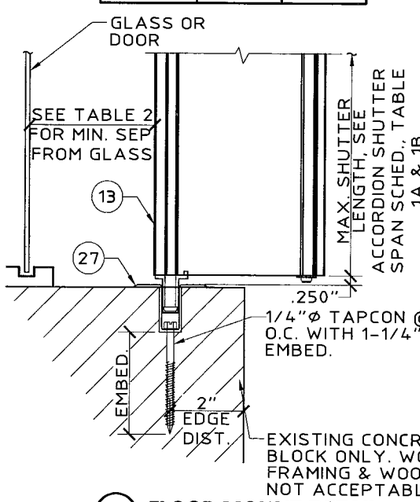


**(M) FLOOR MOUNT DETAIL**
SCALE : 3"= 1'– 0"

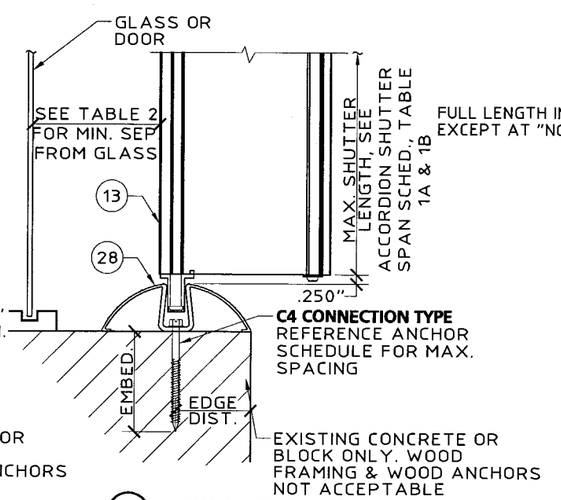


**(N) FLOOR MOUNT DETAIL**
SCALE : 3"= 1'– 0"

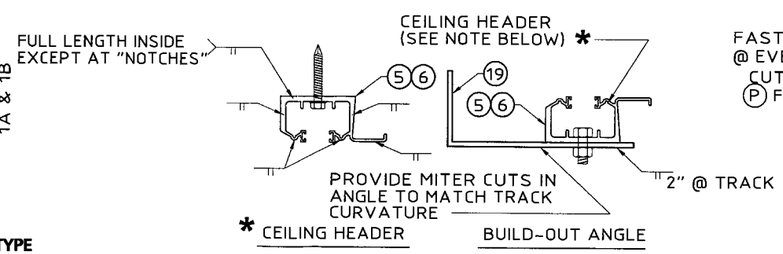


* NOTE: WHEN CEILING HEADER IS USED IN A BOTTOM MOUNTING CONDITION, WELDING LOCATIONS ARE THE SAME.
(USE ER4093 FILLER ALLOY FOR ALL WELDING.)

**(P) WELDING DETAILS**
SCALE : 3"= 1'– 0"

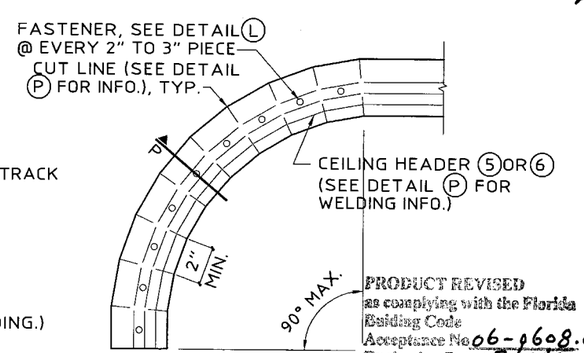


**CURVED TRACK PLAN VIEW**
N.T.S.

PRODUCT REVISED
as complying with the Florida Building Code
Acceptance No. 06-0608.02
Expiration Date 07/11/2008
By Helena A. Melon
Miami Dade Product Control Division


Thornton-Tomasetti Group
330 N. Andrews Ave., Suite 450 • Ft. Lauderdale, FL 33301
Tel. (954) 522-3690 • Fax (954) 522-3691 • COA # 7319
Website: www.TheTTGroup.com



Copyright © 2006 Thornton-Tomasetti Group, Inc.
6.8 & HR SYSTEMS LICENSED BY SOUTHERN SHUTTER ASSOCIATION


6.8 – HR ACCORDION SHUTTER

1001 EAST 24TH STREET
HIALEAH, FLORIDA 33013
TEL(305) 693-0017 • FAX(305) 693-4939

NEW F&P ALUMINUM SCREEN, INC.

J.W. Knezevich
Professional Engineer
FL License No.: PE 0041961

MAY 01 2006

revisions

| no | date | by | description |
|---|---|---|---|
| 0 | 06/30/05 | NW | PREVIOUSLY DRAWING I.D. 03-253 |
| 1 | 12/16/05 | VJK | NEW COMPONENTS |

SSA I.D. # 060501053 76D

date 06/30/2005
scale AS NOTED
drawn by MCR
design by JWK
checked by JWK
drawing no. 06-388
sheet 7 of 13


Print Information: P:\FL1\KA\CADD\Associations\SSA\F_and_P\06-388\R1-sub\06-388-07.dwg AVazquez 05/01/2006 02:00:16pm 05/01/06 13:30

# 6.8 ACCORDION SHUTTER

**NOT APPLICABLE TO HR ACCORDION SHUTTER**

## ANCHOR SCHEDULE

**FASTENER MAXIMUM SPACING (INCHES) REQUIRED FOR VARIOUS DESIGN LOADS AND SPANS**

| EXIST. STRUC. | ANCHOR TYPE | LOAD (W) P.S.F. MAX. (SEE NOTE 1) | MIN. 2" EDGE DISTANCE | | | | | | | | | | | | | | | MIN. 3" EDGE DISTANCE | | | | | | | | | | | | | |
|---|---|---|---|---|---|---|---|---|---|---|---|---|---|---|---|---|---|---|---|---|---|---|---|---|---|---|---|---|---|---|---|
| | | | SPANS UP TO 6'-0" (SEE NOTE 1) | | | | | SPANS UP TO 8'-8" (SEE NOTE 1) | | | | | SPANS UP TO 12'-9" (SEE NOTE 1) | | | | | SPANS UP TO 6'-0" (SEE NOTE 1) | | | | | SPANS UP TO 8'-8" (SEE NOTE 1) | | | | | SPANS UP TO 12'-9" (SEE NOTE 1) | | | | |
| | | | CONNECTION TYPE (SEE NOTE 3) | | | | | CONNECTION TYPE (SEE NOTE 3) | | | | | CONNECTION TYPE (SEE NOTE 3) | | | | | CONNECTION TYPE (SEE NOTE 3) | | | | | CONNECTION TYPE (SEE NOTE 3) | | | | | CONNECTION TYPE (SEE NOTE 3) | | | | |
| | | | C1 | C2 | C3 | C4 | C5 | C1 | C2 | C3 | C4 | C5 | C1 | C2 | C3 | C4 | C5 | C1 | C2 | C3 | C4 | C5 | C1 | C2 | C3 | C4 | C5 | C1 | C2 | C3 | C4 | C5 |
| CONCRETE | 1/4"Ø ELCO TEXTRON TAPCON WITH 1-3/4" MIN. EMBED. | 48.0 | 12 | 12 | 12 | 12 | 10 | 12 | 12 | 9 | 10 | 7 | 12 | 12 | 6 | 7 | 4 | 12 | 12 | 12 | 12 | 12 | 12 | 12 | 11 | 12 | 9 | 12 | 12 | 8 | 8 | 6 |
| | | 62.0 | 12 | 12 | 10 | 11 | 8 | 12 | 12 | 7 | 8 | 5 | 11 | 7 | 5 | 5 | 3 | 12 | 12 | 12 | 12 | 10 | 12 | 12 | 9 | 10 | 7 | 12 | 9 | 6 | 6 | 4 |
| | | 72.0 | 12 | 12 | 9 | 9 | 7 | 12 | 12 | 6 | 6 | 4 | 10 | 4 | 4 | 4 | 3 | 12 | 12 | 11 | 12 | 8 | 12 | 12 | 7 | 8 | 6 | 12 | 6 | 5 | 5 | 4 |
| | | 110.0 | 12 | 12 | 6 | 6 | 4 | 9 | 4 | 4 | 4 | 3 | 8 | 3 | 3 | 3 | | 12 | 12 | 7 | 8 | 5 | 12 | 5 | 5 | 5 | 4 | 10 | 4 | 4 | 4 | 3 |
| | (MIN. 3,320 P.S.I. CONCRETE) | 200.0 | 8 | 3 | 3 | 3 | | 8 | 3 | 3 | 3 | | 8 | 3 | 3 | 3 | | 10 | 4 | 4 | 4 | 3 | 10 | 4 | 4 | 4 | 3 | 10 | 4 | 4 | 4 | 3 |
| | 3/8"Ø POWERS DROP -IN & 3/8-16 STAINLESS STEEL BOLT WITH 1-9/16" MIN. EMBEDMENT | 48.0 | | | | | | | | | | | | | | | | 12 | 12 | 12 | 12 | 12 | 12 | 12 | 12 | 12 | 11 | 12 | 12 | 10 | 11 | 7 |
| | | 62.0 | | | | | | | | | | | | | | | | 12 | 12 | 12 | 12 | 12 | 12 | 12 | 11 | 12 | 9 | 12 | 11 | 7 | 8 | 6 |
| | | 72.0 | | | | | | | | | | | | | | | | 12 | 12 | 12 | 12 | 11 | 12 | 12 | 10 | 10 | 7 | 12 | 8 | 6 | 7 | 5 |
| | | 110.0 | | | | | | | | | | | | | | | | 12 | 12 | 9 | 10 | 7 | 12 | 7 | 6 | 7 | 5 | 12 | 5 | 5 | 6 | 4 |
| | (MIN. 3,000 P.S.I. CONCRETE) | 200.0 | | | | | | | | | | | | | | | | 12 | 5 | 5 | 6 | 4 | 12 | 5 | 5 | 6 | 4 | 12 | 5 | 5 | 6 | 4 |
| | * 1/4"Ø ALL-POINTS SOLID- SET ANCHOR WITH 7/8" EMBEDMENT & 1/4-20 STAINLESS STEEL MACHINE SCREW | 48.0 | 12 | 12 | 12 | 12 | 11 | 12 | 12 | 10 | 11 | 8 | 12 | 12 | 7 | 7 | 5 | 12 | 12 | 12 | 12 | 12 | 12 | 12 | 12 | 12 | 10 | 12 | 12 | 9 | 10 | 7 |
| | | 62.0 | 12 | 12 | 11 | 12 | 9 | 12 | 12 | 8 | 8 | 6 | 12 | 8 | 5 | 6 | 4 | 12 | 12 | 12 | 12 | 11 | 12 | 12 | 10 | 11 | 8 | 12 | 10 | 7 | 7 | 5 |
| | | 72.0 | 12 | 12 | 10 | 11 | 7 | 12 | 12 | 7 | 7 | 5 | 11 | 5 | 4 | 5 | 3 | 12 | 12 | 12 | 12 | 10 | 12 | 12 | 9 | 9 | 7 | 12 | 6 | 6 | 6 | 4 |
| | | 110.0 | 12 | 12 | 6 | 7 | 5 | 10 | 5 | 4 | 5 | 3 | 9 | 3 | 3 | 4 | 3 | 12 | 12 | 8 | 9 | 6 | 12 | 6 | 6 | 6 | 4 | 11 | 4 | 5 | 5 | 3 |
| | (MIN. 3,000 P.S.I. CONCRETE) | 200.0 | 9 | 3 | 3 | 4 | 3 | 9 | 3 | 3 | 4 | 3 | 9 | 3 | 3 | 4 | 3 | 11 | 4 | 5 | 5 | 3 | 11 | 4 | 5 | 5 | 3 | 11 | 4 | 5 | 5 | 3 |
| | 1/4"Ø ELCO CRETE FLEX WITH 1-3/4" MIN. EMBEDMENT | 48.0 | 12 | 12 | 12 | 12 | 12 | 12 | 12 | 12 | 12 | 10 | 12 | 12 | 9 | 9 | 7 | 12 | 12 | 12 | 12 | 12 | 12 | 12 | 12 | 12 | 12 | 12 | 12 | 10 | 11 | 8 |
| | | 62.0 | 12 | 12 | 12 | 12 | 11 | 12 | 12 | 10 | 11 | 8 | 12 | 10 | 7 | 7 | 5 | 12 | 12 | 12 | 12 | 12 | 12 | 12 | 12 | 12 | 9 | 12 | 11 | 8 | 8 | 6 |
| | | 72.0 | 12 | 12 | 12 | 12 | 10 | 12 | 12 | 8 | 9 | 6 | 12 | 7 | 6 | 6 | 4 | 12 | 12 | 12 | 12 | 11 | 12 | 12 | 10 | 11 | 8 | 12 | 7 | 7 | 7 | 5 |
| | | 110.0 | 12 | 12 | 8 | 9 | 6 | 12 | 6 | 5 | 6 | 4 | 11 | 4 | 5 | 5 | 3 | 12 | 12 | 9 | 10 | 7 | 12 | 7 | 6 | 7 | 5 | 12 | 5 | 5 | 6 | 4 |
| | (MIN. 3,350 P.S.I. CONCRETE) | 200.0 | 11 | 4 | 5 | 5 | 3 | 11 | 4 | 5 | 5 | 3 | 11 | 4 | 5 | 5 | 3 | 12 | 5 | 5 | 6 | 4 | 12 | 5 | 5 | 6 | 4 | 12 | 5 | 5 | 6 | 4 |
| | 5/16"Ø ITW XL TAPCON WITH 1-1/4" MIN. EMBEDMENT | 48.0 | 12 | 12 | 12 | 12 | 12 | 12 | 12 | 12 | 12 | 11 | 12 | 12 | 10 | 10 | 8 | 12 | 12 | 12 | 12 | 12 | 12 | 12 | 12 | 12 | 12 | 12 | 12 | 12 | 12 | 10 |
| | | 62.0 | 12 | 12 | 12 | 12 | 12 | 12 | 12 | 11 | 12 | 9 | 12 | 12 | 7 | 8 | 6 | 12 | 12 | 12 | 12 | 12 | 12 | 12 | 12 | 12 | 12 | 12 | 12 | 10 | 11 | 8 |
| | | 72.0 | 12 | 12 | 12 | 12 | 11 | 12 | 12 | 9 | 10 | 7 | 12 | 9 | 6 | 7 | 5 | 12 | 12 | 12 | 12 | 12 | 12 | 12 | 12 | 12 | 10 | 12 | 10 | 9 | 9 | 7 |
| | | 110.0 | 12 | 12 | 9 | 10 | 7 | 12 | 8 | 6 | 6 | 5 | 12 | 6 | 5 | 5 | 4 | 12 | 12 | 12 | 12 | 10 | 12 | 10 | 8 | 9 | 6 | 12 | 7 | 7 | 8 | 5 |
| | (MIN. 2,900 P.S.I. CONCRETE) | 200.0 | 12 | 6 | 5 | 5 | 4 | 12 | 6 | 5 | 5 | 4 | 12 | 6 | 5 | 5 | 4 | 12 | 7 | 7 | 8 | 5 | 12 | 7 | 7 | 8 | 5 | 12 | 7 | 7 | 8 | 5 |
| HOLLOW CONCRETE BLOCK | 1/4"Ø ELCO TEXTRON TAPCON WITH 1-1/4" MIN. EMBED. | 48.0 | 12 | 12 | 7 | 8 | 5 | 10 | 10 | 5 | 5 | 3 | 6 | 6 | 3 | 4 | | 12 | 12 | 9 | 10 | 7 | 12 | 12 | 6 | 7 | 4 | 8 | 8 | 4 | 5 | 3 |
| | | 62.0 | 11 | 11 | 6 | 6 | 4 | 7 | 7 | 4 | 4 | 3 | 5 | 3 | | 3 | | 12 | 12 | 7 | 8 | 5 | 9 | 9 | 5 | 5 | 3 | 6 | 4 | 3 | 3 | |
| | | 72.0 | 9 | 9 | 5 | 5 | 3 | 6 | 6 | 3 | 3 | | 4 | | | | | 12 | 12 | 6 | 7 | 4 | 8 | 8 | 4 | 4 | 3 | 5 | | 3 | 3 | |
| | | 110.0 | 6 | 6 | 3 | 3 | | 4 | | | | | 3 | | | | | 7 | 7 | 4 | 4 | 3 | 5 | | | 3 | | 4 | | | | |
| | | 200.0 | 3 | | | | | 3 | | | | | 3 | | | | | 4 | | | | | 4 | | | | | 4 | | | | |
| | * 1/4"Ø ALL-POINTS SOLID- SET ANCHOR WITH 7/8" EMBEDMENT & 1/4-20 STAINLESS STEEL MACHINE SCREW | 48.0 | 12 | 12 | 10 | 11 | 8 | 12 | 12 | 7 | 8 | 6 | 12 | 12 | 5 | 5 | 4 | 12 | 12 | 12 | 12 | 10 | 12 | 12 | 9 | 10 | 7 | 12 | 12 | 6 | 7 | 5 |
| | | 62.0 | 12 | 12 | 8 | 8 | 6 | 12 | 12 | 5 | 6 | 4 | 10 | 6 | 3 | 4 | 3 | 12 | 12 | 11 | 11 | 8 | 12 | 12 | 7 | 8 | 5 | 11 | 7 | 5 | 5 | 3 |
| | | 72.0 | 12 | 12 | 7 | 7 | 5 | 12 | 12 | 5 | 5 | 4 | 9 | 4 | 3 | 3 | | 12 | 12 | 9 | 10 | 7 | 12 | 12 | 6 | 7 | 5 | 10 | 4 | 4 | 4 | 3 |
| | | 110.0 | 12 | 12 | 4 | 5 | 3 | 9 | 4 | 3 | 3 | | 7 | 3 | | | | 12 | 12 | 6 | 6 | 4 | 9 | 4 | 4 | 4 | 3 | 8 | 3 | 3 | 3 | |
| | | 200.0 | 7 | 3 | | | | 7 | 3 | | | | 7 | 3 | | | | 8 | 3 | 3 | 3 | | 8 | 3 | 3 | 3 | | 8 | 3 | 3 | 3 | |

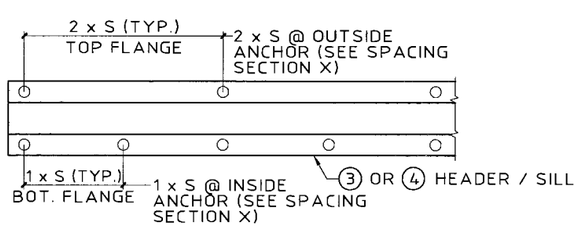


NOTE: "S" INDICATES ANCHOR SCHEDULE SPACING.

**SPACING DIAGRAM FOR C1 CONNECTION TYPE:**

- C1 CONNECTION TYPE USING PIECE ③ OR ④
- APPLICABLE TO 6.8 SYSTEM ONLY

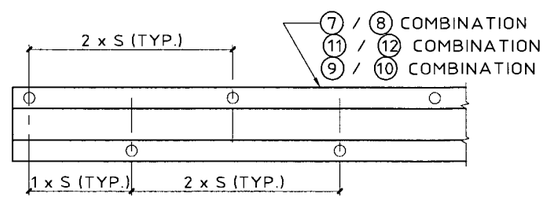


NOTE: "S" INDICATES ANCHOR SCHEDULE SPACING.

**SPACING DIAGRAM FOR C3 & C4 CONNECTION TYPE:**

- C3 CONNECTION TYPE USING PIECE ⑩ WITH OUTSIDE ANCHORS ONLY
- C4 CONNECTION TYPE USING PIECE ⑧ OR ⑫ WITH OUTSIDE ANCHORS ONLY
- APPLICABLE TO 6.8 SYSTEM ONLY

## ANCHOR SCHEDULE

**FASTENER MAXIMUM SPACING (INCHES) REQUIRED FOR VARIOUS DESIGN LOADS AND SPANS**

| EXIST. STRUC. | ANCHOR TYPE | LOAD (W) P.S.F. MAX. (SEE NOTE 1) | MIN. 3/4" EDGE DISTANCE | | | | | | | | | | | | | | |
|---|---|---|---|---|---|---|---|---|---|---|---|---|---|---|---|---|---|
| | | | SPANS UP TO 6'-0" (SEE NOTE 1) | | | | | SPANS UP TO 8'-8" (SEE NOTE 1) | | | | | SPANS UP TO 12'-9" (SEE NOTE 1) | | | | |
| | | | CONNECTION TYPE (SEE NOTE 3) | | | | | CONNECTION TYPE (SEE NOTE 3) | | | | | CONNECTION TYPE (SEE NOTE 3) | | | | |
| | | | C1 | C2 | C3 | C4 | C5 | C1 | C2 | C3 | C4 | C5 | C1 | C2 | C3 | C4 | C5 |
| WOOD | 2" MIN. 1/4"Ø x MIN. 3" LONG LAG SCREW WITH MIN. 2" EMBED. SHEAR PARALLEL OR PERP. TO WOOD GRAIN | 48.0 | 12 | 12 | 10 | 11 | 9 | 12 | 12 | 7 | 7 | 6 | 12 | 12 | 5 | 5 | 4 |
| | | 62.0 | 12 | 12 | 8 | 8 | 7 | 12 | 12 | 5 | 5 | 5 | 12 | 12 | 3 | 4 | 3 |
| | | 72.0 | 12 | 12 | 7 | 7 | 6 | 12 | 12 | 4 | 5 | 4 | 12 | 9 | 3 | 3 | |
| | | 110.0 | 12 | 12 | 4 | 4 | 4 | 12 | 8 | 3 | 3 | | 12 | 6 | | | |
| | | 200.0 | 12 | 6 | | | | 12 | 6 | | | | 12 | 6 | | | |
| | * 7/16"Ø WOOD BUSHING WITH 5/8" MIN. EMBED. & 1/4-20 STAINLESS STEEL MACHINE SCREW | 48.0 | 12 | 12 | | | | 11 | 11 | | | | 7 | 7 | | | |
| | | 62.0 | 12 | 12 | | | | 9 | 9 | | | | 6 | 3 | | | |
| | | 72.0 | 11 | 11 | | | | 7 | 7 | | | | 5 | | | | |
| | | 110.0 | 7 | 7 | | | | 5 | | | | | 4 | | | | |
| | | 200.0 | 4 | | | | | 4 | | | | | 4 | | | | |

## ANCHOR SCHEDULE

**FASTENER MAXIMUM SPACING (INCHES) REQUIRED FOR VARIOUS DESIGN LOADS AND SPANS**

| EXIST. STRUC. | ANCHOR TYPE | LOAD (W) P.S.F. MAX. (SEE NOTE 1) | MIN. 2-1/2" EDGE DISTANCE | | | | | | | | | | | | | | |
|---|---|---|---|---|---|---|---|---|---|---|---|---|---|---|---|---|---|
| | | | SPANS UP TO 6'-0" (SEE NOTE 1) | | | | | SPANS UP TO 8'-8" (SEE NOTE 1) | | | | | SPANS UP TO 12'-9" (SEE NOTE 1) | | | | |
| | | | CONNECTION TYPE (SEE NOTE 3) | | | | | CONNECTION TYPE (SEE NOTE 3) | | | | | CONNECTION TYPE (SEE NOTE 3) | | | | |
| | | | C1 | C2 | C3 | C4 | C5 | C1 | C2 | C3 | C4 | C5 | C1 | C2 | C3 | C4 | C5 |
| CONCRETE | 1/4"Ø ITW TAPCON WITH 1-3/4" MIN. EMBEDMENT | 48.0 | 12 | 12 | 12 | 12 | 12 | 12 | 12 | 11 | 12 | 9 | 12 | 12 | 7 | 8 | 6 |
| | | 62.0 | 12 | 12 | 12 | 12 | 10 | 12 | 12 | 9 | 9 | 7 | 12 | 10 | 6 | 6 | 4 |
| | | 72.0 | 12 | 12 | 11 | 12 | 9 | 12 | 12 | 7 | 8 | 6 | 12 | 7 | 5 | 5 | 4 |
| | | 110.0 | 12 | 12 | 7 | 7 | 5 | 12 | 6 | 5 | 5 | 4 | 12 | 4 | 4 | 4 | 3 |
| | (MIN. 3,192 P.S.I. CONCRETE) | 200.0 | 12 | 4 | 4 | 4 | 3 | 12 | 4 | 4 | 4 | 3 | 12 | 4 | 4 | 4 | 3 |
| HOLLOW CONCRETE BLOCK | 1/4"Ø ITW TAPCON WITH 1-1/4" MIN. EMBEDMENT | 48.0 | 12 | 12 | 7 | 8 | 5 | 11 | 11 | 5 | 6 | 4 | 7 | 7 | 3 | 4 | |
| | | 62.0 | 12 | 12 | 6 | 6 | 4 | 8 | 8 | 4 | 4 | 3 | 5 | 3 | | 3 | |
| | | 72.0 | 10 | 10 | 5 | 5 | 3 | 7 | 7 | 3 | 4 | | 5 | | | | |
| | | 110.0 | 7 | 7 | 3 | 3 | | 4 | | | | | 4 | | | | |
| | | 200.0 | 4 | | | | | 4 | | | | | 4 | | | | |

## ANCHOR SCHEDULE

**FASTENER MAXIMUM SPACING (INCHES) REQUIRED FOR VARIOUS DESIGN LOADS AND SPANS**

| EXIST. STRUC. | ANCHOR TYPE | LOAD (W) P.S.F. MAX. (SEE NOTE 1) | MIN. 4" EDGE DISTANCE | | | | | | | | | | | | | | |
|---|---|---|---|---|---|---|---|---|---|---|---|---|---|---|---|---|---|
| | | | SPANS UP TO 6'-0" (SEE NOTE 1) | | | | | SPANS UP TO 8'-8" (SEE NOTE 1) | | | | | SPANS UP TO 12'-9" (SEE NOTE 1) | | | | |
| | | | CONNECTION TYPE (SEE NOTE 3) | | | | | CONNECTION TYPE (SEE NOTE 3) | | | | | CONNECTION TYPE (SEE NOTE 3) | | | | |
| | | | C1 | C2 | C3 | C4 | C5 | C1 | C2 | C3 | C4 | C5 | C1 | C2 | C3 | C4 | C5 |
| HOLLOW CONCRETE BLOCK | 5/16"Ø ITW XL TAPCON WITH 1-1/4" MIN. EMBEDMENT | 48.0 | 12 | 12 | 12 | 12 | 8 | 12 | 12 | 8 | 9 | 6 | 10 | 10 | 5 | 6 | 4 |
| | | 62.0 | 12 | 12 | 9 | 10 | 6 | 11 | 11 | 6 | 7 | 4 | 7 | 4 | 4 | 4 | 3 |
| | | 72.0 | 12 | 12 | 8 | 9 | 5 | 10 | 10 | 5 | 6 | 4 | 6 | 3 | 3 | 4 | |
| | | 110.0 | 9 | 9 | 5 | 5 | 3 | 6 | 3 | 3 | 4 | | 5 | | 3 | 3 | |
| | | 200.0 | 5 | | 3 | 3 | | 5 | | 3 | 3 | | 5 | | 3 | 3 | |

**ANCHOR NOTES:**

1. **SPANS AND LOADS SHOWN HERE ARE FOR DETERMINING ANCHOR SPACING ONLY. ALLOWABLE STORM SHUTTER SPANS FOR SPECIFIC LOADS MUST BE LIMITED TO THOSE SHOWN IN TABLE 1A & 1B.**
2. REFERENCE SHEET 13 FOR NOTES 2 THRU 10.

PRODUCT REVIEWED as complying with the Florida Building Code
Acceptance No. 06-0608.02
Expiration Date 07/11/2008
By [signature]
Miami Dade Product Control Division


Thornton-Tomasetti Group
330 N. Andrews Ave., Suite 450 • Ft. Lauderdale, FL 33301
Tel. (954) 522-3690 • Fax (954) 522-3691 • COA # 7519
Website: www.TheTTGroup.com



Copyright © 2006 Thornton-Tomasetti Group, Inc.
6.8 & HR SYSTEMS LICENSED BY SOUTHERN SHUTTER ASSOCIATION


6.8 - HR ACCORDION SHUTTER


NEW F & P ALUMINUM SCREEN, INC.
1001 EAST 24TH STREET
HIALEAH, FLORIDA 33013
TEL(305) 693-0017 • FAX(305) 693-4999


J.W. Kruezevich
Professional Engineer
FL License No.: PE 0041961

MAY 01 2006

revisions

| no | date | by | description |
|---|---|---|---|
| 0 | 06/30/05 | NW | PREVIOUSLY DRAWING NO. 03-258 |
| 1 | 12/16/05 | VJK | NEW COMPONENTS |

SSA I.D. # 060501053760

date 06/30/2005
scale AS NOTED
drawn by MCR
design by JWK
checked by JWK
drawing no. 06-388
sheet 8 of 13


Print Information: P:\FL1\KA\CADD\Associations\SSA\F_and_P\06-388\R1-sub\06-388-08.dwg AVazquez 05/01/2006 01:59:41pm 04/26/06 17:13

# HR ACCORDION SHUTTER

**NOT APPLICABLE TO 6.8 ACCORDION SHUTTER**

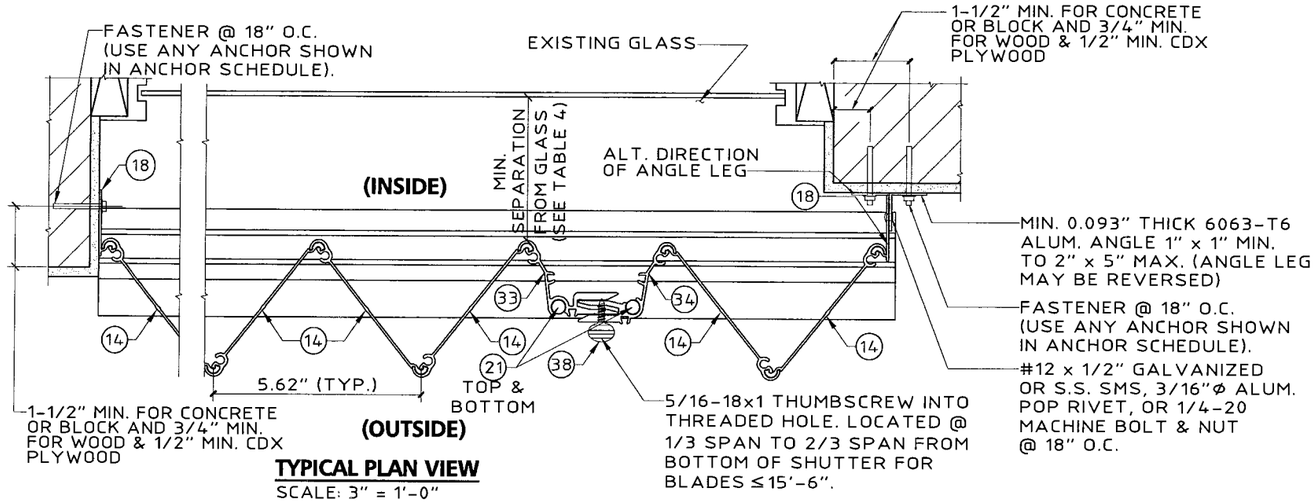


**TYPICAL PLAN VIEW**
SCALE: 3" = 1'-0"

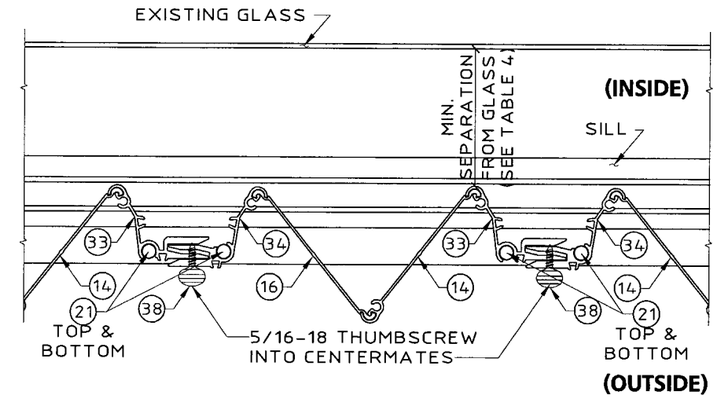


**MULTIPLE SHUTTER ASSEMBLY**
SCALE: 3" = 1'-0"

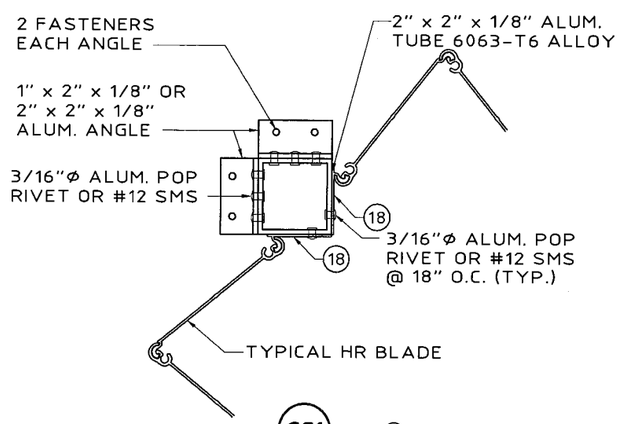


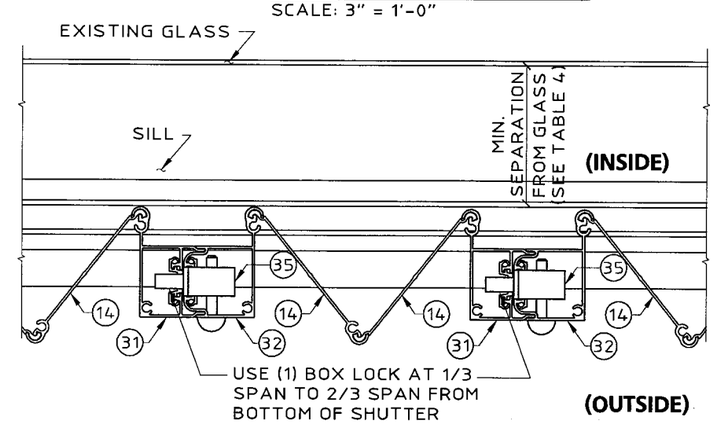


**MULTIPLE SHUTTER ASSEMBLY**
SCALE: 3" = 1'-0"

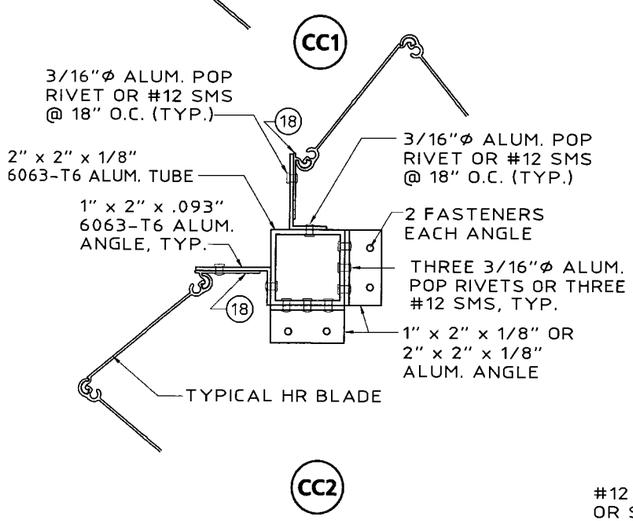


**TYPICAL CORNER CLOSURE DETAILS**
SCALE: 3" = 1'-0"

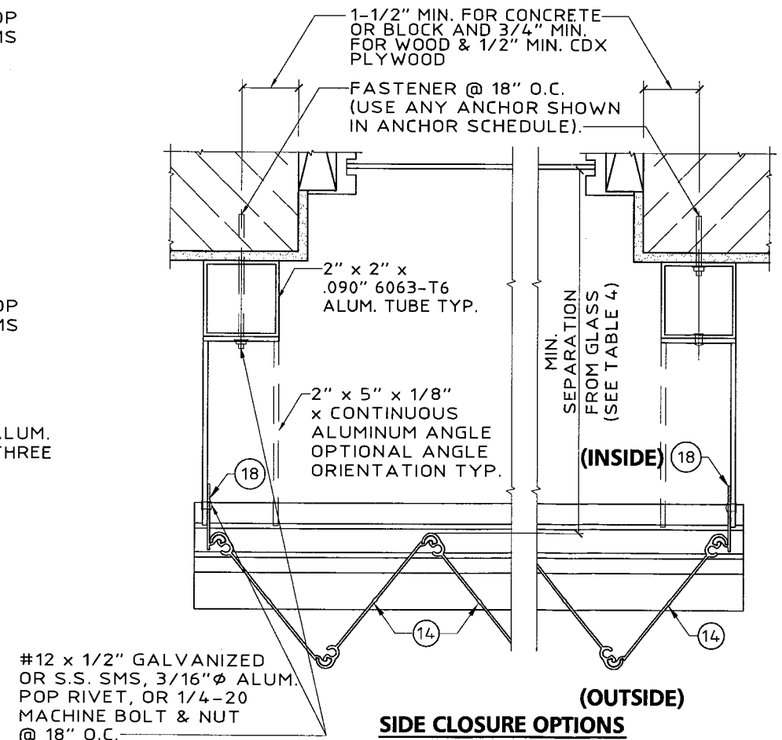


**SIDE CLOSURE OPTIONS**
SCALE: 3" = 1'-0"

PRODUCT REVISED
as complying with the Florida
Building Code
Acceptance No. 06-0608.02
Expiration Date 07/11/2008
By Helmy A Abdel
Miami Dade Product Control
Division


Thornton-Tomasetti Group
330 N. Andrews Ave., Suite 450 • Ft. Lauderdale, FL 33301
Tel. (954) 522-3690 • Fax (954) 522-3691 • COA # 7519
Website: www.TheTTGroup.com



Copyright © 2006 Thornton-Tomasetti Group, Inc.
6.8 & HR SYSTEMS LICENSED BY SOUTHERN SHUTTER ASSOCIATION


6.8 - HR
ACCORDION SHUTTER


1001 EAST 24TH STREET
HIALEAH, FLORIDA 33013
TEL(305) 693-0017 • FAX(305) 693-4939
NEW F & P ALUMINUM SCREEN, INC.


J.W. Knezevich
Professional Engineer
FL License No.: HF 0041961

MAY 01 2006

revisions

| no | date | by | description |
|---|---|---|---|
| 0 | 06/30/05 | NW | PREVIOUSLY DRAWING NO. 03-258 |
| 1 | 12/16/05 | VJK | NEW COMPONENTS |

SSA I.D. # 0605010537 6D

| | |
|---|---|
| date | 06/30/2005 |
| scale | AS NOTED |
| drawn by | MCR |
| design by | JWK |
| checked by | JWK |
| drawing no. | 06-388 |




Print Information: P:\FL1\KA\CADD\Associations\SSA\F_and_P\06-388\R1-sub\06-388-09.dwg AVazquez 05/01/2006 01:59:07pm 05/01/06 13:32

# HR ACCORDION SHUTTER

**NOT APPLICABLE TO 6.8 ACCORDION SHUTTER**

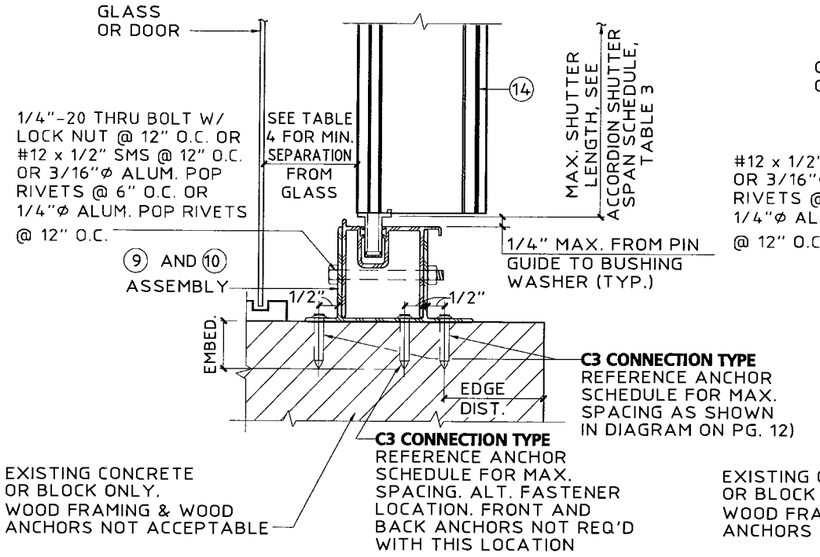


**Q INSIDE MOUNT SECTION**
SCALE : 3"= 1'- 0"

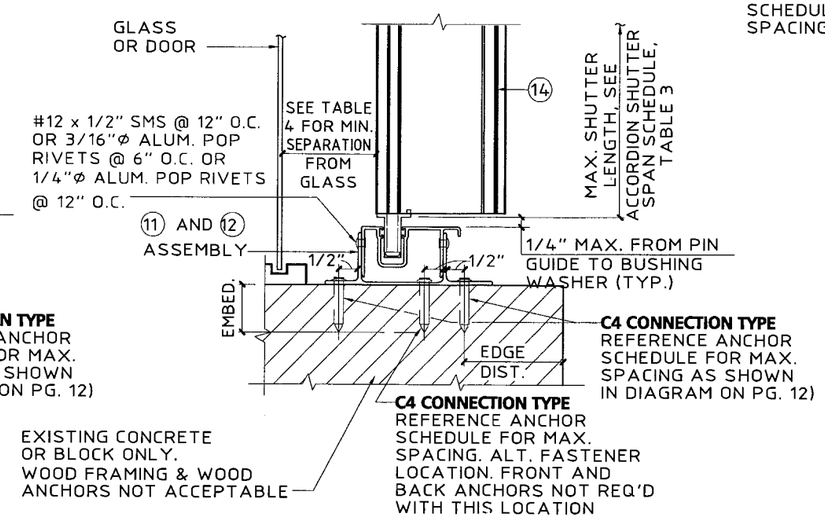


**R INSIDE MOUNT SECTION**
SCALE : 3"= 1'- 0"

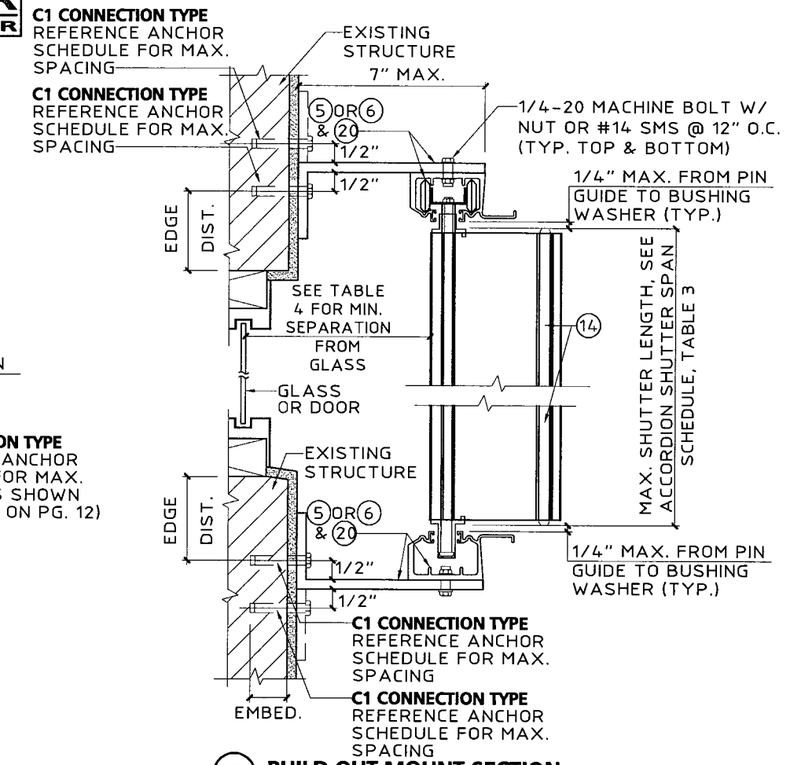


**S BUILD OUT MOUNT SECTION**
SCALE : 3"= 1'- 0"

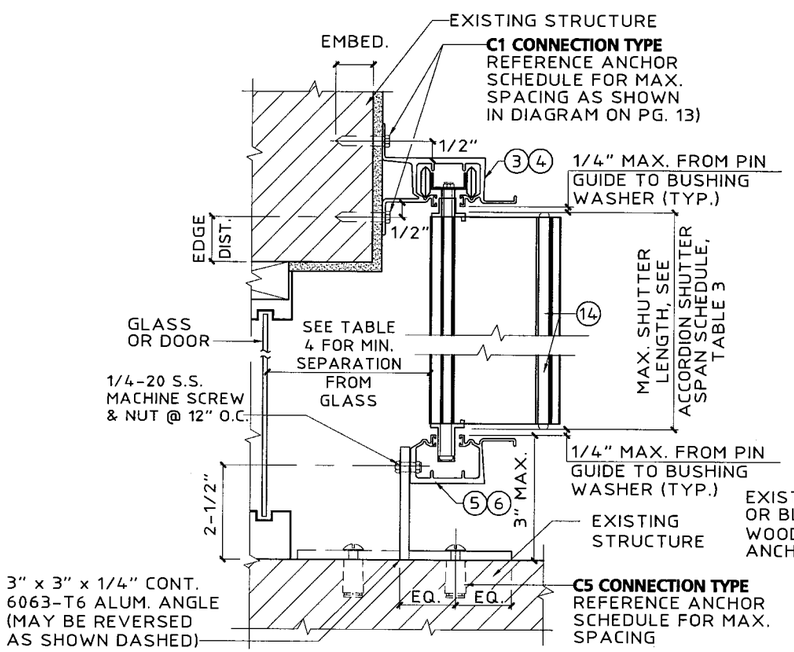


**T WALL MOUNT SECTION**
SCALE : 3"= 1'- 0"

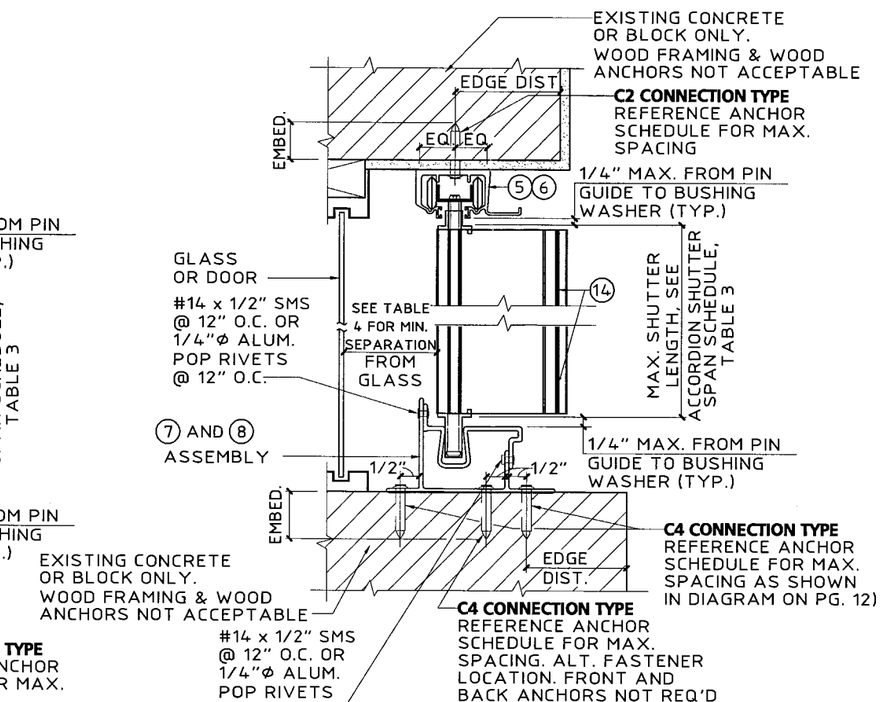


**U CEILING / INSIDE MOUNT SECTION**
SCALE : 3"= 1'- 0"

PRODUCT REVISED
as complying with the Florida
Building Code
Acceptance No. 06-0608.02
Expiration Date 07/11/2008
By Miami Dade Product Control
Division


Thornton-Tomasetti Group
330 N. Andrews Ave., Suite 450 • Ft. Lauderdale, FL 33301
Tel. (954) 522-3690 • Fax (954) 522-3691 • COA # 7519
Website: www.TheTTGroup.com



Copyright © 2006 Thornton-Tomasetti Group, Inc.
6.8 & HR SYSTEMS LICENSED BY SOUTHERN SHUTTER ASSOCIATION


6.8 - HR
ACCORDION SHUTTER

NEW
F & P ALUMINUM SCREEN, INC.
1001 EAST 24TH STREET
HIALEAH, FLORIDA 33013
TEL(305) 693-0017 • FAX(305) 693-4939

J.W. Knezevich
Professional Engineer
FL License No.: PE 0041961

MAY 01 2006

revisions

| no | date | by | description |
|---|---|---|---|
| 0 | 06/30/05 | NW | PREVIOUSLY DRAWING NO. 03-258 |
| 1 | 12/16/05 | VJK | NEW COMPONENTS |

SSA I.D. # 060501053 76D

date 06/30/2005
scale AS NOTED
drawn by MCR
design by JWK
checked by JWK
drawing no. 06-388
sheet 10 of 13


Print Information: P:\FL1\KA\CADD\Associations\SSA\F_and_P\06-388\R1-sub\06-388-10.dwg AVazquez 05/01/2006 01:56:02pm 05/01/'06 13:54

# HR ACCORDION SHUTTER

**NOT APPLICABLE TO 6.8 ACCORDION SHUTTER**

**TABLE 3 — ACCORDION SHUTTER SPAN SCHEDULE FOR ALL MOUNTING CONDITIONS**

| DESIGN WIND LOAD W (P.S.F.) | POSITIVE WIND LOAD | NEGATIVE WIND LOAD |
|---|---|---|
| | L max. (FT-IN) | L max. (FT-IN) |
| 32.5 | 15-2 | 15-6 |
| 40.0 | 14-4 | 15-6 |
| 50.0 | 13-6 | 15-6 |
| 60.0 | 12-10 | 15-6 |
| 70.0 | 12-4 | 15-6 |
| 80.0 | 11-10 | 15-2 |
| 90.0 | 11-5 | 14-3 |
| 100.0 | 11-1 | 13-7 |
| 110.0 | 10-9 | 12-8 |
| 120.0 | 10-5 | 11-7 |
| 150.0 | 9-8 | 10-10 |
| 160.0 | 9-6 | 10-2 |
| 170.0 | 9-3 | 9-6 |
| 179.1 | 9-1 | 9-1 |
| 186.4 | 9-0 | 9-0 |
| 190.0 | 8-9 | 8-9 |
| 200.0 | 8-4 | 8-4 |
| 210.0 | 7-11 | 7-11 |
| 220.0 | 7-7 | 7-7 |
| 230.0 | 7-3 | 7-3 |

**TABLE 3 NOTES:**

1. DETERMINE BOTH THE POSITIVE AND THE NEGATIVE WIND LOADS. CHECK THEIR RESPECTIVE SPANS AND USE THE LESSER VALUE OF THE TWO.
2. FOR DESIGN LOADS BETWEEN TABULATED VALUES USE NEXT HIGHER LOAD OR LINEAR INTERPOLATION MAY BE USED TO DETERMINE ALLOWABLE SPANS.

**TABLE 4 NOTE:**

1. ENTER TABLE 4 WITH POSITIVE DESIGN LOAD TO DETERMINE MIN. STORM SHUTTER SEPARATION FROM GLASS.

**TABLE 4 — MINIMUM SHUTTER SEPARATION FROM GLASS**

| POSITIVE DESIGN LOAD (W) (P.S.F.) | ACTUAL SHUTTER SPAN (L) (FT. - IN) | MIN. SEPARATION FROM GLASS FOR INSTALLATIONS LESS THAN OR EQUAL TO 30' ABOVE GRADE (IN.) | MIN. SEPARATION FROM GLASS FOR INSTALLATIONS GREATER THAN 30' ABOVE GRADE (IN.) |
|---|---|---|---|
| 40.0 | 9-0 | 2-1/2 | 1-3/4 |
| | 11-0 | 2-1/2 | 2-1/8 |
| | 14-4 | 3-1/4 | 3-1/4 |
| 50.0 | 9-0 | 2-1/2 | 1-7/8 |
| | 11-0 | 2-1/2 | 2-1/4 |
| | 13-6 | 3-1/4 | 3-1/4 |
| 60.0 | 9-0 | 2-1/2 | 1-7/8 |
| | 11-0 | 2-1/2 | 2-3/8 |
| | 12-11 | 3-1/4 | 3-1/4 |
| 70.0 | 9-0 | 2-1/2 | 2 |
| | 11-0 | 2-1/2 | 2-1/2 |
| | 12-4 | 3-1/4 | 3-1/4 |
| 80.0 | 9-0 | 2-1/2 | 2 |
| | 11-0 | 2-3/4 | 2-3/4 |
| | 11-11 | 3-1/8 | 3-1/8 |
| 90.0 | 9-0 | 2-1/2 | 2 |
| | 11-0 | 2-7/8 | 2-7/8 |
| | 11-5 | 3-1/8 | 3-1/8 |
| 100.0 | 9-0 | 2-1/2 | 2-1/8 |
| | 10-0 | 2-1/2 | 2-1/2 |
| | 11-1 | 3-1/8 | 3-1/8 |
| 110.0 | 9-0 | 2-1/2 | 2-1/4 |
| | 10-0 | 2-5/8 | 2-5/8 |
| | 10-9 | 3 | 3 |
| 120.0 | 9-0 | 2-1/2 | 2-1/4 |
| | 10-0 | 2-3/4 | 2-3/4 |
| | 10-5 | 3 | 3 |
| 130.0 | 9-0 | 2-1/2 | 2-3/8 |
| | 10-0 | 2-7/8 | 2-7/8 |
| | 10-2 | 3 | 3 |

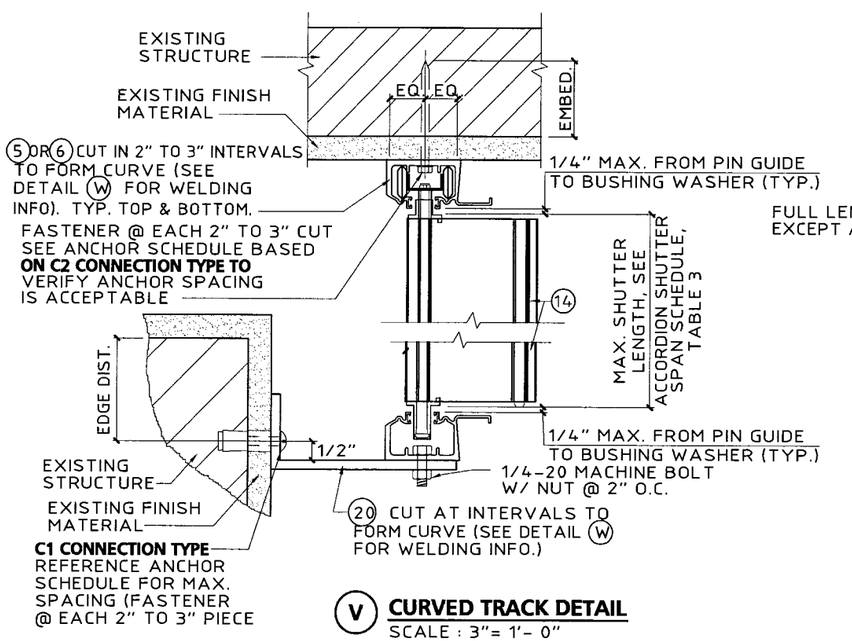


**V CURVED TRACK DETAIL**
SCALE : 3"= 1'- 0"

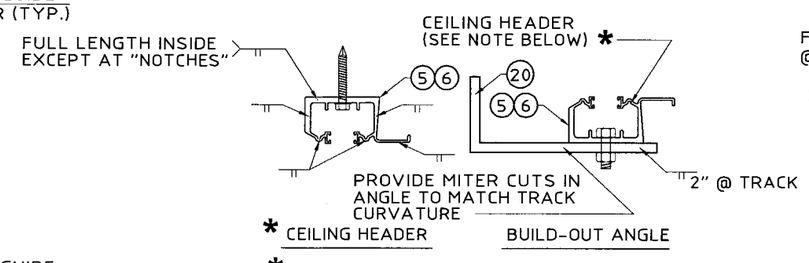


* NOTE: WHEN CEILING HEADER IS USED IN A BOTTOM MOUNTING CONDITION, WELDING LOCATIONS ARE THE SAME.
(USE ER4093 FILLER ALLOY FOR ALL WELDING.)

**W WELDING DETAILS**
SCALE : 3"= 1'- 0"

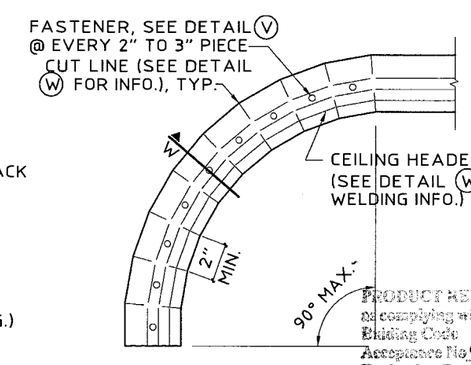


**CURVED TRACK PLAN VIEW**
N.T.S.

PRODUCT REVISED
as complying with the Florida Building Code
Acceptance No. 06-0608.02
Expiration Date 07/11/2008
By Helena A. Melendez
Miami Dade Product Control Division


Thornton-Tomasetti Group
330 N. Andrews Ave., Suite 450 • Ft. Lauderdale, FL 33301
Tel. (954) 522-3690 • Fax (954) 522-3691 • COA # 7519
Website: www.TheTTGroup.com



Copyright © 2006 Thornton-Tomasetti Group, Inc.
6.8 & HR SYSTEMS LICENSED BY SOUTHERN SHUTTER ASSOCIATION


6.8 - HR ACCORDION SHUTTER


1001 EAST 24TH STREET
HIALEAH, FLORIDA 33013
TEL(305) 693-0017 • FAX(305) 693-4939
NEW F & P ALUMINUM SCREEN, INC.


J.W. Knezevich
Professional Engineer
FL License No.: PE 0041961

MAY 01 2006

| revisions | | | |
|---|---|---|---|
| no | date | by | description |
| 0 | 06/30/05 | NW | PREVIOUSLY DRAWING NO. 03-258 |
| 1 | 12/16/05 | VJK | NEW COMPONENTS |

SSA I.D. # 060501053376D

date 06/30/2005
scale AS NOTED
drawn by MCR
design by JWK
checked by JWK
drawing no. 06-388
sheet 11 of 13


Print Information: P:\FL1\KA\CADD\Associations\SSA\F_and_P\06-388\R1-sub\06-388-11.dwg AVazquez 05/01/2006 01:54:08pm 05/01/06 13:34

Print Information: P:\FL1\KA\CADD\Associations\SSA\F_and_P\06-388\R1-sub\06-388-12.dwg AVazquez 05/01/2006 01:53:21pm 05/01/06 13:35

# HR ACCORDION SHUTTER

**NOT APPLICABLE TO 6.8 ACCORDION SHUTTER**

## ANCHOR SCHEDULE

**FASTENER MAXIMUM SPACING (INCHES) REQUIRED FOR VARIOUS DESIGN LOADS AND SPANS**

### MIN. 2" EDGE DISTANCE

| EXIST. STRUC. | ANCHOR TYPE | LOAD (W) P.S.F. MAX. (SEE NOTE 1) | SPANS UP TO 6'-0" (SEE NOTE 1) CONNECTION TYPE (SEE NOTE 3) | | | | | SPANS UP TO 8'-8" (SEE NOTE 1) CONNECTION TYPE (SEE NOTE 3) | | | | | SPANS UP TO 10'-2" (SEE NOTE 1) CONNECTION TYPE (SEE NOTE 3) | | | | | SPANS UP TO 15'-6" (SEE NOTE 1) CONNECTION TYPE (SEE NOTE 3) | | | | |
|---|---|---|---|---|---|---|---|---|---|---|---|---|---|---|---|---|---|---|---|---|---|---|
| | | | C1 | C2 | C3 | C4 | C5 | C1 | C2 | C3 | C4 | C5 | C1 | C2 | C3 | C4 | C5 | C1 | C2 | C3 | C4 | C5 |
| CONCRETE | 1/4"ø ELCO TEXTRON TAPCON WITH 1-3/4" MIN. EMBED. (MIN. 3,320 P.S.I. CONCRETE) | 75.0 | 12 | 9 | 8 | 10 | 6 | 12 | 6 | 6 | 7 | 4 | 12 | 5 | 5 | 6 | 4 | 7 | 3 | 3 | 4 | |
| | | 90.0 | 12 | 7 | 7 | 8 | 5 | 11 | 5 | 5 | 6 | 3 | 10 | 4 | 4 | 5 | 3 | 6 | 3 | | 3 | |
| | | 140.0 | 11 | 5 | 4 | 5 | 3 | 7 | 3 | 3 | 3 | | 6 | 3 | | 3 | | 5 | | | | |
| | | 180.0 | 8 | 3 | 3 | 4 | | 5 | | | 3 | | 5 | | | | | 5 | | | | |
| | | 230.0 | 6 | 3 | | 3 | | 5 | | | | | 5 | | | | | 5 | | | | |
| | 3/8"ø POWERS DROP-IN & 3/8-16 STAINLESS STEEL BOLT WITH 1-9/16" MIN. EMBEDMENT (MIN. 3,000 P.S.I. CONCRETE) | 75.0 | | | | | | | | | | | | | | | | | | | | |
| | | 90.0 | | | | | | | | | | | | | | | | | | | | |
| | | 140.0 | | | | | | | | | | | | | | | | | | | | |
| | | 180.0 | | | | | | | | | | | | | | | | | | | | |
| | | 230.0 | | | | | | | | | | | | | | | | | | | | |
| | * 1/4"ø ALL-POINTS SOLID-SET ANCHOR WITH 7/8" EMBEDMENT & 1/4-20 STAINLESS STEEL MACHINE SCREW (MIN. 3,000 P.S.I. CONCRETE) | 75.0 | 12 | 10 | 9 | 11 | 7 | 12 | 7 | 6 | 8 | 5 | 12 | 6 | 5 | 6 | 4 | 8 | 4 | 3 | 4 | |
| | | 90.0 | 12 | 8 | 8 | 9 | 6 | 12 | 6 | 5 | 6 | 4 | 11 | 5 | 4 | 5 | 3 | 7 | 3 | 3 | 3 | |
| | | 140.0 | 12 | 5 | 5 | 6 | 4 | 8 | 3 | 3 | 4 | | 7 | 3 | 3 | 3 | | 6 | | | 3 | |
| | | 180.0 | 9 | 4 | 4 | 4 | 3 | 6 | 3 | | 3 | | 6 | | | 3 | | 6 | | | 3 | |
| | | 230.0 | 7 | 3 | 3 | 3 | | 6 | | | 3 | | 6 | | | 3 | | 6 | | | 3 | |
| | 1/4"ø ELCO CRETE FLEX WITH 1-3/4" MIN. EMBEDMENT (MIN. 3,350 P.S.I. CONCRETE) | 75.0 | 12 | 12 | 12 | 12 | 9 | 12 | 9 | 8 | 10 | 6 | 12 | 7 | 7 | 8 | 5 | 11 | 5 | 4 | 5 | 3 |
| | | 90.0 | 12 | 11 | 10 | 12 | 8 | 12 | 7 | 7 | 8 | 5 | 12 | 6 | 6 | 7 | 4 | 9 | 4 | 4 | 4 | 3 |
| | | 140.0 | 12 | 7 | 6 | 7 | 5 | 10 | 4 | 4 | 5 | 3 | 9 | 4 | 3 | 4 | 3 | 8 | 3 | 3 | 4 | |
| | | 180.0 | 12 | 5 | 5 | 6 | 4 | 8 | 3 | 3 | 4 | | 8 | 3 | 3 | 4 | | 8 | 3 | 3 | 4 | |
| | | 230.0 | 9 | 4 | 4 | 4 | 3 | 8 | 3 | 3 | 4 | | 8 | 3 | 3 | 4 | | 8 | 3 | 3 | 4 | |
| | 5/16"ø ITW XL TAPCON WITH 1-1/4" MIN. EMBEDMENT (MIN. 2,900 P.S.I. CONCRETE) | 75.0 | 12 | 12 | 12 | 12 | 10 | 12 | 10 | 9 | 10 | 7 | 12 | 8 | 8 | 9 | 6 | 12 | 5 | 5 | 6 | 4 |
| | | 90.0 | 12 | 12 | 11 | 12 | 9 | 12 | 8 | 7 | 9 | 6 | 12 | 7 | 6 | 7 | 5 | 12 | 4 | 4 | 5 | 3 |
| | | 140.0 | 12 | 7 | 7 | 8 | 5 | 12 | 5 | 5 | 5 | 4 | 12 | 4 | 4 | 4 | 3 | 10 | 4 | 3 | 4 | 3 |
| | | 180.0 | 12 | 6 | 5 | 6 | 4 | 10 | 4 | 3 | 4 | 3 | 10 | 4 | 3 | 4 | 3 | 10 | 4 | 3 | 4 | 3 |
| | | 230.0 | 12 | 4 | 4 | 5 | 3 | 10 | 4 | 3 | 4 | 3 | 10 | 4 | 3 | 4 | 3 | 10 | 4 | 3 | 4 | 3 |
| HOLLOW CONCRETE BLOCK | 1/4"ø ELCO TEXTRON TAPCON WITH 1-1/4" MIN. EMBED. | 75.0 | 9 | 5 | 5 | 6 | 3 | 6 | 3 | 3 | 4 | | 5 | 3 | | 3 | | 3 | | | | |
| | | 90.0 | 7 | 4 | 4 | 5 | 3 | 5 | 3 | | 3 | | 4 | | | 3 | | 3 | | | | |
| | | 140.0 | 4 | | | 3 | | 3 | | | | | | | | | | | | | | |
| | | 180.0 | 3 | | | | | | | | | | | | | | | | | | | |
| | | 230.0 | 3 | | | | | | | | | | | | | | | | | | | |
| | * 1/4"ø ALL-POINTS SOLID-SET ANCHOR WITH 7/8" EMBEDMENT & 1/4-20 STAINLESS STEEL MACHINE SCREW | 75.0 | 12 | 7 | 6 | 7 | 5 | 12 | 5 | 4 | 5 | 3 | 11 | 4 | 4 | 4 | 3 | 7 | | | 3 | |
| | | 90.0 | 12 | 6 | 5 | 6 | 4 | 11 | 4 | 4 | 4 | 3 | 9 | 3 | 3 | 3 | | 6 | | | | |
| | | 140.0 | 10 | 3 | 3 | 4 | | 7 | | | | | 6 | | | | | 5 | | | | |
| | | 180.0 | 7 | 3 | | 3 | | 5 | | | | | 5 | | | | | 5 | | | | |
| | | 230.0 | 6 | | | | | 5 | | | | | 5 | | | | | 5 | | | | |

### MIN. 3" EDGE DISTANCE

| EXIST. STRUC. | ANCHOR TYPE | LOAD (W) P.S.F. MAX. (SEE NOTE 1) | SPANS UP TO 6'-0" (SEE NOTE 1) CONNECTION TYPE (SEE NOTE 3) | | | | | SPANS UP TO 8'-8" (SEE NOTE 1) CONNECTION TYPE (SEE NOTE 3) | | | | | SPANS UP TO 10'-2" (SEE NOTE 1) CONNECTION TYPE (SEE NOTE 3) | | | | | SPANS UP TO 15'-6" (SEE NOTE 1) CONNECTION TYPE (SEE NOTE 3) | | | | |
|---|---|---|---|---|---|---|---|---|---|---|---|---|---|---|---|---|---|---|---|---|---|---|
| | | | C1 | C2 | C3 | C4 | C5 | C1 | C2 | C3 | C4 | C5 | C1 | C2 | C3 | C4 | C5 | C1 | C2 | C3 | C4 | C5 |
| CONCRETE | 1/4"ø ELCO TEXTRON TAPCON WITH 1-3/4" MIN. EMBED. (MIN. 3,320 P.S.I. CONCRETE) | 75.0 | 12 | 11 | 11 | 12 | 8 | 12 | 8 | 7 | 9 | 5 | 12 | 7 | 6 | 7 | 5 | 9 | 4 | 4 | 5 | 3 |
| | | 90.0 | 12 | 9 | 9 | 10 | 7 | 12 | 6 | 6 | 7 | 4 | 12 | 5 | 5 | 6 | 4 | 8 | 3 | 3 | 4 | |
| | | 140.0 | 12 | 6 | 5 | 7 | 4 | 9 | 4 | 4 | 4 | 3 | 8 | 3 | 3 | 4 | | 7 | 3 | 3 | 3 | |
| | | 180.0 | 10 | 4 | 4 | 5 | 3 | 7 | 3 | 3 | 3 | | 7 | 3 | 3 | 3 | | 7 | 3 | 3 | 3 | |
| | | 230.0 | 8 | 3 | 3 | 4 | | 7 | 3 | 3 | 3 | | 7 | 3 | 3 | 3 | | 7 | 3 | 3 | 3 | |
| | 3/8"ø POWERS DROP-IN & 3/8-16 STAINLESS STEEL BOLT WITH 1-9/16" MIN. EMBEDMENT (MIN. 3,000 P.S.I. CONCRETE) | 75.0 | 12 | 12 | 12 | 12 | 10 | 12 | 10 | 9 | 11 | 7 | 12 | 8 | 8 | 9 | 6 | 12 | 5 | 5 | 6 | 4 |
| | | 90.0 | 12 | 12 | 11 | 12 | 9 | 12 | 8 | 8 | 9 | 6 | 12 | 7 | 6 | 8 | 5 | 10 | 4 | 4 | 5 | 3 |
| | | 140.0 | 12 | 8 | 7 | 8 | 5 | 12 | 5 | 5 | 6 | 4 | 10 | 4 | 4 | 5 | 3 | 9 | 4 | 3 | 4 | 3 |
| | | 180.0 | 12 | 6 | 5 | 6 | 4 | 9 | 4 | 4 | 4 | 3 | 9 | 4 | 3 | 4 | 3 | 9 | 4 | 3 | 4 | 3 |
| | | 230.0 | 11 | 4 | 4 | 5 | 3 | 9 | 4 | 3 | 4 | 3 | 9 | 4 | 3 | 4 | 3 | 9 | 4 | 3 | 4 | 3 |
| | * 1/4"ø ALL-POINTS SOLID-SET ANCHOR WITH 7/8" EMBEDMENT & 1/4-20 STAINLESS STEEL MACHINE SCREW (MIN. 3,000 P.S.I. CONCRETE) | 75.0 | 12 | 12 | 12 | 12 | 9 | 12 | 9 | 8 | 10 | 6 | 12 | 8 | 7 | 8 | 5 | 11 | 5 | 4 | 5 | 3 |
| | | 90.0 | 12 | 11 | 10 | 12 | 8 | 12 | 7 | 7 | 8 | 5 | 12 | 6 | 6 | 7 | 4 | 9 | 4 | 4 | 4 | 3 |
| | | 140.0 | 12 | 7 | 6 | 8 | 5 | 10 | 5 | 4 | 5 | 3 | 9 | 4 | 4 | 4 | 3 | 8 | 3 | 3 | 4 | |
| | | 180.0 | 12 | 5 | 5 | 6 | 4 | 8 | 3 | 3 | 4 | | 8 | 3 | 3 | 4 | | 8 | 3 | 3 | 4 | |
| | | 230.0 | 9 | 4 | 4 | 4 | 3 | 8 | 3 | 3 | 4 | | 8 | 3 | 3 | 4 | | 8 | 3 | 3 | 4 | |
| | 1/4"ø ELCO CRETE FLEX WITH 1-3/4" MIN. EMBEDMENT (MIN. 3,350 P.S.I. CONCRETE) | 75.0 | 12 | 12 | 12 | 12 | 11 | 12 | 10 | 10 | 11 | 7 | 12 | 9 | 8 | 10 | 6 | 12 | 6 | 5 | 6 | 4 |
| | | 90.0 | 12 | 12 | 12 | 12 | 9 | 12 | 9 | 8 | 9 | 6 | 12 | 7 | 7 | 8 | 5 | 10 | 5 | 4 | 5 | 3 |
| | | 140.0 | 12 | 8 | 7 | 9 | 6 | 12 | 5 | 5 | 6 | 4 | 10 | 5 | 4 | 5 | 3 | 9 | 4 | 4 | 4 | 3 |
| | | 180.0 | 12 | 6 | 6 | 7 | 4 | 9 | 4 | 4 | 4 | 3 | 9 | 4 | 4 | 4 | 3 | 9 | 4 | 4 | 4 | 3 |
| | | 230.0 | 10 | 5 | 4 | 5 | 3 | 9 | 4 | 4 | 4 | 3 | 9 | 4 | 4 | 4 | 3 | 9 | 4 | 4 | 4 | 3 |
| | 5/16"ø ITW XL TAPCON WITH 1-1/4" MIN. EMBEDMENT (MIN. 2,900 P.S.I. CONCRETE) | 75.0 | 12 | 12 | 12 | 12 | 12 | 12 | 12 | 12 | 12 | 10 | 12 | 12 | 11 | 12 | 8 | 12 | 7 | 7 | 8 | 5 |
| | | 90.0 | 12 | 12 | 12 | 12 | 12 | 12 | 11 | 10 | 12 | 8 | 12 | 10 | 9 | 10 | 7 | 12 | 6 | 6 | 7 | 4 |
| | | 140.0 | 12 | 10 | 10 | 11 | 7 | 12 | 7 | 7 | 8 | 5 | 12 | 6 | 6 | 7 | 4 | 12 | 5 | 5 | 6 | 4 |
| | | 180.0 | 12 | 8 | 7 | 9 | 6 | 12 | 5 | 5 | 6 | 4 | 12 | 5 | 5 | 6 | 4 | 12 | 5 | 5 | 6 | 4 |
| | | 230.0 | 12 | 6 | 6 | 7 | 4 | 12 | 5 | 5 | 6 | 4 | 12 | 5 | 5 | 6 | 4 | 12 | 5 | 5 | 6 | 4 |
| HOLLOW CONCRETE BLOCK | 1/4"ø ELCO TEXTRON TAPCON WITH 1-1/4" MIN. EMBED. | 75.0 | 11 | 6 | 6 | 7 | 4 | 8 | 4 | 4 | 5 | 3 | 6 | 4 | 3 | 4 | | 4 | | | | |
| | | 90.0 | 9 | 5 | 5 | 6 | 3 | 6 | 3 | 3 | 4 | | 5 | 3 | 3 | 3 | | 3 | | | | |
| | | 140.0 | 6 | 3 | 3 | 4 | | 4 | | | | | 3 | | | | | 3 | | | | |
| | | 180.0 | 4 | | | 3 | | 3 | | | | | 3 | | | | | 3 | | | | |
| | | 230.0 | 3 | | | | | 3 | | | | | 3 | | | | | 3 | | | | |
| | * 1/4"ø ALL-POINTS SOLID-SET ANCHOR WITH 7/8" EMBEDMENT & 1/4-20 STAINLESS STEEL MACHINE SCREW | 75.0 | 12 | 9 | 9 | 10 | 7 | 12 | 6 | 6 | 7 | 4 | 12 | 5 | 5 | 6 | 4 | 8 | 3 | 3 | 4 | |
| | | 90.0 | 12 | 8 | 7 | 9 | 5 | 12 | 5 | 5 | 6 | 4 | 10 | 4 | 4 | 5 | 3 | 6 | 3 | | 3 | |
| | | 140.0 | 11 | 5 | 4 | 5 | 3 | 7 | 3 | 3 | 4 | | 6 | 3 | | 3 | | 5 | | | | |
| | | 180.0 | 8 | 4 | 3 | 4 | | 6 | | | 3 | | 5 | | | | | 5 | | | | |
| | | 230.0 | 6 | 3 | | 3 | | 5 | | | | | 5 | | | | | 5 | | | | |

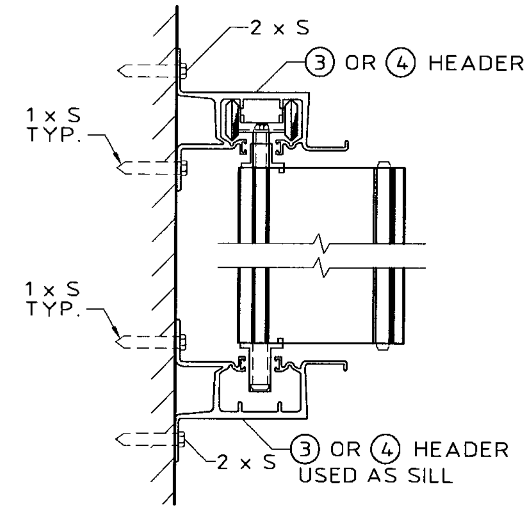


Ⓧ **SPACING SECTION**
SCALE : 3"= 1'- 0"

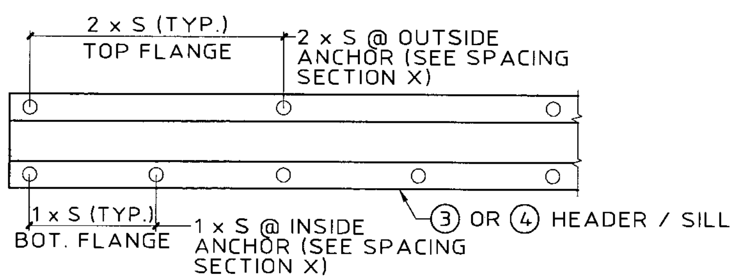


NOTE: "S" INDICATES ANCHOR SCHEDULE SPACING.

**SPACING DIAGRAM FOR C1 CONNECTION TYPE:**

- C1 CONNECTION TYPE USING PIECE ③ OR ④
- APPLICABLE TO HR SYSTEM ONLY

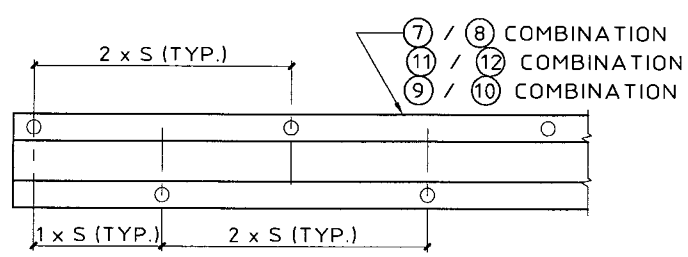


NOTE: "S" INDICATES ANCHOR SCHEDULE SPACING.

**SPACING DIAGRAM FOR C3 & C4 CONNECTION TYPE:**

- C3 CONNECTION TYPE USING PIECE ⑩ WITH OUTSIDE ANCHORS ONLY
- C4 CONNECTION TYPE USING PIECE ⑧ OR ⑫ WITH OUTSIDE ANCHORS ONLY
- APPLICABLE TO HR SYSTEM ONLY

**ANCHOR NOTES:**

1. **SPANS AND LOADS SHOWN HERE ARE FOR DETERMINING ANCHOR SPACING ONLY. ALLOWABLE STORM SHUTTER SPANS FOR SPECIFIC LOADS MUST BE LIMITED TO THOSE SHOWN IN TABLE 3.**
2. REFERENCE SHEET 13 FOR NOTES 2 THRU 10.

PRODUCT REVISED
as complying with the Florida Building Code
Acceptance No 06-0608.02
Expiration Date 07/11/2008
By
Miami Dade Product Control Division

Thornton-Tomasetti Group
330 N. Andrews Ave., Suite 450 • Ft. Lauderdale, FL 33301
Tel. (954) 522-3690 • Fax (954) 522-3691 • COA # 7319
Website: www.TheTTGroup.com

Copyright © 2006 Thornton-Tomasetti Group, Inc.
6.8 & HR SYSTEMS LICENSED BY SOUTHERN SHUTTER ASSOCIATION

6.8 - HR ACCORDION SHUTTER

F & P ALUMINUM SCREEN, INC.
1001 EAST 24TH STREET
HIALEAH, FLORIDA 33013
Tel (305) 693-0017 • FAX (305) 693-4999

J.W. Knezevich
Professional Engineer
FL License No.: PE 0041961

MAY 01 2006

| revisions | | | |
|---|---|---|---|
| no | date | by | description |
| 0 | 06/30/05 | NW | PREVIOUSLY DRAWING NO 03-256 |
| 1 | 12/16/05 | VJK | NEW COMPONENTS |

SSA I.D. # 0605010537 6D

date 06/30/2005
scale AS NOTED | drawn by MCR
design by JWK | checked by JWK
drawing no. 06-388

# HR ACCORDION SHUTTER

**NOT APPLICABLE TO 6.8 ACCORDION SHUTTER**

## ANCHOR SCHEDULE

**FASTENER MAXIMUM SPACING (INCHES) REQUIRED FOR VARIOUS DESIGN LOADS AND SPANS**

| EXIST. STRUC. | ANCHOR TYPE | LOAD (W) P.S.F. MAX. (SEE NOTE 1) | MIN. 3/4" EDGE DISTANCE | | | | | | | | | | | | | | | | | | | |
|---|---|---|---|---|---|---|---|---|---|---|---|---|---|---|---|---|---|---|---|---|---|---|
| | | | SPANS UP TO 6'-0" (SEE NOTE 1) | | | | | SPANS UP TO 8'-8" (SEE NOTE 1) | | | | | SPANS UP TO 10'-2" (SEE NOTE 1) | | | | | SPANS UP TO 15'-6" (SEE NOTE 1) | | | | |
| | | | CONNECTION TYPE (SEE NOTE 3) | | | | | CONNECTION TYPE (SEE NOTE 3) | | | | | CONNECTION TYPE (SEE NOTE 3) | | | | | CONNECTION TYPE (SEE NOTE 3) | | | | |
| | | | C1 | C2 | C3 | C4 | C5 | C1 | C2 | C3 | C4 | C5 | C1 | C2 | C3 | C4 | C5 | C1 | C2 | C3 | C4 | C5 |
| WOOD | 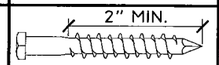 1/4"Ø x MIN. 3" LONG LAG SCREW WITH MIN. 2" EMBED. SHEAR PARALLEL OR PERP. TO WOOD GRAIN | 75.0 | 12 | 7 | 6 | 7 | 6 | 12 | 4 | 4 | 5 | 4 | 12 | 4 | 4 | 4 | 3 | 12 | | | | |
| | | 90.0 | 12 | 5 | 5 | 6 | 5 | 12 | 4 | 3 | 4 | 3 | 12 | 3 | 3 | 3 | 3 | 12 | | | | |
| | | 140.0 | 12 | 3 | 3 | 3 | 3 | 12 | | | | | 12 | | | | | 10 | | | | |
| | | 180.0 | 12 | | | 3 | | 11 | | | | | 10 | | | | | 10 | | | | |
| | | 230.0 | 12 | | | | | 10 | | | | | 10 | | | | | 10 | | | | |
| | 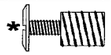 7/16"Ø WOOD BUSHING WITH 5/8" MIN. EMBED. & 1/4-20 STAINLESS STEEL MACHINE SCREW | 75.0 | 10 | | | | | 7 | | | | | 6 | | | | | 4 | | | | |
| | | 90.0 | 9 | | | | | 6 | | | | | 5 | | | | | 3 | | | | |
| | | 140.0 | 5 | | | | | 4 | | | | | 3 | | | | | | | | | |
| | | 180.0 | 4 | | | | | 3 | | | | | | | | | | | | | | |
| | | 230.0 | 3 | | | | | | | | | | | | | | | | | | | |

## ANCHOR SCHEDULE

**FASTENER MAXIMUM SPACING (INCHES) REQUIRED FOR VARIOUS DESIGN LOADS AND SPANS**

| EXIST. STRUC. | ANCHOR TYPE | LOAD (W) P.S.F. MAX. (SEE NOTE 1) | MIN. 2-1/2" EDGE DISTANCE | | | | | | | | | | | | | | | | | | | |
|---|---|---|---|---|---|---|---|---|---|---|---|---|---|---|---|---|---|---|---|---|---|---|
| | | | SPANS UP TO 6'-0" (SEE NOTE 1) | | | | | SPANS UP TO 8'-8" (SEE NOTE 1) | | | | | SPANS UP TO 10'-2" (SEE NOTE 1) | | | | | SPANS UP TO 15'-6" (SEE NOTE 1) | | | | |
| | | | CONNECTION TYPE (SEE NOTE 3) | | | | | CONNECTION TYPE (SEE NOTE 3) | | | | | CONNECTION TYPE (SEE NOTE 3) | | | | | CONNECTION TYPE (SEE NOTE 3) | | | | |
| | | | C1 | C2 | C3 | C4 | C5 | C1 | C2 | C3 | C4 | C5 | C1 | C2 | C3 | C4 | C5 | C1 | C2 | C3 | C4 | C5 |
| CONCRETE | 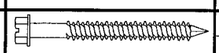 1/4"Ø ITW TAPCON WITH 1-3/4" MIN. EMBEDMENT (MIN. 3,192 P.S.I. CONCRETE) | 75.0 | 12 | 11 | 10 | 12 | 8 | 12 | 8 | 7 | 8 | 6 | 12 | 6 | 6 | 7 | 5 | 11 | 4 | 4 | 4 | 3 |
| | | 90.0 | 12 | 9 | 9 | 10 | 7 | 12 | 6 | 6 | 7 | 5 | 12 | 5 | 5 | 6 | 4 | 9 | 3 | 3 | 4 | |
| | | 140.0 | 12 | 6 | 5 | 6 | 4 | 11 | 4 | 4 | 4 | 3 | 9 | 3 | 3 | 3 | | 8 | 3 | 3 | 3 | |
| | | 180.0 | 12 | 4 | 4 | 5 | 3 | 8 | 3 | 3 | 3 | | 8 | 3 | 3 | 3 | | 8 | 3 | 3 | 3 | |
| | | 230.0 | 10 | 3 | 3 | 4 | | 8 | 3 | 3 | 3 | | 8 | 3 | 3 | 3 | | 8 | 3 | 3 | 3 | |
| HOLLOW CONCRETE BLOCK | 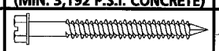 1/4"Ø ITW TAPCON WITH 1-1/4" MIN. EMBEDMENT | 75.0 | 10 | 5 | 5 | 6 | 3 | 7 | 3 | 3 | 4 | | 6 | 3 | 3 | 3 | | 4 | | | | |
| | | 90.0 | 8 | 4 | 4 | 5 | 3 | 5 | 3 | | 3 | | 5 | | | 3 | | 3 | | | | |
| | | 140.0 | 5 | | | 3 | | 3 | | | | | 3 | | | | | | | | | |
| | | 180.0 | 4 | | | | | | | | | | | | | | | | | | | |
| | | 230.0 | 3 | | | | | | | | | | | | | | | | | | | |

## ANCHOR SCHEDULE

**FASTENER MAXIMUM SPACING (INCHES) REQUIRED FOR VARIOUS DESIGN LOADS AND SPANS**

| EXIST. STRUC. | ANCHOR TYPE | LOAD (W) P.S.F. MAX. (SEE NOTE 1) | MIN. 4" EDGE DISTANCE | | | | | | | | | | | | | | | | | | | |
|---|---|---|---|---|---|---|---|---|---|---|---|---|---|---|---|---|---|---|---|---|---|---|
| | | | SPANS UP TO 6'-0" (SEE NOTE 1) | | | | | SPANS UP TO 8'-8" (SEE NOTE 1) | | | | | SPANS UP TO 10'-2" (SEE NOTE 1) | | | | | SPANS UP TO 15'-6" (SEE NOTE 1) | | | | |
| | | | CONNECTION TYPE (SEE NOTE 3) | | | | | CONNECTION TYPE (SEE NOTE 3) | | | | | CONNECTION TYPE (SEE NOTE 3) | | | | | CONNECTION TYPE (SEE NOTE 3) | | | | |
| | | | C1 | C2 | C3 | C4 | C5 | C1 | C2 | C3 | C4 | C5 | C1 | C2 | C3 | C4 | C5 | C1 | C2 | C3 | C4 | C5 |
| HOLLOW CONCRETE BLOCK | 5/16"Ø ITW XL TAPCON WITH 1-1/4" MIN. EMBEDMENT | 75.0 | 12 | 8 | 7 | 9 | 5 | 9 | 6 | 5 | 6 | 3 | 8 | 5 | 4 | 5 | 3 | 5 | 3 | 3 | 3 | |
| | | 90.0 | 11 | 7 | 6 | 8 | 4 | 8 | 5 | 4 | 5 | 3 | 6 | 4 | 3 | 4 | | 4 | | | 3 | |
| | | 140.0 | 7 | 4 | 4 | 5 | 3 | 5 | 3 | | 3 | | 4 | | | 3 | | 3 | | | | |
| | | 180.0 | 5 | 3 | 3 | 4 | | 4 | | | | | 3 | | | | | 3 | | | | |
| | | 230.0 | 4 | | | 3 | | 3 | | | | | 3 | | | | | 3 | | | | |

## ANCHOR SCHEDULE

**FASTENER MAXIMUM SPACING (INCHES) REQUIRED FOR VARIOUS DESIGN LOADS AND SPANS**

| EXIST. STRUC. | ANCHOR TYPE | LOAD (W) P.S.F. MAX. (SEE NOTE 1) | MIN. 4-1/2" EDGE DISTANCE | | | | | | | | | | | | | | | | | | | |
|---|---|---|---|---|---|---|---|---|---|---|---|---|---|---|---|---|---|---|---|---|---|---|
| | | | SPANS UP TO 6'-0" (SEE NOTE 1) | | | | | SPANS UP TO 8'-8" (SEE NOTE 1) | | | | | SPANS UP TO 10'-2" (SEE NOTE 1) | | | | | SPANS UP TO 15'-6" (SEE NOTE 1) | | | | |
| | | | CONNECTION TYPE (SEE NOTE 3) | | | | | CONNECTION TYPE (SEE NOTE 3) | | | | | CONNECTION TYPE (SEE NOTE 3) | | | | | CONNECTION TYPE (SEE NOTE 3) | | | | |
| | | | C1 | C2 | C3 | C4 | C5 | C1 | C2 | C3 | C4 | C5 | C1 | C2 | C3 | C4 | C5 | C1 | C2 | C3 | C4 | C5 |
| CONCRETE | 3/8"Ø POWERS DROP -IN & 3/8-16 STAINLESS STEEL BOLT WITH 1-9/16" MIN. EMBEDMENT (MIN. 3,000 P.S.I. CONCRETE) | 75.0 | 12 | 12 | 12 | 12 | 12 | 12 | 12 | 12 | 12 | 10 | 12 | 12 | 12 | 12 | 9 | 12 | 8 | 8 | 9 | 6 |
| | | 90.0 | 12 | 12 | 12 | 12 | 12 | 12 | 12 | 12 | 12 | 9 | 12 | 11 | 10 | 12 | 7 | 12 | 7 | 6 | 8 | 5 |
| | | 140.0 | 12 | 12 | 11 | 12 | 8 | 12 | 8 | 7 | 9 | 5 | 12 | 7 | 6 | 8 | 4 | 11 | 6 | 5 | 7 | 4 |
| | | 180.0 | 12 | 9 | 8 | 10 | 6 | 12 | 6 | 6 | 7 | 4 | 11 | 6 | 5 | 7 | 4 | 11 | 6 | 5 | 7 | 4 |
| | | 230.0 | 12 | 7 | 6 | 8 | 5 | 11 | 6 | 5 | 7 | 4 | 11 | 6 | 5 | 7 | 4 | 11 | 6 | 5 | 7 | 4 |

**ANCHOR NOTES:**

1. **SPANS AND LOADS SHOWN HERE ARE FOR DETERMINING ANCHOR SPACING ONLY. ALLOWABLE STORM SHUTTER SPANS FOR SPECIFIC LOADS MUST BE LIMITED TO THOSE SHOWN IN TABLE 3.**
2. ENTER ANCHOR SCHEDULE BASED ON THE EXISTING STRUCTURE MATERIAL, ANCHOR TYPE AND EDGE DISTANCE. SELECT DESIGN LOAD GREATER THAN OR EQUAL TO NEGATIVE DESIGN LOAD ON SHUTTER AND SELECT SPAN GREATER THAN OR EQUAL TO SHUTTER SPAN.
3. SEE MOUNTING SECTION DETAILS FOR IDENTIFICATION OF CONNECTION TYPE.
4. EXISTING STRUCTURE MAY BE CONCRETE, ASTM C-90 HOLLOW CONCRETE BLOCK OR WOOD FRAMING. REFERENCE ANCHOR SCHEDULE FOR PROPER ANCHOR TYPE BASED ON TYPE OF EXISTING STRUCTURE AND APPROPRIATE CONNECTION TYPE. SEE CONNECTION DETAILS FOR IDENTIFICATION OF CONNECTION TYPE.
5. ANCHORS SHALL BE INSTALLED IN ACCORDANCE WITH MANUFACTURERS' RECOMMENDATIONS. EMBEDMENT LENGTHS SHALL BE AS NOTED AND DO NOT INCLUDE STUCCO OR OTHER FINISHES.
6. WHERE EXISTING STRUCTURE IS WOOD FRAMING, WOOD FRAMING CONDITIONS VARY. FIELD VERIFY THAT FASTENERS ARE INTO ADEQUATE WOOD FRAMING MEMBERS, NOT PLYWOOD. FASTENING TO PLYWOOD IS ACCEPTABLE ONLY FOR SIDE CLOSURE PIECES.
7. WHERE LAG SCREWS FASTEN TO NARROW FACE OF STUD FRAMING, FASTENER SHALL BE LOCATED IN CENTER OF NOMINAL 2" x 4" (MIN.) WOOD STUD. 3/4" EDGE DISTANCE IS ACCEPTABLE FOR WOOD FRAMING. WOOD STUD SHALL BE "SOUTHERN PINE" G=0.55 OR GREATER DENSITY. LAG SCREWS SHALL HAVE PHILLIPS PAN HEAD OR HEX HEAD.
8. MACHINE SCREWS SHALL HAVE MINIMUM OF 1/2" ENGAGEMENT OF THREADS IN BASE ANCHOR AND MAY HAVE EITHER A PAN HEAD, TRUSS HEAD, OR WAFER HEAD (SIDEWALK BOLT), U.O.N.
9. DESIGNATES ANCHOR CONDITIONS WHICH ARE NOT ACCEPTABLE USES.
10. * DESIGNATES ANCHORS WHICH ARE REMOVABLE BY REMOVING MACHINE SCREW, NUT OR WASHERED WINGNUT.

PRODUCT REVISED
as complying with the Florida
Building Code
Acceptance No 06-0608.02
Expiration Date 07/11/2008
By Helena A. Molina
Miami Dade Product Control
Division


Thornton•Tomasetti Group
330 N. Andrews Ave. Suite 450 • Ft. Lauderdale, Fl. 33301
Tel. (954) 522-3690 • Fax (954) 522-3691 • COA # 7519
Website: www.TheTTGroup.com



Copyright © 2006 Thornton-Tomasetti Group, Inc.
6.8 & HR SYSTEMS LICENSED BY SOUTHERN SHUTTER ASSOCIATION


6.8 - HR
ACCORDION SHUTTER

NEW F & P ALUMINUM SCREEN, INC.
1001 EAST 24TH STREET
HIALEAH, FLORIDA 33013
TEL:(305) 693-00 17 • FAX:(305) 693-4099

J.W. Knezevich
Professional Engineer
FL License No.: PE 0041961

MAY 01 2006

| revisions | | | |
|---|---|---|---|
| no | date | by | description |
| 0 | 06/30/05 | NW | PREVIOUSLY DRAWING NO. 03-258 |
| 1 | 12/16/05 | VJK | NEW COMPONENTS |

SSA I.D. # 060501053760

date 06/30/2005
scale AS NOTED
drawn by MCR
design by JWK
checked by JWK
drawing no. 06-388
sheet 13 of 13


Print Information: P:\FL1\KA\CADD\Associations\SSA\F_and_P\06-388\R1-sub\06-388-13.dwg AVazquez 05/01/2006 01:43:15pm 05/01/06 13:02