MIAMI-DADE

BUILDING CODE COMPLIANCE OFFICE (BCCO)
PRODUCT CONTROL DIVISION

MIAMI-DADE COUNTY, FLORIDA
METRO-DADE FLAGLER BUILDING
140 WEST FLAGLER STREET, SUITE 1603
MIAMI, FLORIDA 33130-1563
(305) 375-2901 FAX (305) 375-2908

NOTICE OF ACCEPTANCE (NOA)

Merchant & Evans, Inc.
308 Connecticut Drive
Burlington, NJ 08016

SCOPE:

This NOA is being issued under the applicable rules and regulations governing the use of construction materials. The documentation submitted has been reviewed by Miami-Dade County Product Control Division and accepted by the Board of Rules and Appeals (BORA) to be used in Miami Dade County and other areas where allowed by the Authority Having Jurisdiction (AHJ).

This NOA shall not be valid after the expiration date stated below. The Miami-Dade County Product Control Division (In Miami Dade County) and/or the AHJ (in areas other than Miami Dade County) reserve the right to have this product or material tested for quality assurance purposes. If this product or material fails to perform in the accepted manner, the manufacturer will incur the expense of such testing and the AHJ may immediately revoke, modify, or suspend the use of such product or material within their jurisdiction. BORA reserves the right to revoke this acceptance, if it is determined by Miami-Dade County Product Control Division that this product or material fails to meet the requirements of the applicable building code.

This product is approved as described herein, and has been designed to comply with the High Velocity Hurricane Zone of the Florida Building Code.

DESCRIPTION: Merchant & Evans, Inc. Aluminum Zip Rib Standing Seam Roof Panel

LABELING: Each panel shall bear a permanent label with the manufacturer's name or logo, city, state and the following statement: "Miami-Dade County Product Control Approved", unless otherwise noted herein.

RENEWAL of this NOA shall be considered after a renewal application has been filed and there has been no change in the applicable building code negatively affecting the performance of this product.

TERMINATION of this NOA will occur after the expiration date or if there has been a revision or change in the materials, use, and/or manufacture of the product or process. Misuse of this NOA as an endorsement of any product, for sales, advertising or any other purposes shall automatically terminate this NOA. Failure to comply with any section of this NOA shall be cause for termination and removal of NOA.

ADVERTISEMENT: The NOA number preceded by the words Miami-Dade County, Florida, and followed by the expiration date may be displayed in advertising literature. If any portion of the NOA is displayed, then it shall be done in its entirety.

INSPECTION: A copy of this entire NOA shall be provided to the user by the manufacturer or its distributors and shall be available for inspection at the job site at the request of the Building Official.

This NOA renews and revises NOA #04-0430.01 and consists of pages 1 through 7.
The submitted documentation was reviewed by Alex Tigera.

PRODUCT CONTROL ACCEPTED

ROOFING ASSEMBLY APPROVAL:

Category:	Roofing
Sub-Category:	Non-Structural Metal Roofing
Material:	Aluminum
Deck Type:	Steel
Maximum Design Pressure	**-210 psf.**
Fire Classificationn Pressure	See General Limitation #1

TRADE NAMES OF PRODUCTS MANUFACTURED OR LABELED BY APPLICANT:

Product	Dimensions	Test Specifications	Product Description
Merchant & Evans, Inc. Aluminum Zip Rib Standing Seam Roof Panel	Length: varies Max. Width: 16" Height: 2-½" Min. Thickness: 0.040"	TAS 125	Aluminum Zip Rib Roof panel .
#2080 Panel Clips	l = 4-½" w = 2-$^{15}/_{16}$" h = 2-7/8"	TAS 110	Sliding hook clip with stainless steel hook. Galvanized or Stainless steel base.
Gable Clips	l = 2 3/4" w = 3" h = 3 1/16"	TAS 110	Aluminum gable clip with prepunched holes.

EVIDENCE SUBMITTED:

Test Agency	Test Identifier	Test Name/Report	Date
Architectural Testing, Inc.	ATI 18864	TAS 125 TAS 100	12/12/96
Architectural Testing, Inc.	60386.01-122-44	TAS 125	04/05/06
Morton		ASTM G23 ASTM B 117	09/15/97
Factory Mutual	3006246	FM 4471	10/04/2000

APPROVED ASSEMBLIES:

SYSTEM A(1):	Aluminum Zip Rib Standing Seam Roof Panel **12" Wide Panel**
Deck Type:	**22** ga. Steel for Field Conditions **20** ga. Steel for Perimeter and Corner Conditions
Deck Description:	ASTM A 653 Grade 80 Type B Steel Deck.
Slope Range:	See applicable Building Code
Maximum Uplift Pressure:	**See Table A Below**

Deck Attachment: Minimum gage steel deck, **as specified below in Table A**, shall be secured 6" o.c. to structural supports spaced a maximum of 5 ft o.c. with #12-14 x 1-¼" TRAXX/5 screws fastened at the bottom of each flute (6" o.c.). Deck sidelaps shall be fastened 15" o.c. with #10-14 x $^{7}/_{8}$" TRAXX/1 screws.

Insulation: 1-½" thick of an approved polyisocyanurate having a current NOA with a minimum 25 psi compressive strength fastened with approved fasteners and plates. Fastening density shall be in compliance with applicable Building Code and Roofing Application Standard RAS 117. Insulation boards shall be preliminary attached, prior to the installation of the "Fire Barrier Board" at a minimum application rate of two fasteners per board for insulation boards having no dimension greater than 4 ft., and four fasteners for any insulation board having no dimension greater than 8 ft

Fire Barrier Board: Install minimum ½" thick Georgia Pacific "Dens Deck" (with current NOA), or Loadmaster Duraflex Minreal Board (with current NOA). Fastening density shall be in compliance with applicable Building Code and Roofing Application Standard RAS 117.

Underlayment: Any Miami-Dade County Product Control Approved self-adhering underlayment having a current NOA.

Valleys: Valley construction shall be in compliance with Roofing Application Standard RAS 133 and with Merchant & Evans, Inc.'s current published installation instructions.

Metal Panels and Accessories:

Install the " Merchant & Evans, Inc. **Zip Rib** Aluminum Standing Seam Panels" and accessories in compliance with Merchant & Evans, Inc.'s current, published installation instructions and details. Flashing, penetrations, valley construction and other details shall be constructed in compliance with the minimum requirements provided in Roofing Application Standards RAS 133.

Panels shall be installed with approved #2080 clips, attached to substrate with two (2) #14 corrosion resistant fasteners of sufficient length to penetrate through the bottom flute of steel deck a minimum of ¾". Clip fastening shall not exceed 24" o.c., see drawings herein. Standing seams shall be mechanically seamed with an electric power seamer for the finish crimp.

TABLE A
MAXIMUM DESIGN PRESSURES FOR 12" WIDE PANEL

Roof Areas	**Field**	**Perimeter and Corner[1]**
Maximum Design Pressures	**–131.25 psf**	**–210 psf**
Minimum Gage Type B-Deck	**22 ga.**	**20 ga.**

1. Extrapolation shall not be allowed

SYSTEM A(2):	Aluminum Zip Rib Standing Seam Roof Panel
Deck Type:	18-22 ga. Steel
Deck Description:	ASTM A 653 Grade 80 Type B Steel Deck.
Slope Range:	See applicable Building Code
Maximum Uplift Pressure:	The maximum allowable design pressure for the **maximum 16" wide** Zip Rib Standing Seam Roof panel shall be **–45** psf
Deck Attachment:	Minimum 22 gage steel deck shall be secured 6" o.c. to structural supports spaced a maximum of 5 ft o.c. with #12-14 x 1-¼" TRAXX/5 screws fastened at the bottom of each flute (6" o.c.). Deck sidelaps shall be fastened 15" o.c. with #10-14 x $^7/_8$" TRAXX/5 screws.
Insulation:	1-½" thick of an approved polyisocyanurate having a current NOA with a minimum 25 psi compressive strength fastened with approved fasteners and plates. Fastening density shall be in compliance with applicable Building Code and Roofing Application Standard RAS 117. Insulation boards shall be preliminary attached, prior to the installation of the "Fire Barrier Board" at a minimum application rate of two fasteners per board for insulation boards having no dimension greater than 4 ft., and four fasteners for any insulation board having no dimension greater than 8 ft
Fire Barrier Board:	Install minimum ½" thick Georgia Pacific "Dens Deck" (with current NOA), or Loadmaster Duraflex Minreal Board (with current NOA). Fastening density shall be in compliance with applicable Building Code and Roofing Application Standard RAS 117.
Underlayment:	Any Miami-Dade County Product Control Approved self-adhering underlayment having a current NOA.
Valleys:	Valley construction shall be in compliance with Roofing Application Standard RAS 133 and with Merchant & Evans, Inc.'s current published installation instructions.
Metal Panels and Accessories:	Install the " Merchant & Evans, Inc. **Zip Rib** Aluminum Standing Seam Panels" and accessories in compliance with Merchant & Evans, Inc.'s current, published installation instructions and details. Flashing, penetrations, valley construction and other details shall be constructed in compliance with the minimum requirements provided in Roofing Application Standards RAS 133. Panels shall be installed with approved #2080 clips, attached to substrate with two (2) #14 corrosion resistant fasteners of sufficient length to penetrate through the bottom flute of steel deck a minimum of ¾". Clip fastening shall not exceed 24" o.c., see drawings herein. Standing seams shall be mechanically seamed with an electric power seamer for the finish crimp.

LIMITATION:

1. Fire classification is not part of this acceptance; refer to a current Approved Roofing Materials Directory for fire ratings of this product.
2. The maximum designed pressure listed herein shall be applicable to all roof pressure zones (i.e. field, perimeters, and corners). Neither rational analysis, nor extrapolation shall be permitted for enhanced fastening at enhanced pressure zones (i.e. perimeters, extended corners and corners).
3. Panels may be roll formed in continuous lengths from eave to ridge. Maximum lengths shall be as described in Roofing Application Standard RAS 133.
4. All panels shall be permanently labeled with the manufacturer's name or logo, city, state and the following statement: "Miami Dade County Product Control Approved". All clips shall be permanently labeled with the manufacturer's name and/or logo, and/or model.
5. All products listed herein shall have a quality assurance audit in accordance with the Florida Building Code and Rule 9B-72 of the Florida Administrative Code.

DRAWINGS

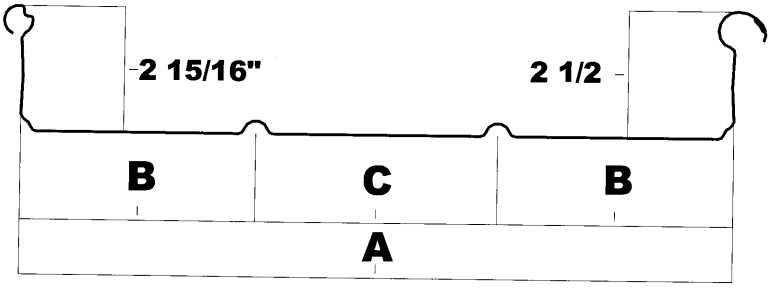

WIDTH	"A"	"B"	"C"
12"	11 7/8" ±1/16"	3 15/16"	4"
16"	15 7/8" ±1/16"	5 1/4"	5 3/8"

ZIP-RIB PANEL

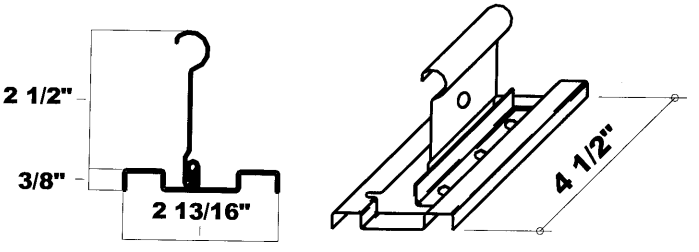

2080 PANEL CLIP

DRAWINGS CON'T

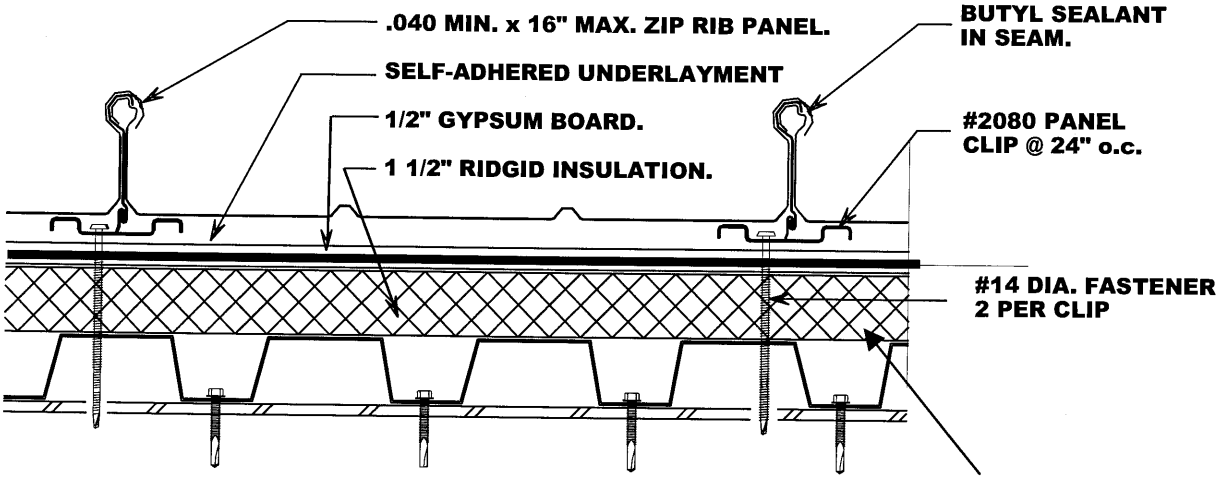

System A-1: 22GA. Deck for Field Condition
20GA. Deck for Perimeter and Corner Condition
System A-2: 22ga. Deck

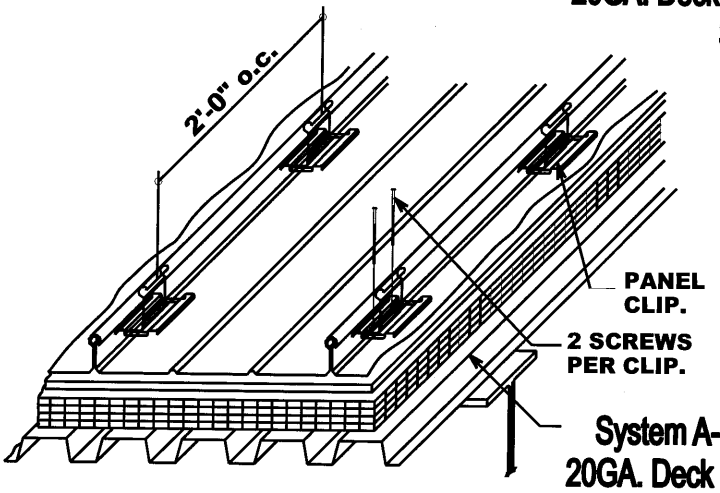

System A-1: 22GA. Deck for Field Condition
20GA. Deck for Perimeter and Corner Condition
System A-2: 22ga. Deck

END OF THIS ACCEPTANCE