MIAMI-DADE

BUILDING CODE COMPLIANCE OFFICE (BCCO)
PRODUCT CONTROL DIVISION

MIAMI-DADE COUNTY, FLORIDA
METRO-DADE FLAGLER BUILDING
140 WEST FLAGLER STREET, SUITE 1603
MIAMI, FLORIDA 33130-1563
(305) 375-2901 FAX (305) 375-2908

# NOTICE OF ACCEPTANCE (NOA)

**West Palm Installer, Inc.**
**6819 NW 84th Avenue**
**Doral, FL 33166**

**SCOPE:**

This NOA is being issued under the applicable rules and regulations governing the use of construction materials. The documentation submitted has been reviewed by Miami-Dade County Product Control Division and accepted by the Board of Rules and Appeals (BORA) to be used in Miami Dade County and other areas where allowed by the Authority Having Jurisdiction (AHJ).

This NOA shall not be valid after the expiration date stated below. The Miami-Dade County Product Control Division (In Miami Dade County) and/or the AHJ (in areas other than Miami Dade County) reserve the right to have this product or material tested for quality assurance purposes. If this product or material fails to perform in the accepted manner, the manufacturer will incur the expense of such testing and the AHJ may immediately revoke, modify, or suspend the use of such product or material within their jurisdiction. BORA reserves the right to revoke this acceptance, if it is determined by Miami-Dade County Product Control Division that this product or material fails to meet the requirements of the applicable building code.

This product is approved as described herein, and has been designed to comply with the Florida Building Code including the High Velocity Hurricane Zone.

**DESCRIPTION: 60mm Bertha Roll Up Shutter**

**APPROVAL DOCUMENT:** Drawing No. 06-160, titled " 60 mm Bertha Roll-Up", prepared by Tilteco, Inc. dated 06/16/06, with no revisions, sheets 1 through 14 of 14 including 1A & 5A bearing the Miami-Dade County Product Control Approval stamp with the Notice of Acceptance number and approval date by the Miami-Dade County Product Control Division.

**MISSILE IMPACT RATING: Large and Small Missile Impact**

**LABELING:** Each unit shall bear a permanent label with the manufacturer's name or logo, city, state and the following statement: "Miami-Dade County Product Control Approved or MDCPCA", unless otherwise noted herein.

**RENEWAL** of this NOA shall be considered after a renewal application has been filed and there has been no change in the applicable building code negatively affecting the performance of this product.

**TERMINATION** of this NOA will occur after the expiration date or if there has been a revision or change in the materials, use, and/or manufacture of the product or process. Misuse of this NOA as an endorsement of any product, for sales, advertising or any other purposes shall automatically terminate this NOA. Failure to comply with any section of this NOA shall be cause for termination and removal of NOA.

**ADVERTISEMENT:** The NOA number preceded by the words Miami-Dade County, Florida, and followed by the expiration date may be displayed in advertising literature. If any portion of the NOA is displayed, then it shall be done in its entirety.

**INSPECTION:** A copy of this entire NOA shall be provided to the user by the manufacturer or its distributors and shall be available for inspection at the job site at the request of the Building Official.

This NOA **is an association member of ASSA # 05-0215** and consists of this page, evidence page as well as approval document mentioned above.

The submitted documentation was reviewed by **Candido F. Font, P.E.**

09/14/06

PRODUCT CONTROL ACCEPTED

**Florida Hurricane Protection, Inc.**

## NOTICE OF ACCEPTANCE: EVIDENCE PAGE

**A DRAWING**

1. Drawing No. 06-160, titled " 60 mm Bertha Roll-Up", Sheets 1 through 14 including 1A of 5A, prepared by Tilteco, Inc., dated 06/16/06, with no revisions, signed and sealed by Walter A.Tillit Jr., PE.

**B TEST**

1. Test report on Large Missile Impact Test per PA 201, Cyclic Wind Pressure Test per PA 203 and Uniform Static Air Pressure Test per PA 202, of "Series: 60mm; Aluminum Roll Up Shutter", prepared by Fenestration Testing Laboratory, Inc., Report No. 2751, dated 08/24/2000, signed and sealed by A. Acevedo, PE.
2. Test report on Large Missile Impact Test per PA 201of "Aluminum Storm Bar", prepared by Fenestration Testing Laboratory, Inc., Report No. 2760, dated 08/31/2000, signed and sealed by A. Acevedo, PE.

**C CALCULATIONS**

1. Comparative analysis for slats; storm bars, headers and anchors using rational analysis dated 09/14/00, pages 1 through 167 of 167, prepared by Tilteco Inc., signed and sealed by W. A. Tillit Jr., PE. on 04/06/01.

**D QUALITY ASSURANCE**

1. Building Code Compliance Office.

**E MATERIAL CERTIFICATION**

1. Tensile Test Report No. 13974.0001, per ASTM B 557, prepared by ATC Associates, Inc. dated 09/20/00, signed and sealed by S.E. black, PE.

**F STATEMENTS**

1. Letter of Code Compliance issued by Tilteco, Inc., on 04/04/2001, signed and sealed by W. Tillit Jr., PE.
2. No-financial interest letter issued by Tilteco, Inc., on 04/04/2001, signed and sealed by W. Tillit Jr., PE.
3. Test compliance letter issued by Fenestration Testing Laboratory, Inc. on 04/30/2001, signed and sealed by A. Acevedo, PE.
4. Relinquishing test letter issued by Weather Guard, Inc. on 04/06/2001, signed by D. D. Thomas.
5. Advise of purchase letter issued by American Shutter Systems Association, Inc, on 04/09/2001, signed by W. Feeley.
6. Manufacturer's letter issued by West Palm Installer Inc, on 06/14/06 and signed
7. by L. Montalvo.
8. Associate letter issued by ASSA Inc. on 06/16/06 and signed by L. Santana.

09/14/06

**Candido F. Font, P. E.**
**Senior Product Control Examiner**
**NOA No 06-0710.02**
**Expiration Date: September 14, 2011**
**Approval Date: September 14, 2006**

## GENERAL NOTES:

1. ASSA/60mm BERTHA ROLL-UP SHOWN ON THIS PRODUCT APPROVAL DOCUMENT HAS BEEN VERIFIED FOR CODE COMPLIANCE IN ACCORDANCE WITH THE 2004 EDITION OF THE FLORIDA BUILDING CODE.
DESIGN WIND LOADS SHALL BE DETERMINED AS PER SECTION 1620 OF THE ABOVE MENTIONED CODE. IN ORDER TO VERIFY THAT COMPONENTS AND ANCHORS ON THIS P.A.D. AS TESTED WERE NOT OVER STRESSED, A 33% INCREASE IN ALLOWABLE STRESS FOR WIND LOADS WAS **NOT** USED IN THEIR ANALYSIS. A DURATION FACTOR CD=1.60 WAS USED FOR VERIFICATION OF FASTENERS IN WOOD.
ASSA/60mm BERTHA ROLL-UP ADEQUACY FOR IMPACT AND FATIGUE RESISTANCE HAS BEEN VERIFIED IN ACCORDANCE WITH SECTION 1606.1.4 OF THE ABOVE MENTIONED CODE AS PER FENESTRATION TESTING LAB. REPORTS # 2751 & 2760 AS PER TAS-201, TAS-202 & TAS-203 PROTOCOLS.

2. ALL ALUMINUM EXTRUSIONS SHALL BE 6063-T6 ALLOY (UNLESS OTHERWISE NOTED).

3. ALL SCREWS TO BE STAINLESS STEEL 304 OR 316 SERIES W/50 ksi YIELD STRENGTH AND 90 ksi TENSILE STRENGTH OR CORROSION RESISTANT COATED CARBON STEEL AS PER DIN 50018. ALL S.M.S. ARE TEK SCREWS MANUFACTURED BY ITW-BUILDEX.

4. BOLTS TO BE A.S.T.M.-307, GALVANIZED OR AISI 304 SERIES STAINLESS STEEL WITH 36 ksi MINIMUM YIELD STRENGTH.

5. STORM BARS AT FLOOR OR CEILING MOUNTING INSTALLATIONS MAY BE REMOVABLE AT NON HURRICANE CONDITIONS. HOWEVER, EACH STORM BAR SHALL BEAR A PERMANENT LABEL IN A VISIBLE PLACE WITH A WARNING NOTE INSTRUCTING THE TENANT OR OWNER THAT STORM BARS MUST BE INSTALLED WITH CORRESPONDING HARDWARE DURING PERIODS OF HURRICANE WARNING AND THAT ROLL UP SHUTTERS WILL NOT OFFER HURRICANE PROTECTION UNLESS ALL STORM BARS ARE INSTALLED AS DIRECTED.

6. REMOVABLE STORM BARS SHALL BE STORED IN A CONSPICUOUS PLACE WITH EASY AND IMMEDIATE ACCESS SO THAT THEY CAN BE REACHED AND INSTALLED ANY TIME (HURRICANE CONDITIONS OR NOT) SLATS ARE ROLLED DOWN. THE EFFECT OF THE SLATS ROLLED DOWN WITHOUT STORM BARS IS; THOSE SLATS WILL SLIP OUT OF TRACK DUE TO THE DEFLECTION CAUSED BY WIND FORCES.

7. ANCHORS TO WALL FOR SIDE RAILS & BOX CONNECTION SHALL BE AS FOLLOWS: (UNLESS OTHERWISE NOTED)

(A) TO EXISTING POURED CONCRETE (f'c= 3320 psi Min.):

-1/4" ø TAPCON ANCHORS AS MANUFACTURED BY ELCO TEXTRON.

NOTES:

A.1) MINIMUM EMBEDMENT OF TAPCON ANCHORS INTO POURED CONCRETE SHALL BE 1 3/4".
NO EMBEDMENT INTO STUCCO SHALL BE CONSIDERED AS PART OF THE REQUIRED EMBEDMENT.

A.2) IN CASE THAT PRECAST STONE, PRECAST CONCRETE PANELS, OR PAVERS BE FOUND ON THE EXISTING WALL OR FLOOR, ANCHORS SHALL BE LONG ENOUGH TO REACH THE MAIN STRUCTURE BEHIND SUCH PANELS.

(B) TO EXISTING CONCRETE BLOCK WALL:

-1/4" ø TAPCON ANCHORS, AS MANUFACTURED BY ELCO TEXTRON.

NOTES:

B.1) MINIMUM EMBEDMENT OF TAPCON ANCHORS, INTO THE CONCRETE BLOCK UNIT SHALL BE 1 1/4".

B.2) IN CASE THAT PRECAST STONE, PRECAST CONCRETE PANELS, OR PAVERS BE FOUND ON THE EXISTING WALL OR FLOOR, ANCHORS SHALL BE LONG ENOUGH TO REACH THE MAIN STRUCTURE BEHIND SUCH PANELS.

(C) ANCHORS SHALL BE INSTALLED FOLLOWING ALL OF THE RECOMMENDATIONS AND SPECIFICATIONS OF THE ANCHOR'S MANUFACTURER.

(D) ANCHORS REQUIRED FOR STORM BARS, HEADERS & MULLION CONNECTIONS TO CONCRETE f'c=3 ksi Min. SHALL BE AS SPECIFIED ON APPLICABLE SECTIONS SHOWN ON SHEET 5, 5A, 6, & 7 OF 14 RESPECTIVELY.
POWER BOLTS & CALK-IN ANCHORS TO BE AS MANUFACTURED BY POWERS FASTENERS, INC.
1/4" ø TAPCON ANCHORS, AS MANUFACTURED BY ELCO TEXTRON.
MINIMUM EDGE DISTANCE AND SPACING FOR ABOVE MENTIONED ANCHORS SHALL BE AS INDICATED BELOW OR AT ABOVE MENTIONED SHEET, WHICHEVER IS LARGER (MORE CRITICAL).

| ANCHOR | SPACING | EDGE DISTANCE | EMBEDMENT CONCRETE | EMBEDMENT CONCRETE BLOCK |
|---|---|---|---|---|
| 3/8"ø POWER BOLT | 3 3/4" | 4 1/2" | 2 1/2" (2000 psi) | 1 1/2" |
| 1/4"ø CALK-IN | 2 1/2" | 3" | 7/8" (3000 psi) | 7/8" |
| 3/8"ø CALK-IN | 3 3/4" | 4 1/2" | 1 1/4" (3000 psi) | 1 1/4" |
| 1/4"ø TAPCON | 3" | 2 1/2" | 1 3/4" (3000 psi) | 1 1/4" |
| 1/2"ø POWER BOLT | 5" | 6" | 2 1/2" (2000 psi) | 1 1/2" |

8. IT SHALL BE THE RESPONSIBILITY OF THE CONTRACTOR TO VERIFY THE SOUNDNESS OF THE STRUCTURE WHERE SHUTTER IS TO BE ATTACHED TO INSURE PROPER ANCHORAGE.

9. SHUTTER MANUFACTURER'S STAMP LABEL BE PLACED ON THE EXPOSED SURFACE OF THE SIDE RAIL APPROXIMATELY 4" ABOVE THE BOTTOM OF SUCH RAIL. LABEL SHALL READ AS FOLLOWS:
**WEST PALM INSTALLERS, INC.**
DORAL, FL.
MIAMI-DADE COUNTY PRODUCT CONTROL APPROVED.

10. ROLL-UP MECHANISM NOT PART OF THIS APPROVAL, BUT SHALL BE CERTIFIED BY AN INDEPENDENT TESTING AGENCY.

11. (A) THIS (P.A.D.) PREPARED BY THIS ENGINEER IS GENERIC AND DOES NOT PROVIDE INFORMATION FOR A SITE SPECIFIC PROJECT; i.e. WHERE THE SITE CONDITIONS DEVIATE FROM THE P.A.D.

(B) CONTRACTOR TO BE RESPONSIBLE FOR THE SELECTION, PURCHASE AND INSTALLATION INCLUDING LIFE SAFETY OF THIS PRODUCT, BASED ON THIS PRODUCT P.A.D. PROVIDED HE/SHE DOES NOT DEVIATE FROM THE CONDITIONS DETAILED ON THIS DOCUMENT. CONSTRUCTION SAFETY AT SITE IS THE CONTRACTOR'S RESPONSIBILITY.

(C) THIS PRODUCT APPROVAL DOCUMENT WILL BE CONSIDERED INVALID IF ALTERED BY ANY MEANS.

(D) SITE SPECIFIC PROJECTS SHALL BE PREPARED BY A FLORIDA REGISTERED ENGINEER OR ARCHITECT WHICH WILL BECOME THE ENGINEER OF RECORD (E.O.R) FOR THE PROJECT AND WHO WILL BE RESPONSIBLE FOR THE PROPER USE OF THE P.A.D.

(E) THIS P.A.D. SHALL COMPLY WITH SECTION 2: 61G15 OF THE FLORIDA ADMINISTRATIVE CODE.

12. ONCE ALL COMPONENTS HAVE BEEN CHOSEN, CHECK FOR COMPLIANCE WITH SECTION 1613.1.9 OF THE FLORIDA BUILDING CODE 2004.

Approved in complying with the Florida Building Code
Date 01/14/06
NOA# 06-0710.02
Miami-Dade Product Control Division
By

F.BC. (High Velocity Hurricane Zone)

JUN 19 2006

TILTECO INC.
TILLIT TESTING & ENGINEERING COMPANY
6355 N.W. 36th. St., Ste. 305 - VIRGINIA GARDENS, FL 33166
Phone : (305)871-1530 . Fax : (305)871-1531
EB-0006719
WALTER A. TILLIT Jr., P. E.
FLORIDA Lic. # 44167

ASSA/60mm BERTHA ROLL-UP

**WEST PALM INSTALLERS, INC.**
(ASSA # 332)
6819 NW 84TH AVENUE
DORAL, FL. 33166
PH.:(305)406-3575, FAX:(305)406-3576

| REV. No | DESCRIPTION | DATE | REV. No | DESCRIPTION | DATE |
|---|---|---|---|---|---|
| 1 | - | - | 3 | | |
| 2 | - | - | 4 | | |

DRAWN BY: S.M.
6/16/06 DATE
06-160 DRAWING No
SHEET 1 OF 14

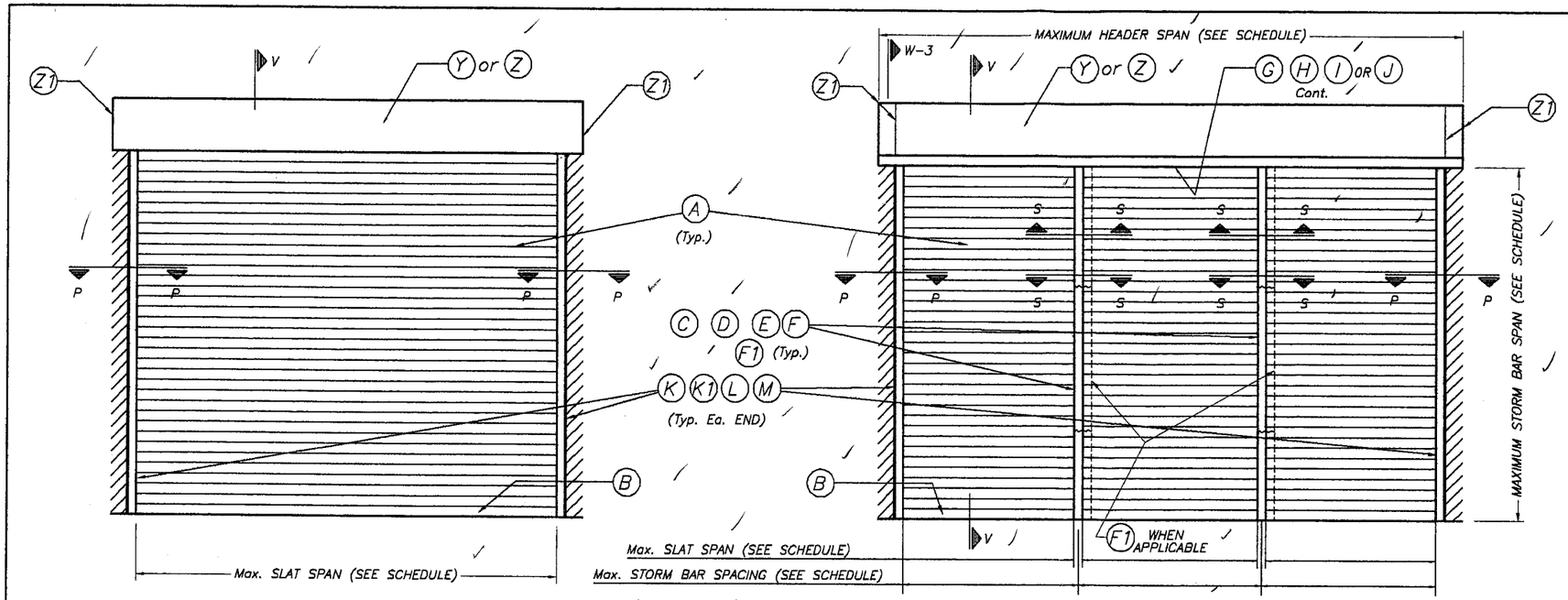


**TYPICAL SINGLE UNIT ELEVATION (NO STORM BARS REQUIRED)**

NOTE: SEE SHEET 2 & 3 OF 14 FOR COMPONENTS NOMENCLATURE.




**TYPICAL MULTIPLE UNIT ELEVATION (STORM BARS REQUIRED)**

NOTE: SEE SHEET 2 & 3 OF 14 FOR COMPONENTS NOMENCLATURE.

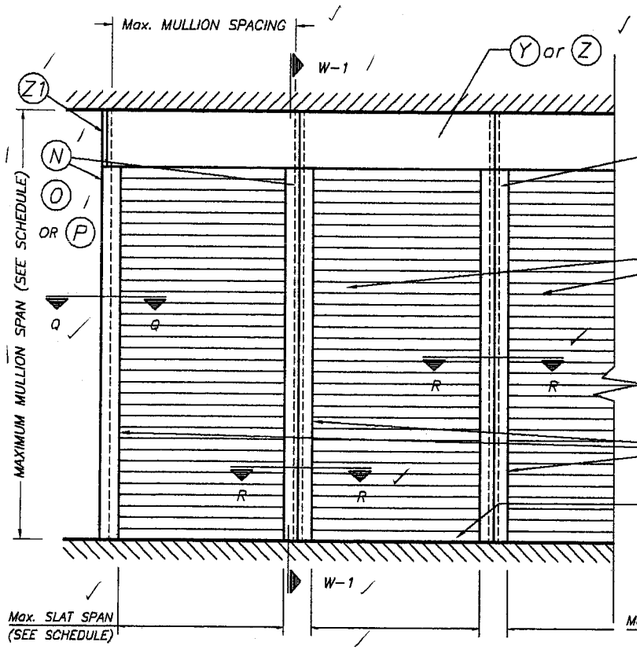


**TYPICAL CONSECUTIVE SINGLE UNIT ELEVATION (NO STORM BARS REQUIRED)**

NOTE: SEE SHEET 2 & 3 OF 14 FOR COMPONENTS NOMENCLATURE.

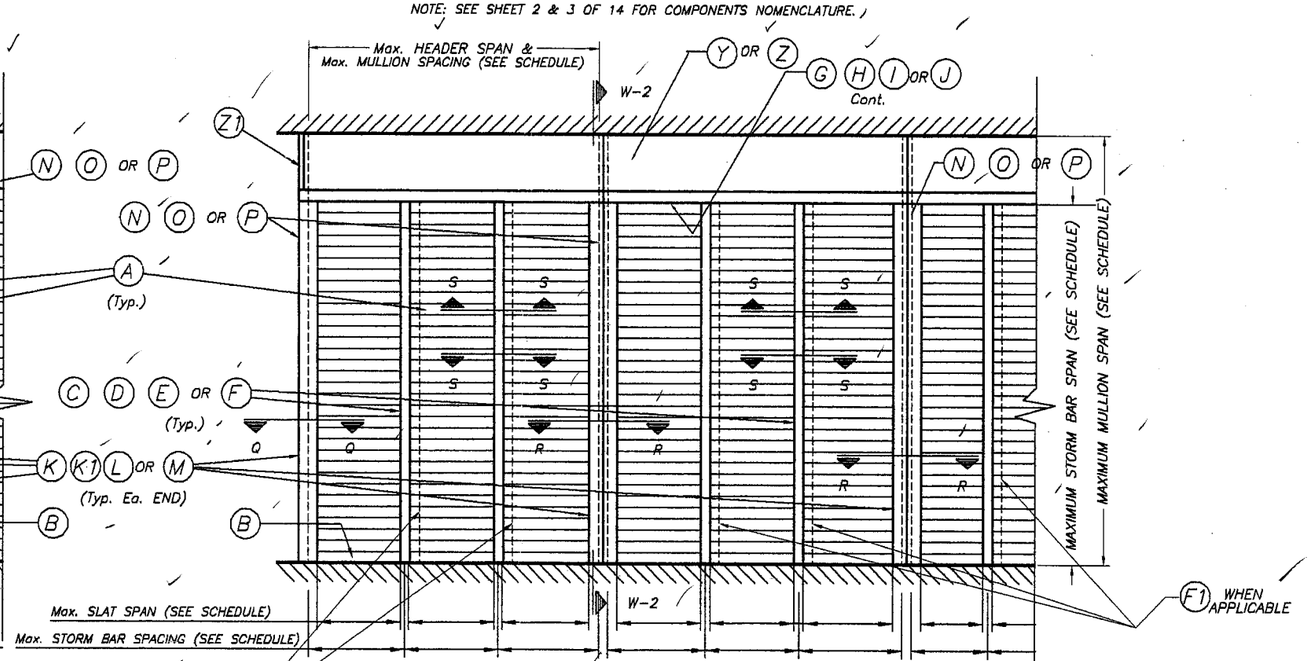


**TYPICAL CONSECUTIVE MULTIPLE UNIT ELEVATION (STORM BARS REQUIRED)**

NOTE: SEE SHEET 2 & 3 OF 14 FOR COMPONENTS NOMENCLATURE.

NOTE:
SEE SECTIONS ON
SHEET 4 THRU 7.

09/14/06
06-0710.02

F.BC. (High Velocity Hurricane Zone)

JUN 19 2006

TILTECO INC.
TILLIT TESTING & ENGINEERING COMPANY
6355 N.W. 36th. St., Ste. 305 – VIRGINIA GARDENS, FL. 33166
Phone : (305)871-1530 . Fax : (305)871-1531
EB-0006719
WALTER A. TILLIT Jr., P. E.
FLORIDA Lic. # 44167

ASSA/60mm BERTHA ROLL-UP

**WEST PALM INSTALLERS, INC.**
(ASSA # 332)
6819 NW 84TH AVENUE
DORAL, FL. 33166
PH.:(305)406-3575, FAX:(305)406-3576

| REV. No | DESCRIPTION | DATE | REV. No | DESCRIPTION | DATE |
|---|---|---|---|---|---|
| 1 | – | – | 3 | | |
| 2 | | | 4 | | |

DRAWN BY: S.M.
6/16/06 DATE
06-160 DRAWING No
SHEET 1A OF 14

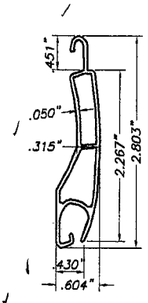


**(A) TYPE 1 SLAT:**
EXTRUDED ALUMINUM SLAT
6063-T6 ALUMINUM ALLOY
SCALE: 1/2" = 1"

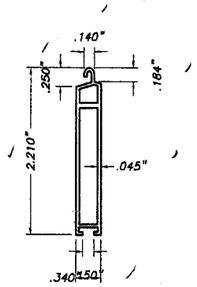


**(B) TYPE 2 SLAT:**
EXTRUDED ALUMINUM BOTTOM SLAT
6063-T6 ALUMINUM ALLOY
SCALE: 1/2" = 1"

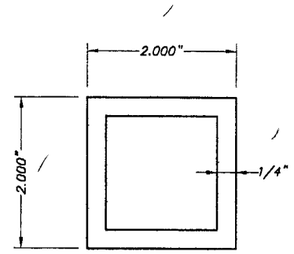


**(C) TYPE 1 STORM BAR:**
2" EXTRUDED STORM BAR
6063-T6 ALUMINUM ALLOY
SCALE: 1/2" = 1"

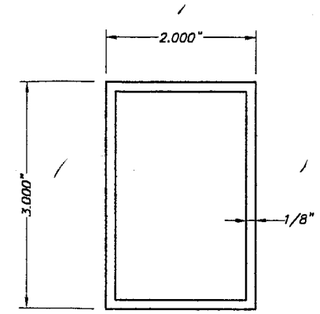


**(D) TYPE 2 STORM BAR:**
3" EXTRUDED STORM BAR
6063-T6 ALUMINUM ALLOY
SCALE: 1/2" = 1"

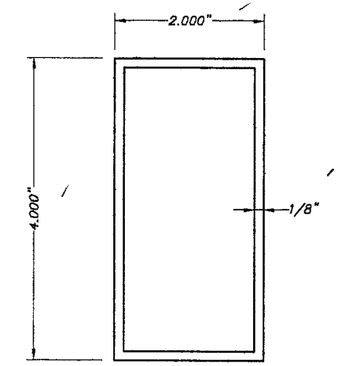


**(E) TYPE 3 STORM BAR:**
4" EXTRUDED STORM BAR
6063-T6 ALUMINUM ALLOY
SCALE: 1/2" = 1"

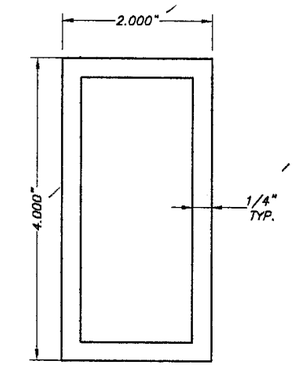


**(F) TYPE 4 STORM BAR:**
4" HEAVY EXTRUDED STORM BAR
6063-T6 ALUMINUM ALLOY
SCALE: 1/2" = 1"

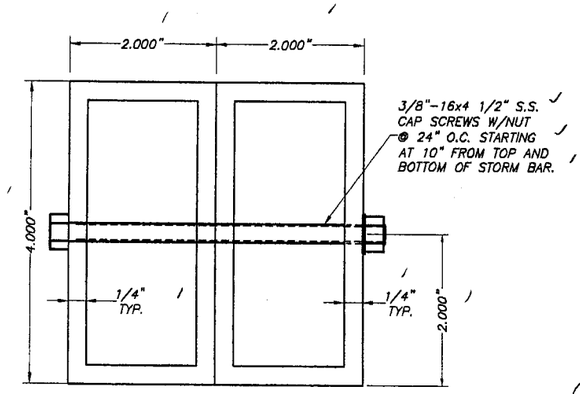


**(F1) TYPE 5 STORM BAR:**
4" HEAVY EXTRUDED STORM BAR
6063-T6 ALUMINUM ALLOY
SCALE: 1/2" = 1"

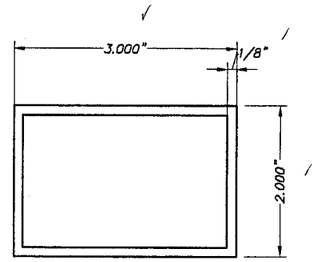


**(G) HEADER TYPE 1:**
6063-T6 ALUMINUM ALLOY
SCALE: 1/2" = 1"

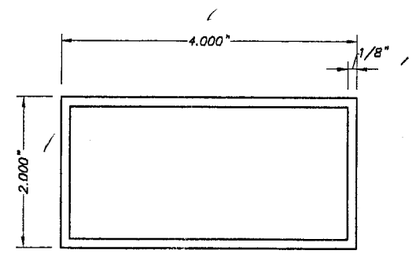


**(H) HEADER TYPE 2:**
6063-T6 ALUMINUM ALLOY
SCALE: 1/2" = 1"

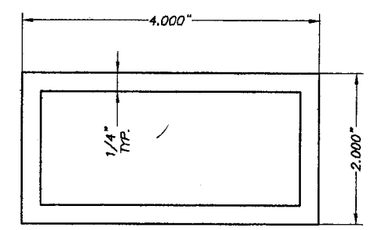


**(I) HEADER TYPE 3:**
6063-T6 ALUMINUM ALLOY
SCALE: 1/2" = 1"

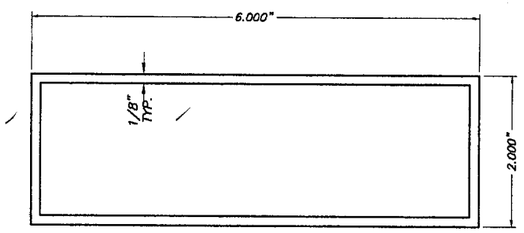


**(J) HEADER TYPE 4:**
6063-T6 ALUMINUM ALLOY
SCALE: 1/2" = 1"

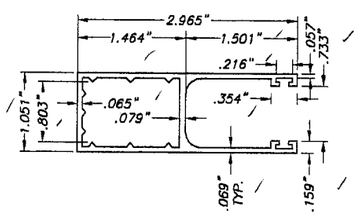


**(K) TYPE 1 SIDE RAIL:**
6063-T6 Alum. ALLOY
SCALE: 1/2" = 1"

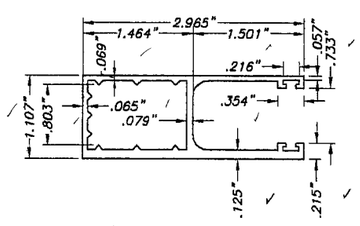


**(K1) TYPE 2 SIDE RAILS:**
6063-T6 Alum. ALLOY
SCALE: 1/2" = 1"

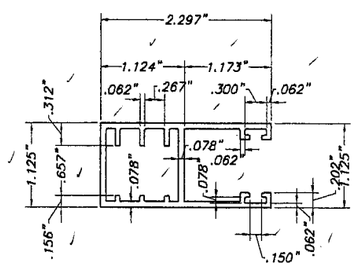


**(L) TYPE 3 SIDE RAIL:**
6063-T6 Alum. ALLOY
SCALE: 1/2" = 1"

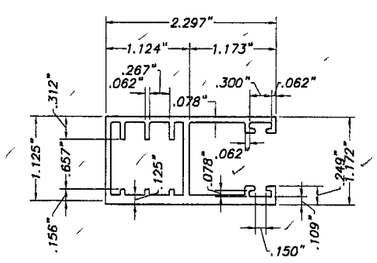


**(M) TYPE 4 SIDE RAIL:**
6063-T6 Alum. ALLOY
SCALE: 1/2" = 1"

09/14/06
06-071002

F.BC. (High Velocity Hurricane Zone)

JUN 19 2006

TILTECO INC.
TILLIT TESTING & ENGINEERING COMPANY
6355 N.W. 36th. St., Ste. 305 - VIRGINIA GARDENS, FL 33166
Phone : (305)871-1530 . Fax : (305)871-1531
EB-0006719
WALTER A. TILLIT Jr., P. E.
FLORIDA Lic. # 44167

ASSA/60mm BERTHA ROLL-UP

**WEST PALM INSTALLERS, INC.**
(ASSA # 332)
6819 NW 84TH AVENUE
DORAL, FL. 33166
PH.:(305)406-3575, FAX:(305)406-3576

| REV. No | DESCRIPTION | DATE | REV. No | DESCRIPTION | DATE |
|---|---|---|---|---|---|
| 1 | - | - | 3 | | |
| 2 | | | 4 | | |

DRAWN BY: S.M.
6/16/06 DATE
06-160 DRAWING No
SHEET 2 OF 14

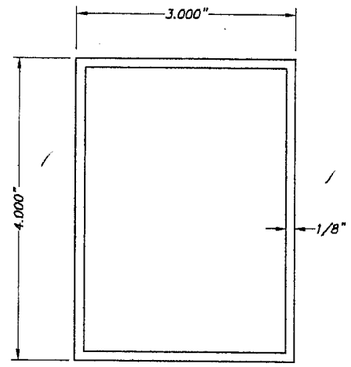


**(N) TYPE 1 MULLION:**
4" EXTRUDED MULLION
6063-T6 ALUMINUM ALLOY
SCALE: 1/2" = 1"

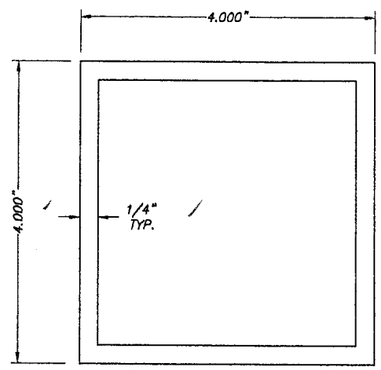


**(O) TYPE 2 MULLION:**
4" EXTRUDED MULLION
6063-T6 ALUMINUM ALLOY
SCALE: 1/2" = 1"

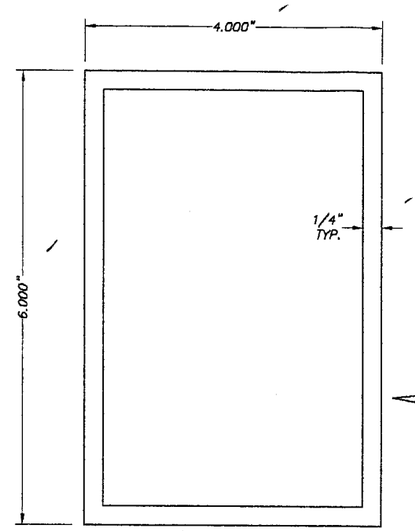


**(P) TYPE 3 MULLION:**
6" EXTRUDED MULLION
6063-T6 ALUMINUM ALLOY
SCALE: 1/2" = 1"

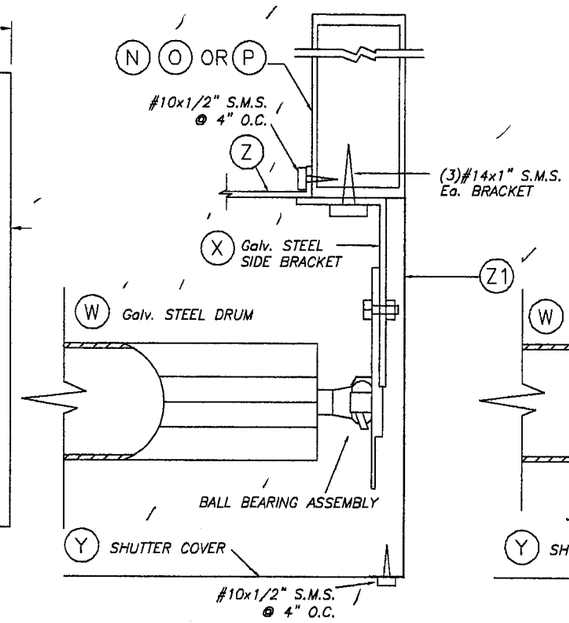


**BRACKET DETAIL 1A**

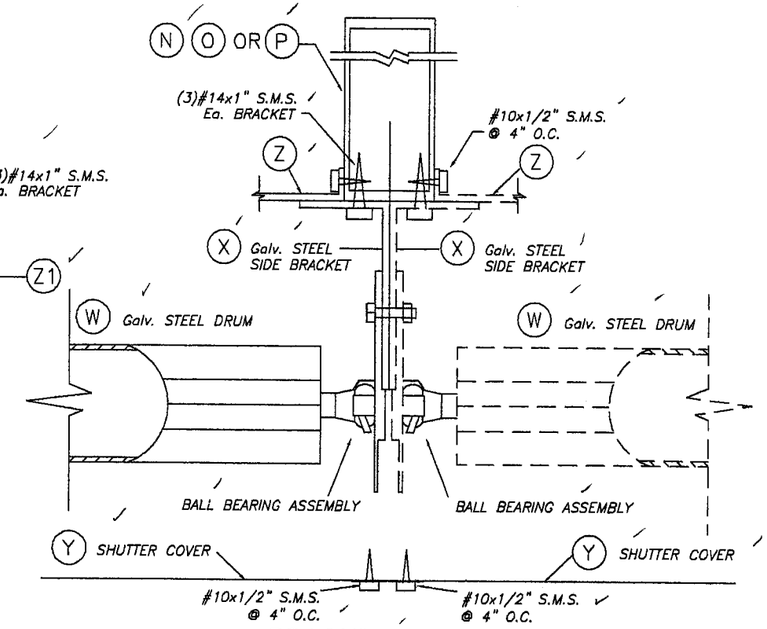


**BRACKET DETAIL 2**

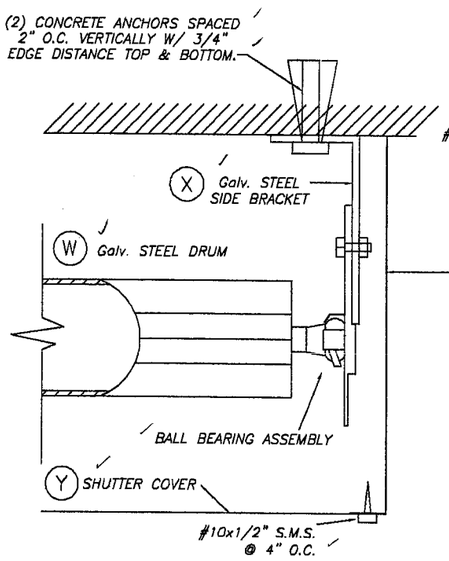


**BRACKET DETAIL 1**

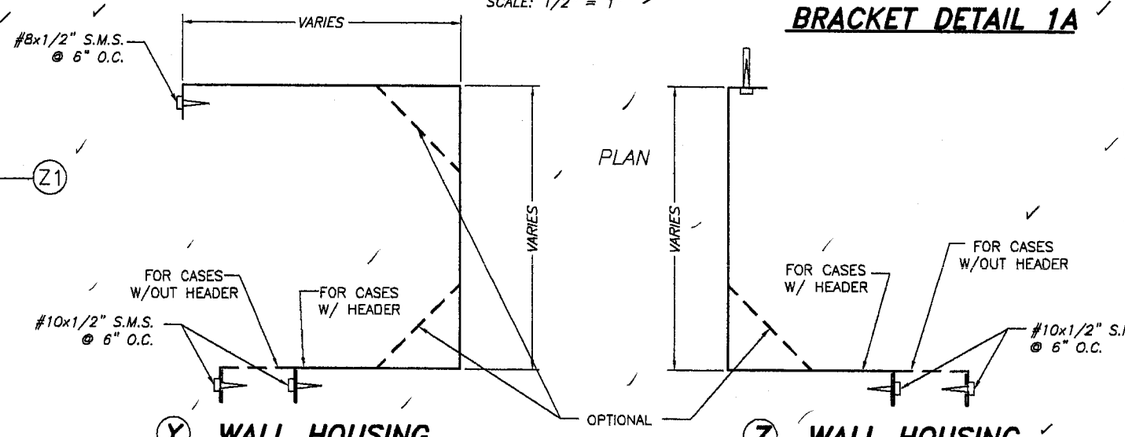


**(Y) WALL HOUSING**
SCALE: 3/16" = 1"
3105-H14 ALUMINUM ALLOY
THICKNESS: .032"

**(Z) WALL HOUSING**
SCALE: 3/16" = 1"
3105-H14 ALUMINUM ALLOY
THICKNESS: .032"

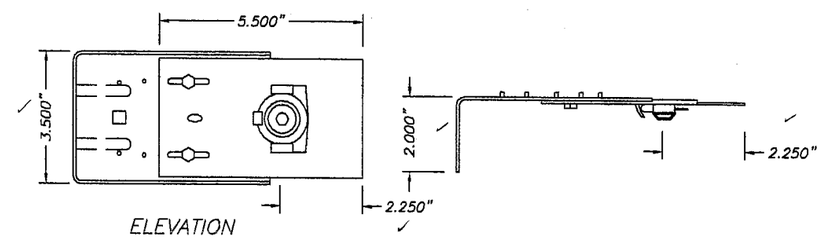


**(X) SIDE BRACKET** SCALE: 1/4" = 1"
1010 ELITE ROLLED STEEL F. E.
P. O. 1 Z 200 DESIGNATION
Ftu= 410 NW/MM2. % OF STRETCH
MINIMAL ON TEST. BAR OF 80 MM: 24 %
G-90 GALVANIZED COATING Thk.: .060"

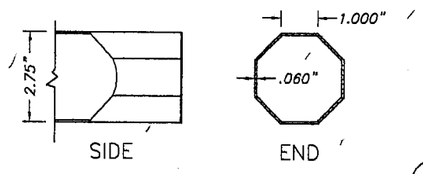


**(W) DRUM** SCALE: 1/4" = 1"
1010 ELITE ROLLED STEEL F. E.
P. O. 1 Z 200 DESIGNATION
Ftu= 410 NW/MM2. % OF STRETCH
MINIMAL ON TEST. BAR OF 80 MM: 24 %
G-90 GALVANIZED COATING Thk.: .060"

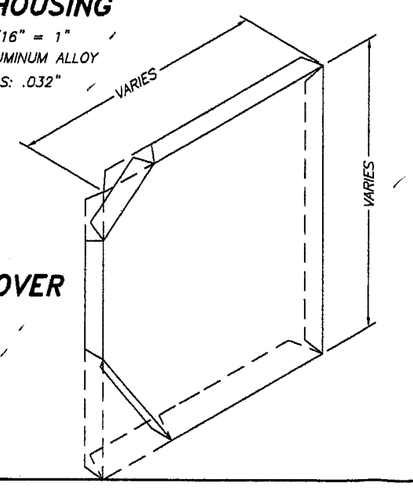


**(Z1) SHUTTER SIDE COVER**
SCALE: 3/16" = 1"
3105-H14 ALUMINUM ALLOY
THICKNESS: .032"

# END BRACKET SYSTEM

* SEE NOTE 10 ON SHEET 1 OF 14

09/14/06
06-0710.02

F.BC. (High Velocity Hurricane Zone)

JUN 19 2006

TILTECO INC.
TILLIT TESTING & ENGINEERING COMPANY
6355 N.W. 36th. St., Ste. 305 - VIRGINIA GARDENS, Fl. 33166
Phone : (305)871-1530 . Fax : (305)871-1531
EB-0006719
WALTER A. TILLIT Jr., P. E.
FLORIDA Lic. # 44167

ASSA/60mm BERTHA ROLL-UP

**WEST PALM INSTALLERS, INC.**
(ASSA # 332)
6819 NW 84TH AVENUE
DORAL, FL. 33166
PH.:(305)406-3575, FAX:(305)406-3576

| REV. No | DESCRIPTION | DATE | REV. No | DESCRIPTION | DATE |
|---|---|---|---|---|---|
| 1 | - | - | 3 | | |
| 2 | | | 4 | | |

DRAWN BY: S.M.
6/16/06 DATE
06-160 DRAWING No
SHEET 3 OF 14

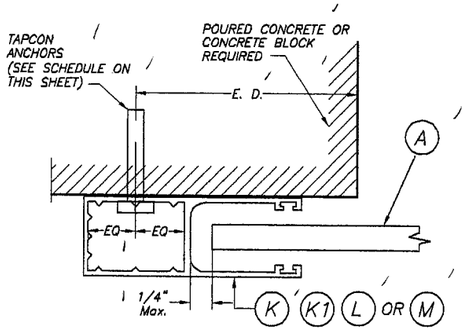


**SECTION P – P (1) : WALL MOUNT**

SCALE: 1/2" = 1"

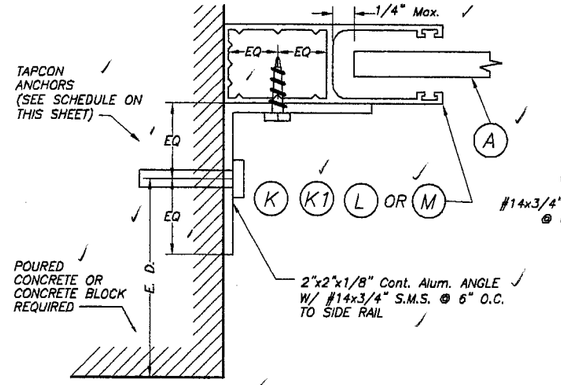


**SECTION P – P (2) : SIDE WALL MOUNT**

SCALE: 1/2" = 1"

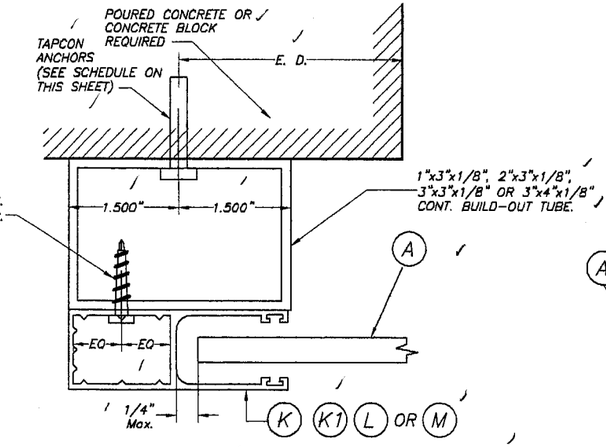


**SECTION P – P (3) : BUILD-OUT MOUNT**

SCALE: 1/2" = 1"

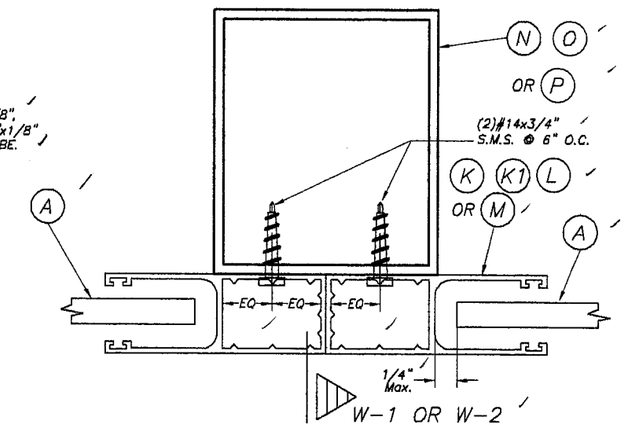


**SECTION R – R : MULLION MOUNT (FACE MOUNT)**

SCALE: 1/2" = 1"

## SIDE RAIL ANCHOR SCHEDULE

## MAXIMUM DESIGN PRESSURE RATING "W" (p. s. f.) AND CORRESPONDING MAXIMUM ANCHOR SPACING(in) * FOR SIDE RAILS (K), (K1), (L) & (M) CONNECTION TO POURED CONCRETE OR MASONRY WALL.

(USE MAXIMUM VALUES BETWEEN POSITIVE AND NEGATIVE LOAD)

| MAXIMUM DESIGN LOAD "W" (p.s.f.) | SIDE RAIL (K) | | | SIDE RAIL (K1) | | | SIDE RAIL (L) | | | SIDE RAIL (M) | | |
|---|---|---|---|---|---|---|---|---|---|---|---|---|
| | WALL MOUNT | INSIDE MOUNT | BUILD-OUT MOUNT | WALL MOUNT | INSIDE MOUNT | BUILD-OUT MOUNT | WALL MOUNT | INSIDE MOUNT | BUILD-OUT MOUNT | WALL MOUNT | INSIDE MOUNT | BUILD-OUT MOUNT |
| 80 OR LESS | 6" | 4" | 6" | 6" | 4" | 6" | 6" | 5" | 6" | 6" | 5" | 6" |
| | 6" | 6" | 6" | 6" | 6" | 6" | 6" | 6" | 6" | 6" | 6" | 6" |
| >80 TO 150 | 3 1/2" | 2 1/2" | 5" | 3 1/2" | 2 1/2" | 5 1/2" | 5" | 3 1/2" | 6" | 5" | 3 1/2" | 6" |
| | 6" | 6" | 6" | 6" | 6" | 6" | 6" | 6" | 6" | 6" | 6" | 6" |
| >150 TO 195 | 3" | 2 1/2" | 5" | 3" | 2 1/2" | 5" | 4" | 3" | 6" | 4" | 3" | 6" |
| | 6" | 5 1/2" | 6" | 6" | 6" | 6" | 6" | 6" | 6" | 6" | 6" | 6" |

| MASONRY |
|---|
| POURED CONCRETE |

**SUBSTRATE LEGEND**

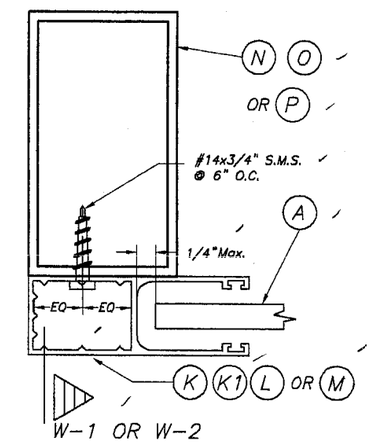


**SECTION Q – Q : MULLION MOUNT (FACE MOUNT)**

SCALE: 1/2" = 1"

## * MAXIMUM ANCHOR SPACING (in.) AT SIDE RAILS VERSUS EDGE DISTANCE = E. D.

MAXIMUM SIDE RAILS ANCHOR SPACING ARE VALID FOR 3 1/2" EDGE DISTANCE. FOR E. D. LESS THAN 3 1/2", REDUCE ANCHOR SPACING BY MULTIPLYING SPACING SHOWN ON SCHEDULE BY THE FOLLOWING FACTORS (REDUCED SPACING OBTAINED USING FACTORS SHALL NOT BE LESS THAN 3"):

| ACTUAL E. D. | FACTOR |
|---|---|
| 3" | .86 |
| 2 1/2" | .75 |
| 2" | .50 |

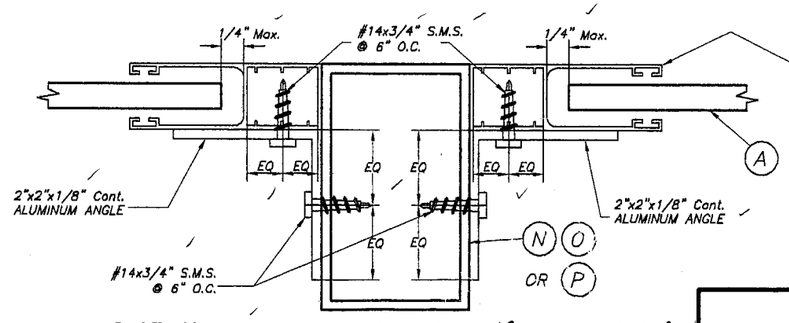


**SECTION R – R : MULLION MOUNT (INSIDE MOUNT)**

SCALE: 1/2" = 1"

09/14/06
06-0710.02

F.BC. (High Velocity Hurricane Zone)

JUN 19 2006


TILTECO INC.
TILLIT TESTING & ENGINEERING COMPANY
6355 N.W. 36th. St., Ste. 305 – VIRGINIA GARDENS, Fl. 33166
Phone : (305)871-1530 . Fax : (305)871-1531
EB-0006719
WALTER A. TILLIT Jr., P. E.
FLORIDA Lic. # 44167


ASSA/60mm BERTHA ROLL-UP


**WEST PALM INSTALLERS, INC.**
(ASSA # 332)
6819 NW 84TH AVENUE
DORAL, FL. 33166
PH.:(305)406-3575, FAX:(305)406-3576


| REV. No | DESCRIPTION | DATE | REV. No | DESCRIPTION | DATE |
|---|---|---|---|---|---|
| 1 | – | – | 3 | | |
| 2 | | | 4 | | |

DRAWN BY: S.M.

6/16/06 DATE

06-160 DRAWING No

SHEET 4 OF 14

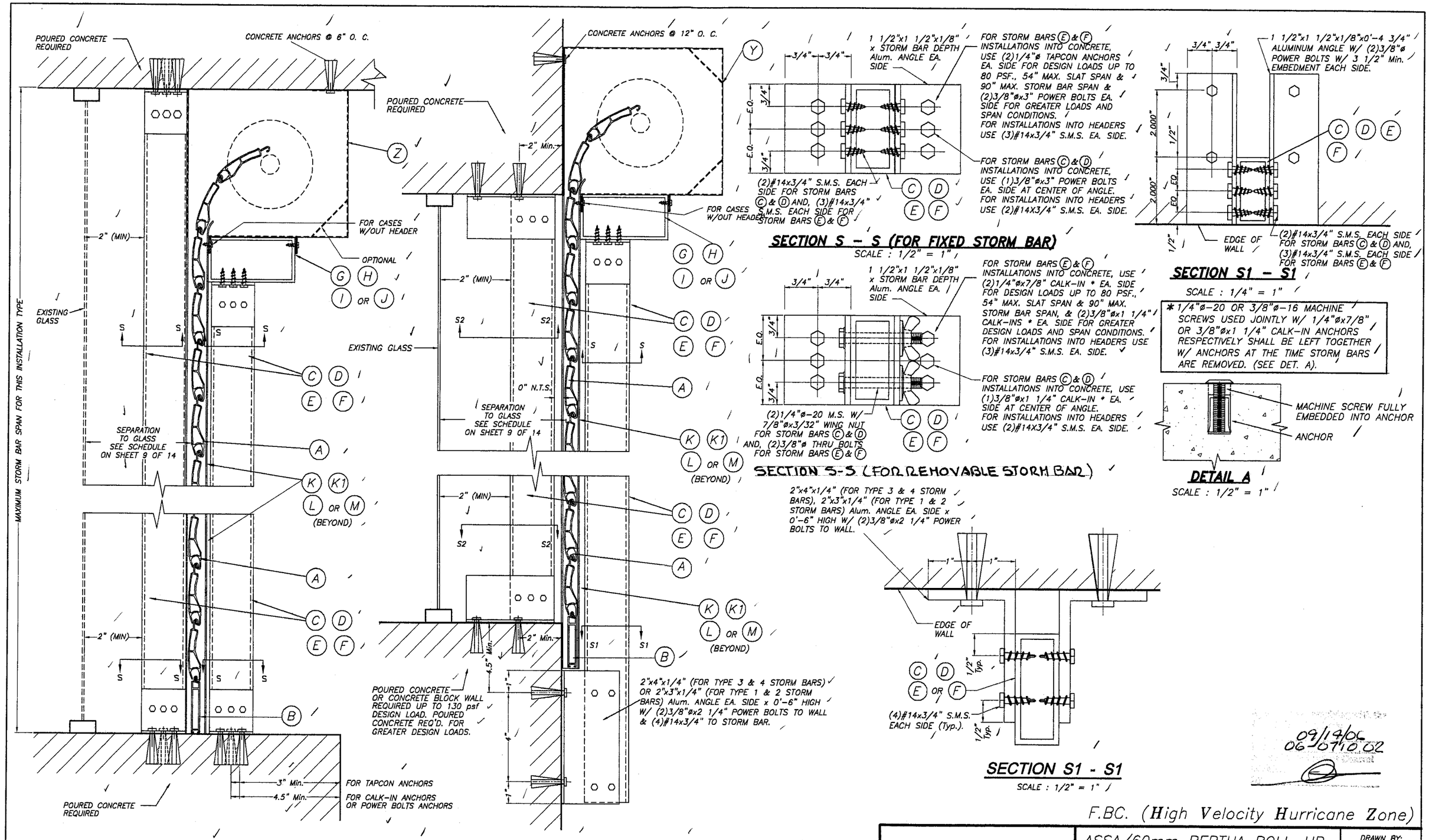


09/14/06
06-0710.02

F.BC. (High Velocity Hurricane Zone)

**CEILING & FLOOR MOUNTING: SECTION V-V(2) INSTALLATION W/ FIXED OR REMOVABLE STORM BARS W/CONCRETE ANCHORS**

( SEE SECTION "S" FOR ANCHOR TYPE REQUIREMENT)

SCALE : N.T.S.

SINGLE SPAN SECTIONS AND DETAILS ARE SIMILAR TO ABOVE SHOWN WITHOUT STORM BAR & HEADERS.

**WALL MOUNTING: SECTION V-V(1) INSTALLATION STORM BARS W/CONCRETE ANCHORS**

SCALE : N.T.S.

## SECTION V - V

JUN 19 2006

TILTECO INC.
TILLIT TESTING & ENGINEERING COMPANY
6355 N.W. 36th. St., Ste. 305 – VIRGINIA GARDENS, FL 33166
Phone : (305)871-1530 . Fax : (305)871-1531
EB-0006719
WALTER A. TILLIT Jr., P. E.
FLORIDA Lic. # 44167

ASSA/60mm BERTHA ROLL-UP

**WEST PALM INSTALLERS, INC.**
(ASSA # 332)
6819 NW 84TH AVENUE
DORAL, FL. 33166
PH.:(305)406-3575, FAX:(305)406-3576

| REV. No | DESCRIPTION | DATE | REV. No | DESCRIPTION | DATE |
|---|---|---|---|---|---|
| 1 | – | – | 3 | | |
| 2 | | | 4 | | |

DRAWN BY: S.M.
6/16/06 DATE
06-160 DRAWING No
SHEET 5 OF 14

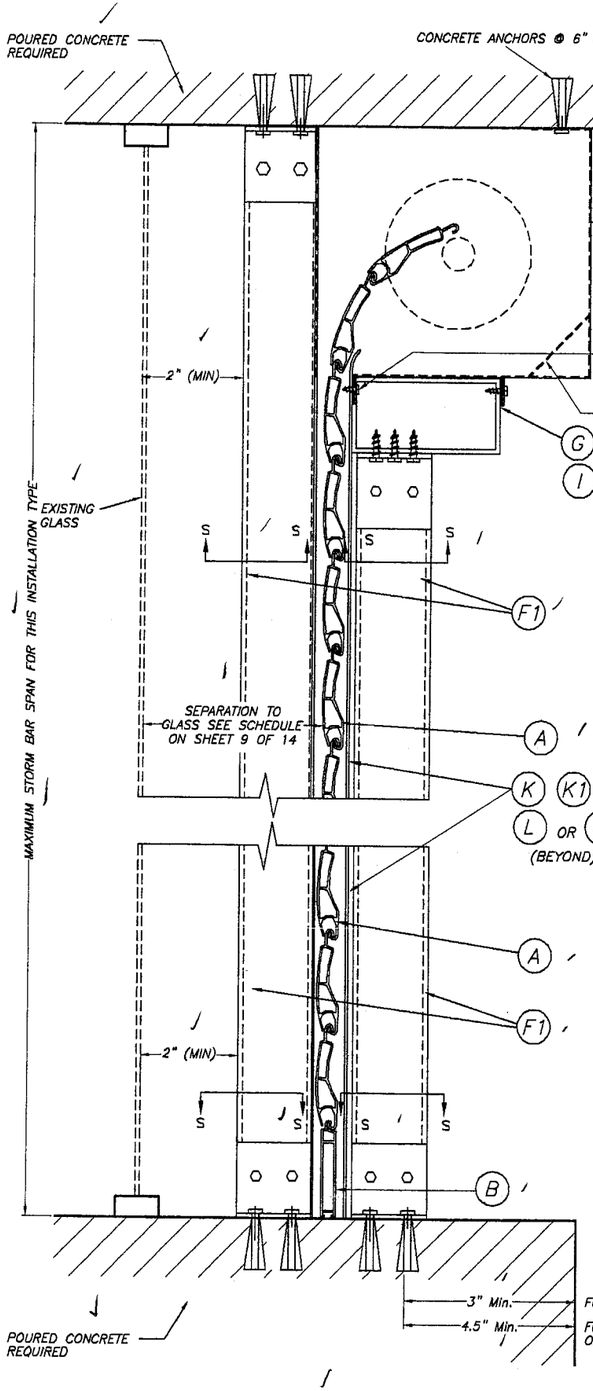


**CEILING & FLOOR MOUNTING: SECTION V-V (2) INSTALLATION W/ FIXED OR REMOVABLE STORM BARS W/CONCRETE ANCHORS**

**( SEE SECTION "S" FOR ANCHOR TYPE REQUIREMENT)**

SCALE : N.T.S.

SINGLE SPAN SECTIONS AND DETAILS ARE SIMILAR TO ABOVE SHOWN WITHOUT STORM BAR & HEADERS.

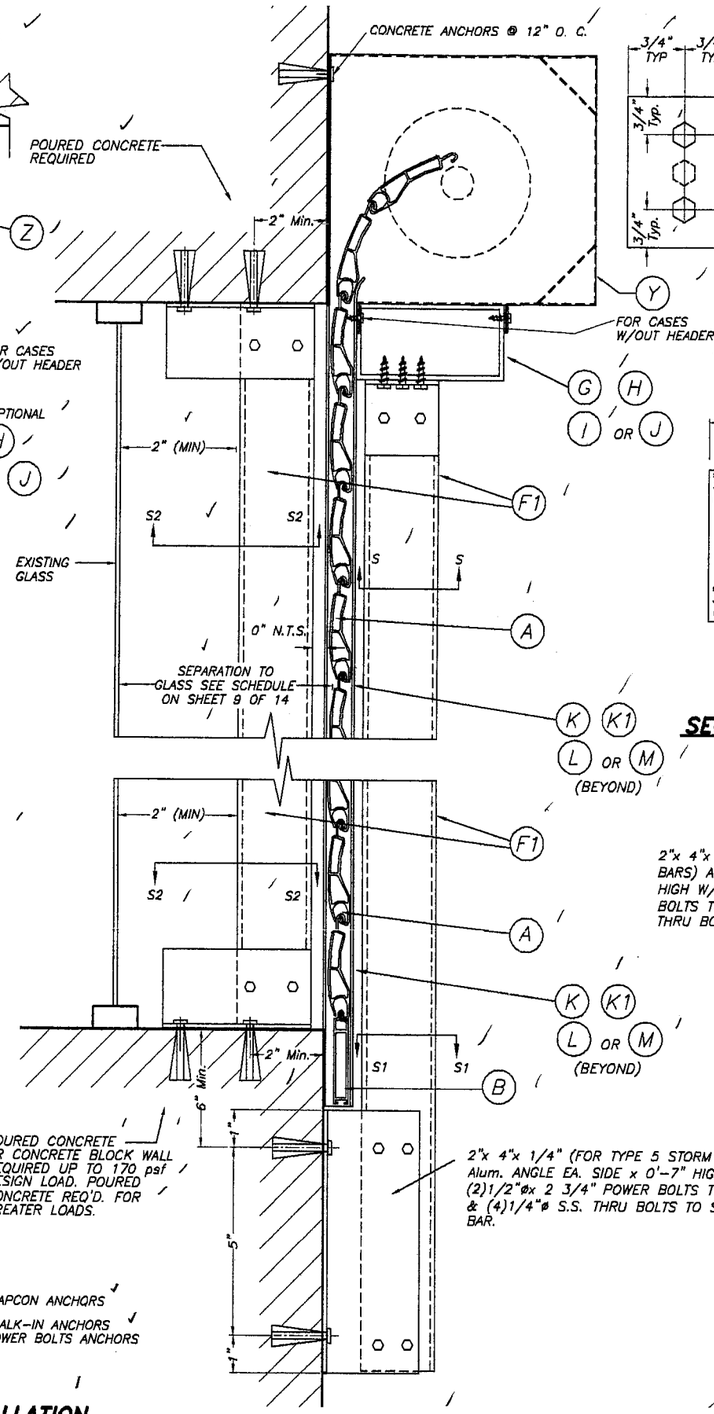


**WALL MOUNTING: SECTION V-V (1) INSTALLATION W/FIXED STORM BARS W/CONCRETE ANCHORS**

SCALE : N.T.S.

**SECTION V - V**

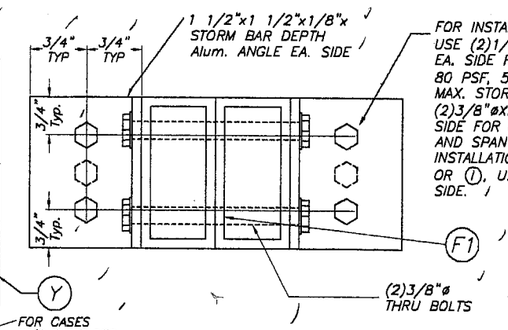


**SECTION S - S (FOR FIXED STORM BAR)**

SCALE : 1/2" = 1"

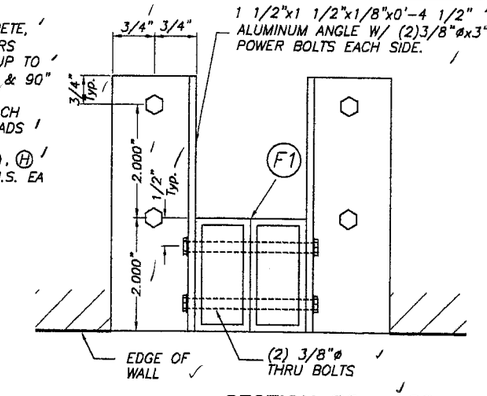


**SECTION S2 - S2**

SCALE : 1/4" = 1"

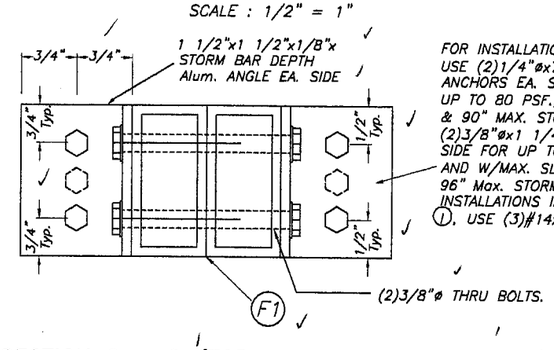


**SECTION S - S (FOR REMOVABLE STORM BAR)**

SCALE : 1/2" = 1"

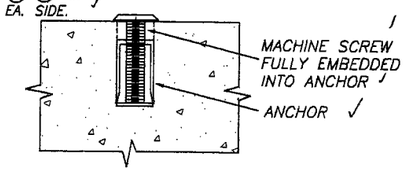


**DETAIL A**

SCALE : 1/2" = 1"

* 1/4"ø-20 OR 3/8"ø-16 MACHINE SCREWS USED JOINTLY W/ 1/4"øx7/8" OR 3/8"øx1 1/4" CALK-IN ANCHORS RESPECTIVELY SHALL BE LEFT TOGETHER W/ ANCHORS AT THE TIME STORM BARS ARE REMOVED. (SEE DET. A).

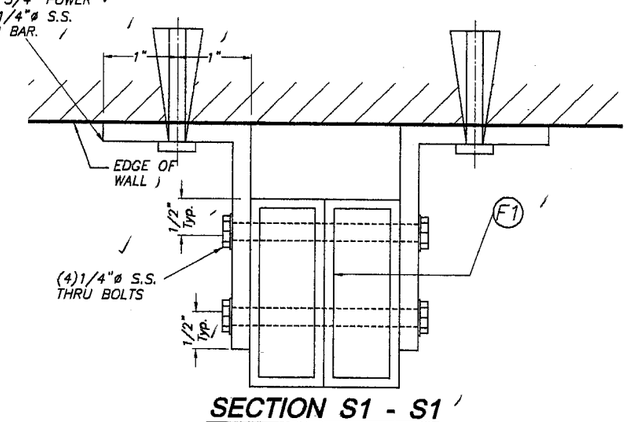


**SECTION S1 - S1**

SCALE : 1/2" = 1"

09/14/06
06-07-10-02

F.BC. (High Velocity Hurricane Zone)

JUN 19 2006

TILTECO INC.
TILLIT TESTING & ENGINEERING COMPANY
6355 N.W. 36th. St., Ste. 305 - VIRGINIA GARDENS, FL. 33166
Phone : (305)871-1530 . Fax : (305)871-1531
EB-0008719
WALTER A. TILLIT Jr., P. E.
FLORIDA Lic. # 44167

ASSA/60mm BERTHA ROLL-UP

**WEST PALM INSTALLERS, INC.**
(ASSA # 332)
6819 NW 84TH AVENUE
DORAL, FL. 33166
PH.:(305)406-3575, FAX:(305)406-3576

| REV. No | DESCRIPTION | DATE | REV. No | DESCRIPTION | DATE |
|---|---|---|---|---|---|
| 1 | - | - | 3 | | |
| 2 | | | 4 | | |

DRAWN BY: S.M.
6/16/06 DATE
06-160 DRAWING No
SHEET 5A OF 14

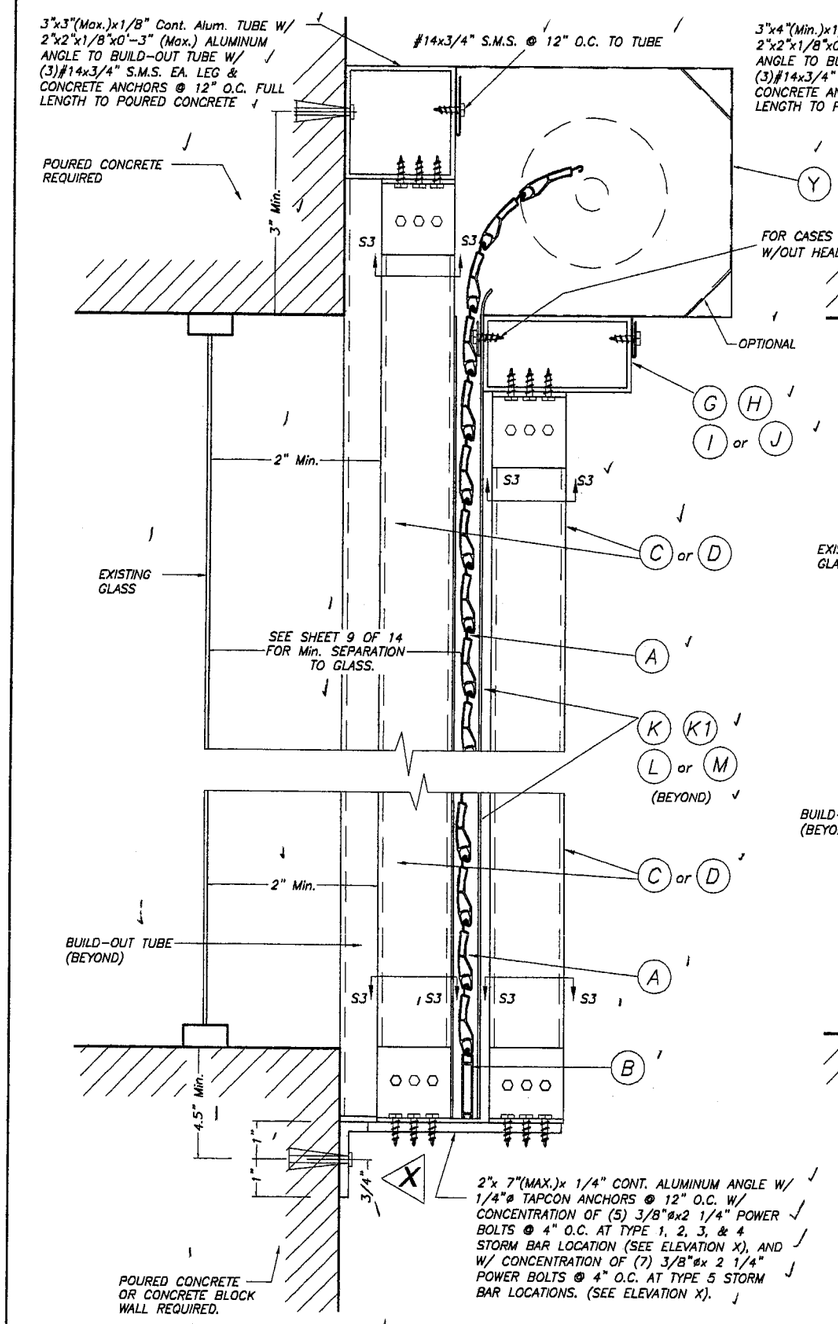


## CASE I

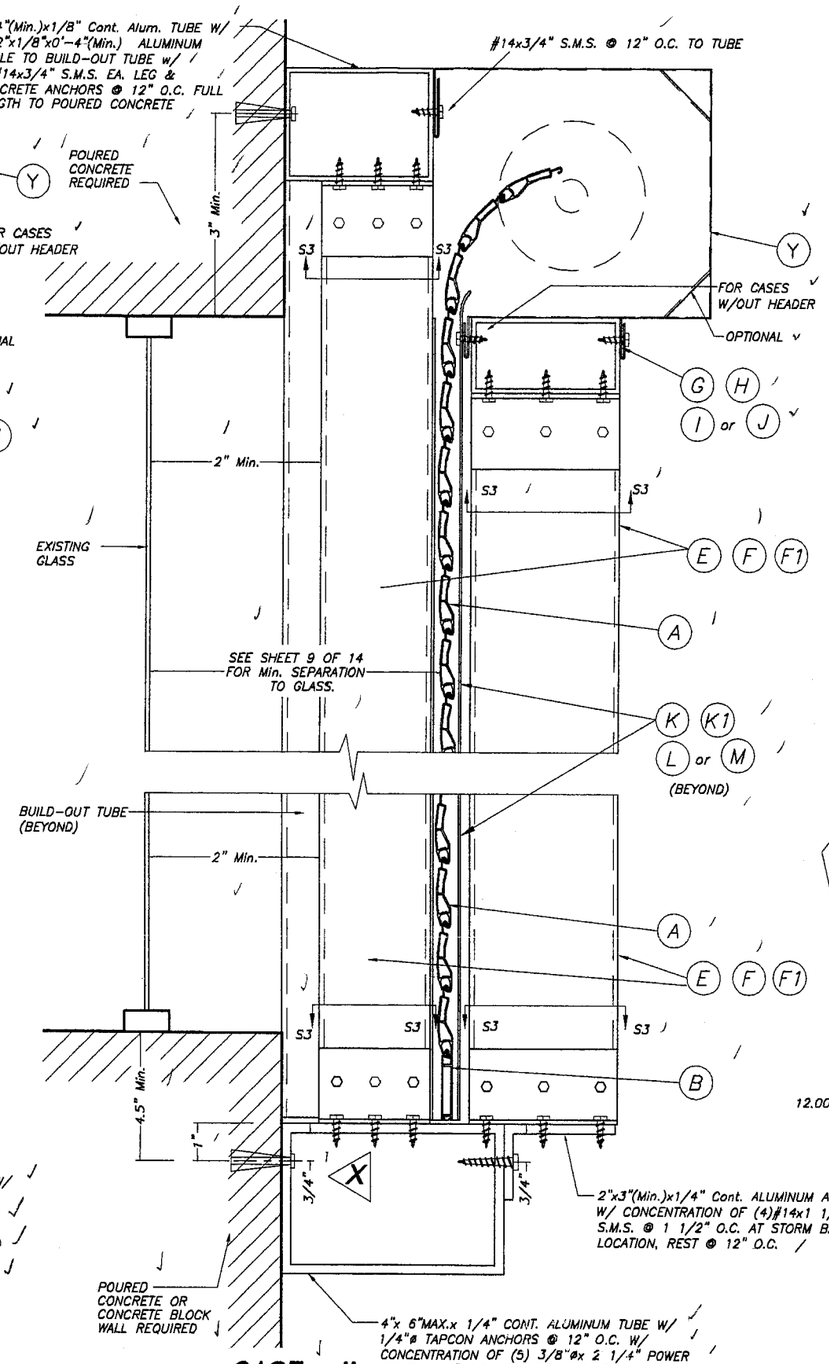


## CASE II

## FIXED STORM BAR CONNECTION AT BUILD-OUT INSTALLATIONS W/SHEET METAL SCREWS

SCALE : 1/4" = 1"

## SECTION V – V

NOTE:
SINGLE SPAN SECTIONS AND DETAILS ARE SIMILAR TO ABOVE SHOWN WITHOUT STORM BAR & HEADERS.

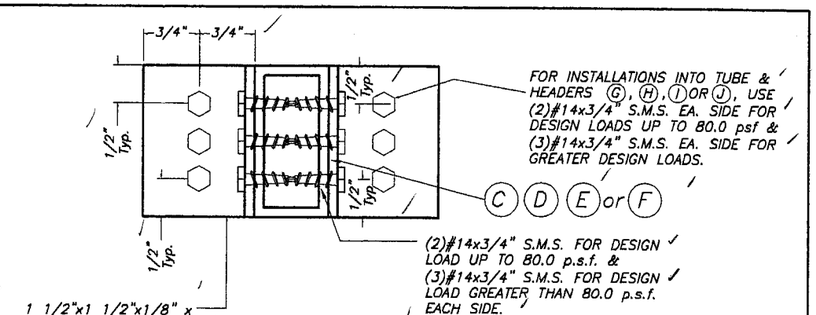


## SECTION S3 – S3

SCALE : 1/2" = 1"

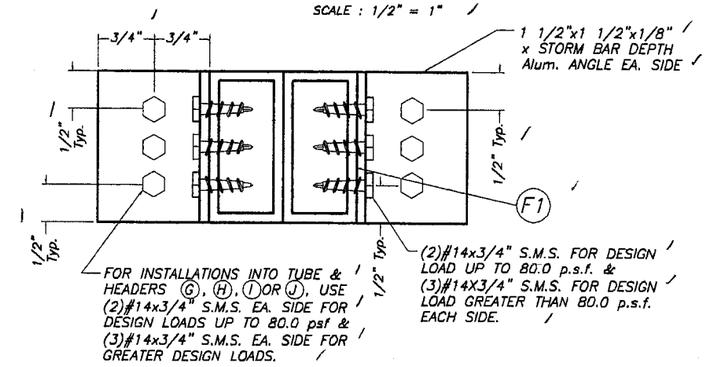


## SECTION S3 – S3

SCALE : 1/2" = 1"

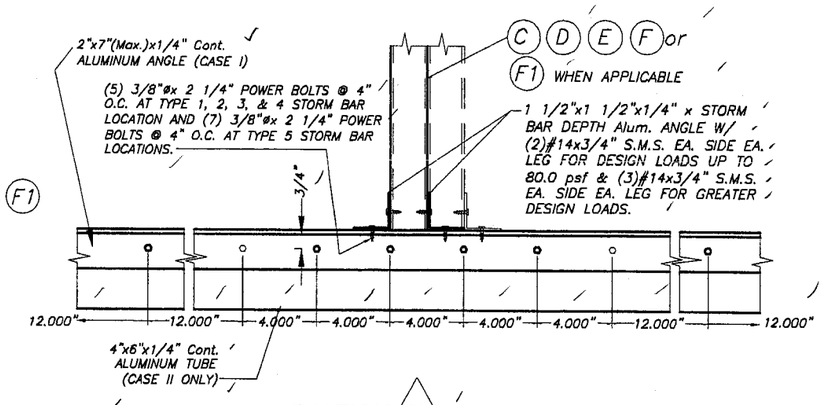


## ELEVATION X

SCALE : 1/8" = 1"

09/14/06
06-0710.02

F.BC. (High Velocity Hurricane Zone)

JUN 19 2006

TILTECO INC.
TILLIT TESTING & ENGINEERING COMPANY
6355 N.W. 36th. St., Ste. 305 – VIRGINIA GARDENS, FL 33166
Phone : (305)871-1530 . Fax : (305)871-1531
EB-0006719
WALTER A. TILLIT Jr., P. E.
FLORIDA Lic. # 44167

ASSA/60mm BERTHA ROLL-UP

**WEST PALM INSTALLERS, INC.**
(ASSA # 332)
6819 NW 84TH AVENUE
DORAL, FL. 33166
PH.:(305)406-3575, FAX:(305)406-3576

| REV. No | DESCRIPTION | DATE | REV. No | DESCRIPTION | DATE |
|---|---|---|---|---|---|
| 1 | – | – | 3 | | |
| 2 | | | 4 | | |

DRAWN BY: S.M.
6/16/06 DATE
06-160 DRAWING No
SHEET 6 OF 14

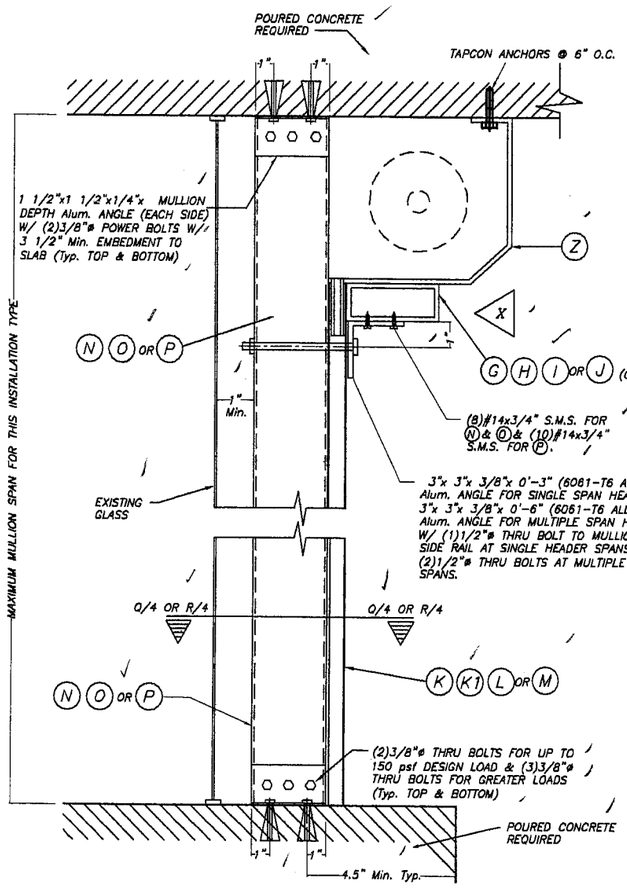


## FLOOR/CEILING MOUNTING : SECTION W-W (1), W/O HEADER SECTION W-W (2), W/HEADER

SCALE : 1/8" = 1"

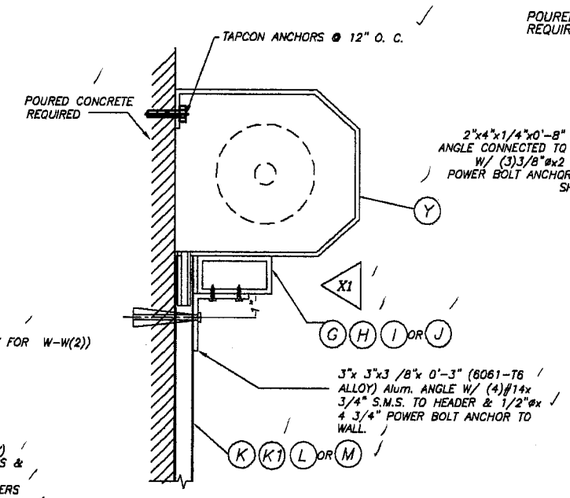


## ALTERNATIVE: 1 WALL MOUNTING : SECTION W-W (3)

SCALE : 1/8" = 1"

**NOTE:**
THIS INSTALLATION IS ONLY VALID FOR STORM BARS WITH MAX. SPAN= 7'-0", HEADERS CON 12'-0" MAX. SINGLE SPAN & 80 p.s.f. MAXIMUM DESIGN LOAD, OR STORM BARS WITH MAX. SPAN = 6'-0", HEADERS WITH 15'-0" SINGLE 80 p.s.f. MAXIMUM DESIGN LOAD.

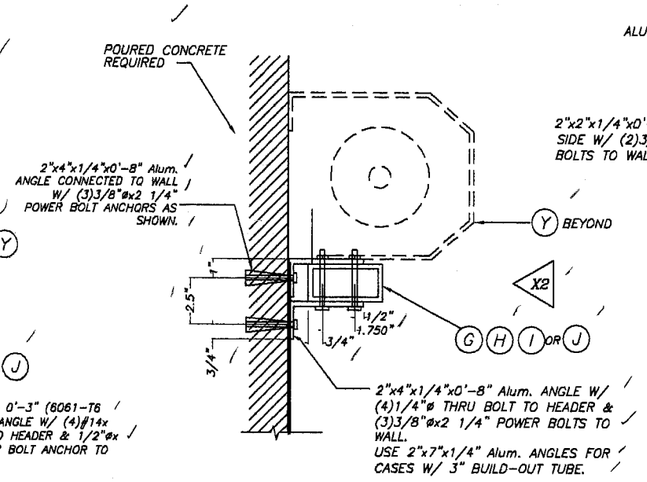


## ALTERNATIVE: 2 WALL MOUNTING : SECTION W-W(3)

SCALE : 1/8" = 1"

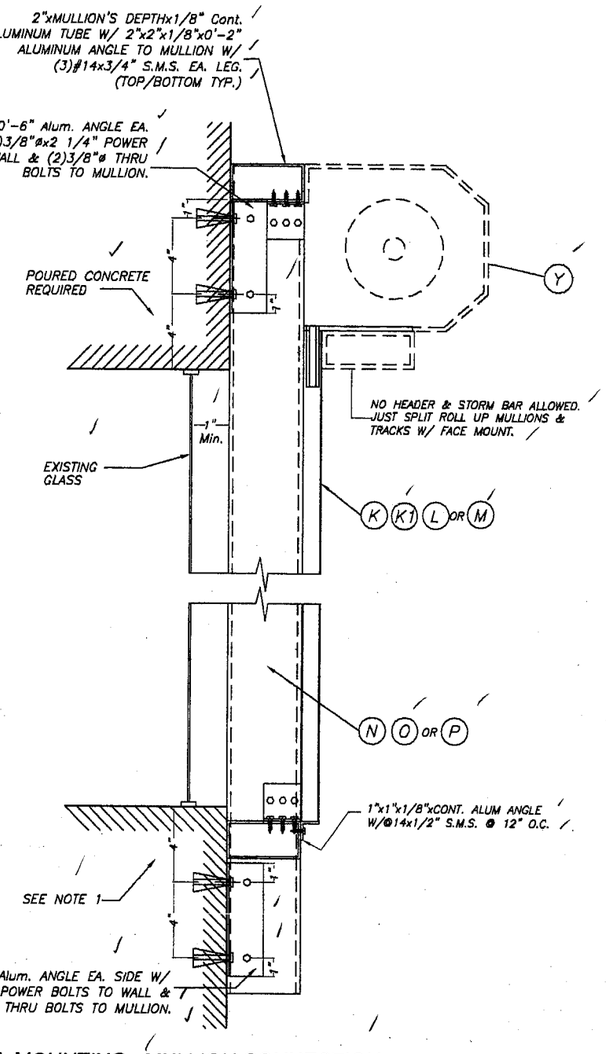


## WALL MOUNTING : MULLION CONNECTION AT TOP & BOTTOM : SECTION W-W (1)

SCALE : 1/8" = 1"

NOTE 1:
EXISTING WALL MAY BE CONCRETE BLOCK FOR DESIGN LOADS UP TO 80.0 psf W/ 9'-0" Max. MULLION HEIGHT AND SHALL BE POURED CONCRETE OR CONCRETE FILLED BLOCK FOR GREATER LOADS.

09/14/06
06-0740.02

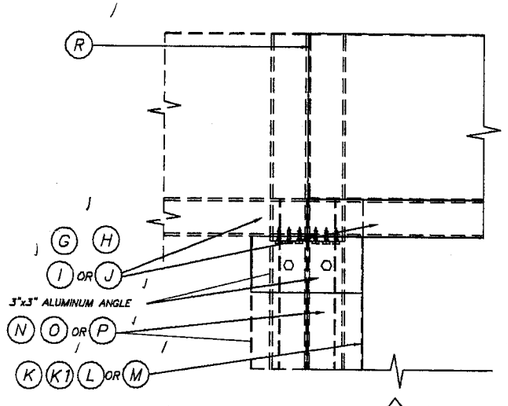


## ELEVATION X

SCALE : 1/8" = 1"

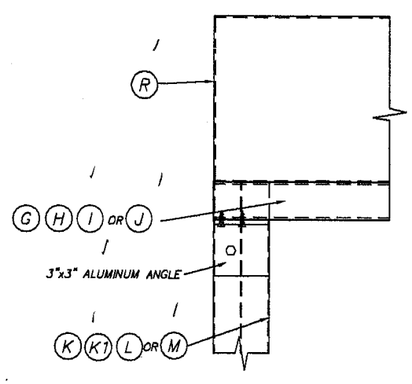


## ELEVATION X1

SCALE : 1/8" = 1"

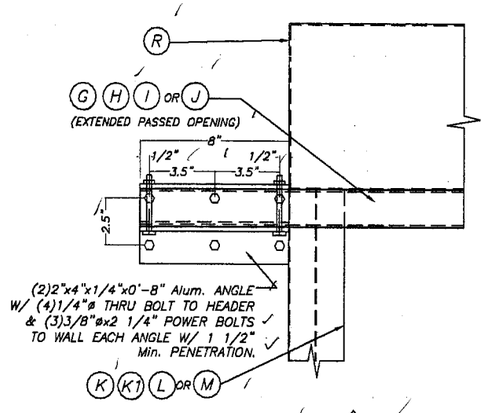


## ELEVATION X2

SCALE : 1/8" = 1"

## TYPICAL HEADER CONNECTION AT ENDS: SECTION W-W

F.BC. (High Velocity Hurricane Zone)

JUN 19 2006


TILTECO INC.
TILLIT TESTING & ENGINEERING COMPANY
6355 N.W. 36th. St., Ste. 305 - VIRGINIA GARDENS, FL 33166
Phone : (305)871-1530 . Fax : (305)871-1531
EB-0006719
WALTER A. TILLIT Jr., P. E.
FLORIDA Lic. # 44167


ASSA/60mm BERTHA ROLL-UP


**WEST PALM INSTALLERS, INC.**
(ASSA # 332)
6819 NW 84TH AVENUE
DORAL, FL 33166
PH.:(305)406-3575, FAX:(305)406-3576


| REV. No | DESCRIPTION | DATE | REV. No | DESCRIPTION | DATE |
|---|---|---|---|---|---|
| 1 | - | - | 3 | | |
| 2 | | | 4 | | |

DRAWN BY: S.M.
6/16/06 DATE
06-160 DRAWING No
SHEET 7 OF 14

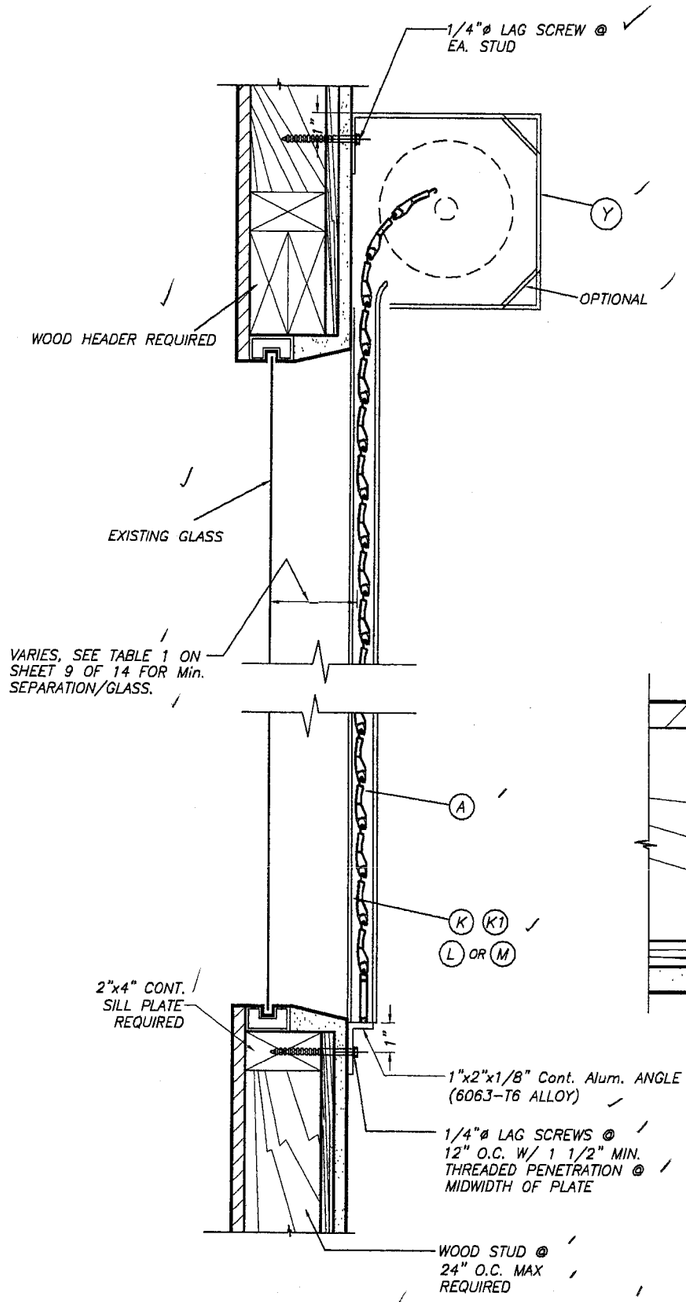


## WALL MOUNTING INSTALLATION
### SINGLE SPAN CONDITION
SCALE: N.T.S.

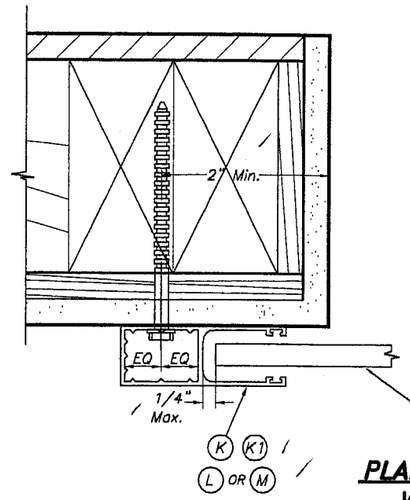


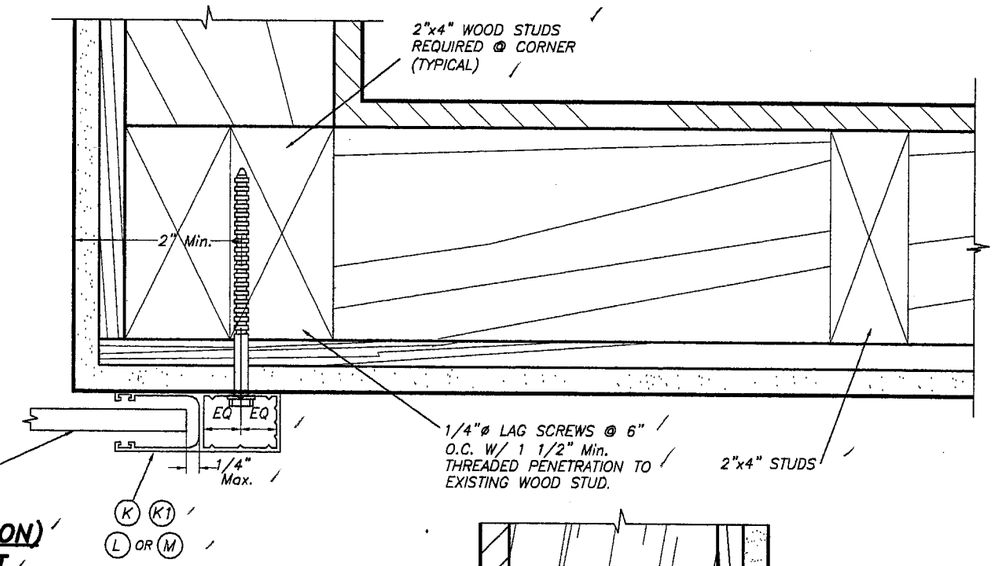


## PLAN A (SECTION) WALL MOUNT
SCALE : 3/8" = 1"

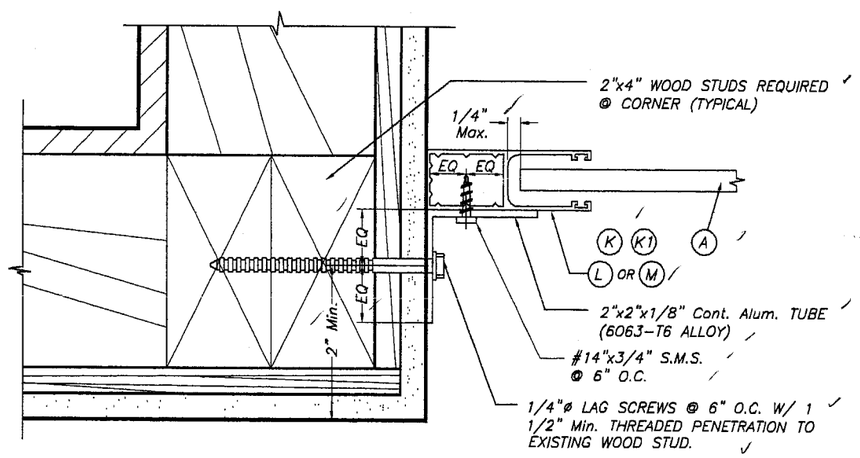


## PLAN B (SECTION) INSIDE MOUNT
SCALE : 3/8" = 1"

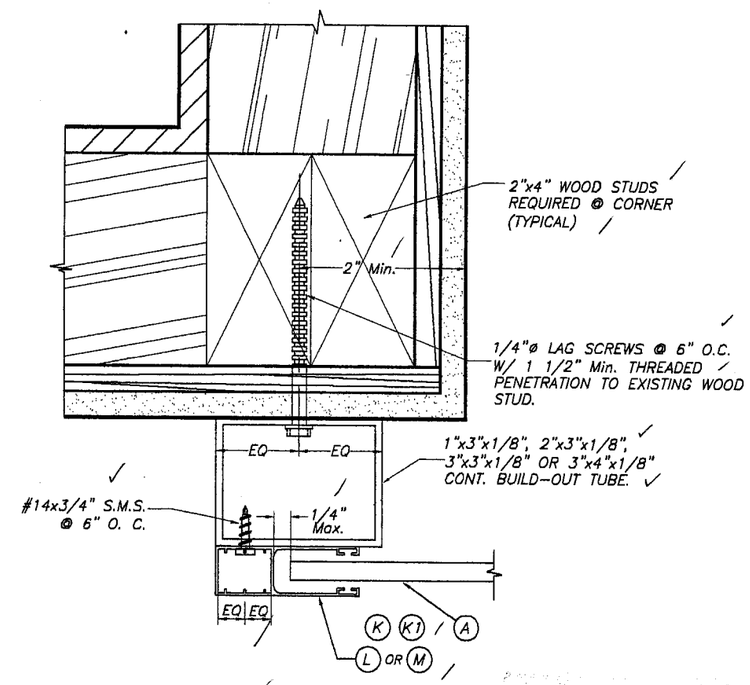


## PLAN C (SECTION) BUILD-OUT
SCALE : 3/8" = 1"

09/14/06
06-0710.02

NOTES:

1. INSTALLATIONS ARE ONLY VALID FOR BUILDINGS WITH DESIGN LOADS UP TO 75.0 psf.
2. FOR NEW FRAME CONSTRUCTION: WOOD MEMBER TO BE SOUTHERN PINE No. 2 W/ SPECIFIC DENSITY OF 0.55 OR EQUAL.
3. MINIMUM PENETRATION OF LAG SCREWS INTO WOOD MEMBER TO BE 1 1/2".

F.BC. (High Velocity Hurricane Zone)


TILTECO INC.
TILLIT TESTING & ENGINEERING COMPANY
6355 N.W. 36th. St., Ste. 305 - VIRGINIA GARDENS, FL 33166
Phone : (305)871-1530 , Fax : (305)871-1531
EB-0006719
WALTER A. TILLIT Jr., P. E.
FLORIDA Lic. # 44167


JUN 19 2006

ASSA/60mm BERTHA ROLL-UP


WEST PALM INSTALLERS, INC.
(ASSA # 332)
6819 NW 84TH AVENUE
DORAL, FL. 33166
PH.:(305)406-3575, FAX:(305)406-3576


| REV. No | DESCRIPTION | DATE | REV. No | DESCRIPTION | DATE |
|---|---|---|---|---|---|
| 1 | - | - | 3 | | |
| 2 | | | 4 | | |

DRAWN BY: S.M.
6/16/06 DATE
06-160 DRAWING No
SHEET 8 OF 14

# SLAT PERFORMANCE CHART
## MAXIMUM NEGATIVE DESIGN PRESSURE RATING "W" (p. s. f.) AND CORRESPONDING MAXIMUM SLAT SPAN "L" FOR TYPE 1 SLAT

(USE MAXIMUM VALUES BETWEEN POSITIVE AND NEGATIVE LOAD)

| SLAT TYPE / Max. DESIGN LOAD "W" (p.s.f.) | MAXIMUM SLAT SPAN | MINIMUM SEPARATION TO GLASS | |
|---|---|---|---|
| | SINGLE & MULTIPLE UNIT * | SINGLE & MULTIPLE UNIT ** | SINGLE & MULTIPLE UNIT *** |
| 40.0 | 6'-5" | 4 3/8" | 3 5/8" |
| 45.0 | 6'-2" | 4" | 3 1/2" |
| 50.0 | 5'-11" | 4" | 3 3/8" |
| 55.0 | 5'-9" | 4" | 3 3/8" |
| 60.0 | 5'-7" | 4" | 3 1/4" |
| 65.0 | 5'-5" | 4" | 3 1/4" |
| 70.0 | 5'-4' | 4" | 3 1/8" |
| 75.0 | 5'-2" | 4" | 3 1/8" |
| 80.0 | 5'-1" | 4" | 3" |
| 85.0 | 5'-0" | 4" | 3" |
| 90.0 | 4'-11" | 4" | 3" |
| 95.0 | 4'-10" | 4" | 3" |
| 100.0 | 4'-9" | 4" | 3" |
| 105.0 | 4'-8" | 4" | 3" |
| 110.0 | 4'-7" | 4" | 2 7/8" |
| 115.0 | 4'-6" | 2 7/8" | 2 7/8" |
| 120.0 | 4'-5" | 2 7/8" | 2 7/8" |
| 125.0 | 4'-5" | 2 7/8" | 2 7/8" |
| 130.0 | 4'-4" | 2 3/4" | 2 3/4" |
| 135.0 | 4'-3" | 2 3/4" | 2 3/4" |
| 140.0 | 4'-3" | 2 3/4" | 2 3/4" |
| 145.0 | 4'-2" | 2 3/4" | 2 3/4" |
| 150.0 | 4'-1" | 2 3/4" | 2 3/4" |
| 155.0 | 4'-1" | 2 3/4" | 2 3/4" |
| 160.0 | 4'-0" | 2 5/8" | 2 5/8" |
| 165.0 | 4'-0" | 2 5/8" | 2 5/8" |
| 170.0 | 3'-11" | 2 5/8" | 2 5/8" |
| 175.0 | 3'-11" | 2 5/8" | 2 5/8" |
| 180.0 | 3'-11" | 2 5/8" | 2 5/8" |
| 185.0 | 3'-10" | 2 5/8" | 2 5/8" |
| 190.0 | 3'-10" | 2 5/8" | 2 5/8" |
| 195.0 | 3'-9" | 2 1/2" | 2 1/2" |

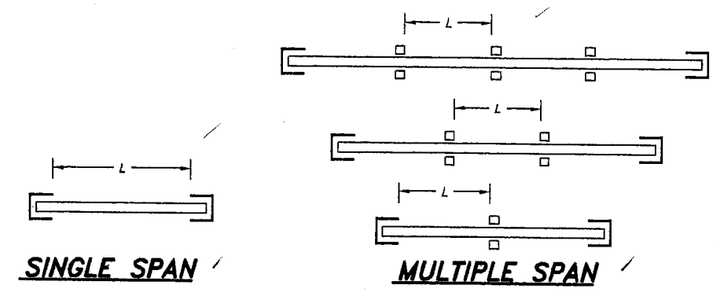


**SINGLE SPAN** **MULTIPLE SPAN**

**SPAN LAYOUT**

* SPANS VALID FOR EVERY INSTALLATION LOCATED AT ANY ELEVATION OF BUILDING MEASURED AT BOTTOM OF SHUTTER. MINIMUM SEPARATION TO GLASS FOR SINGLE AND MULTIPLE UNITS SHALL BE MEASURED FROM BACK OF SLAT TO GLASS.

** MINIMUM SEPARATION TO GLASS FOR SHUTTERS INSTALLED WITHIN THE FIRST 30'-0" ELEVATION OF BUILDING AND MAXIMUM SPAN. SEE TABLE 1 FOR Min. SEPARATION TO GLASS FOR SPANS LESS THAN THE Max. ALLOWED.

*** MINIMUM SEPARATION TO GLASS FOR SHUTTERS INSTALLED ABOVE 30'-0" ELEVATION OF BUILDING, MEASURED AT BOTTOM OF SHUTTER.

**TABLE 1:**

| SLAT SPAN (ft.) | MINIMUM SEPARATION TO GLASS |
|---|---|
| 48" OR LESS | 2 5/8" |
| > 48" TO 54" | 2 7/8" |
| > 54" TO 74" | 4" |
| > 74" TO 77" | 4 3/8" |

09/14/06
06-0710.02

F.BC. (High Velocity Hurricane Zone)

JUN 19 2006


TILTECO INC.
TILLIT TESTING & ENGINEERING COMPANY
6355 N.W. 36th. St., Ste. 305 – VIRGINIA GARDENS, FL. 33166
Phone : (305)871-1530 . Fax : (305)871-1531
EB-0006719
WALTER A. TILLIT Jr., P. E.
FLORIDA Lic. # 44167


ASSA/60mm BERTHA ROLL-UP


**WEST PALM INSTALLERS, INC.**
(ASSA # 332)
6819 NW 84TH AVENUE
DORAL, FL. 33166
PH.:(305)406-3575, FAX:(305)406-3576


| REV. No | DESCRIPTION | DATE | REV. No | DESCRIPTION | DATE |
|---|---|---|---|---|---|
| 1 | – | – | 3 | | |
| 2 | | | 4 | | |

DRAWN BY: S.M.
6/16/06 DATE
06-160 DRAWING No
SHEET 9 OF 14

# STORM BAR LOADING CHART

## MAXIMUM DESIGN PRESSURE RATING "W" (p. s. f.) AND CORRESPONDING MAXIMUM SPAN "L" FOR A GIVEN TYPE OF STORM BAR AND STORM BAR SPACING.

(USE MAXIMUM VALUES BETWEEN POSITIVE AND NEGATIVE LOAD)

**MAX. SPAN FOR STORM BARS W/REGULAR CONCRETE ANCHORS**

| MAXIMUM DESIGN LOAD "W" (p.s.f.) | TYPE 1 STORM BAR 2" x 2" x 1/4" (C) | | | | | TYPE 2 STORM BAR 2" x 3" x 1/8" (D) | | | | | TYPE 3 STORM BAR 2" x 4" x 1/8" (E) | | | | |
|---|---|---|---|---|---|---|---|---|---|---|---|---|---|---|---|
| | * STORM BAR SPACING | | | | | * STORM BAR SPACING | | | | | * STORM BAR SPACING | | | | |
| | ≤ 3'-0" | 3' TO 4' | 4' TO 5' | 5' TO 6' | 6' TO 6.5' | ≤ 3'-0" | 3' TO 4' | 4' TO 5' | 5' TO 6' | 6' TO 6.5' | ≤ 3'-0" | 3' TO 4' | 4' TO 5' | 5' TO 6' | 6' TO 6.5' |
| 40 OR LESS | 7'-7" | 7'-1" | 6'-9" | 6'-2" | 5'-11" | 8'-0" | 7'-9" | 6'-11" | 6'-4" | 6'-1" | 10'-0" | 9'-6" | 8'-6" | 7'-9" | 7'-5" |
| 45 | 7'-5" | 6'-11" | 6'-4" | 5'-10" | 5'-7" | 8'-0" | 7'-4" | 6'-7" | 6'-0" | 5'-9" | 9'-11" | 8'-11" | 8'-0" | 7'-4" | 7'-0" |
| 50 | 7'-3" | 6'-9" | 6'-0" | 5'-6" | 5'-4" | 8'-0" | 6'-11" | 6'-3" | 5'-8" | 5'-5" | 9'-8" | 8'-6" | 7'-7" | 6'-11" | 6'-8" |
| 55 | 7'-0" | 6'-5" | 5'-9" | 5'-3" | 5'-1" | 7'-8" | 6'-8" | 5'-11" | 5'-5" | – | 9'-4" | 8'-1" | 7'-3" | 6'-7" | – |
| 60 | 6'-11" | 6'-2" | 5'-6" | 5'-0" | 4'-10" | 7'-4" | 6'-4" | 5'-8" | 5'-2" | – | 8'-11" | 7'-9" | 6'-11" | 6'-4" | – |
| 65 | 6'-9" | 5'-11" | 5'-4" | 4'-10" | 4'-8" | 7'-1" | 6'-1" | 5'-5" | 5'-0" | – | 8'-7" | 7'-5" | 6'-8" | 6'-1" | – |
| 70 | 6'-7" | 5'-8" | 5'-1" | 4'-8" | 4'-6" | 6'-9" | 5'-11" | 5'-3" | 4'-10" | – | 8'-3" | 7'-2" | 6'-5" | 5'-10" | – |
| 75 | 6'-4" | 5'-6" | 4'-11" | 4'-6" | 4'-4" | 6'-7" | 5'-8" | 5'-1" | 4'-8" | – | 8'-0" | 6'-11" | 6'-2" | 5'-8" | – |
| 80 | 6'-2" | 5'-4" | 4'-9" | 4'-4" | 4'-2" | 6'-4" | 5'-6" | 4'-11" | 4'-6" | – | 7'-9" | 6'-9" | 6'-0" | 5'-6" | – |
| 85 | 6'-0" | 5'-2" | 4'-8" | 4'-3" | 4'-1" | 6'-2" | 5'-4" | 4'-9" | 4'-4" | – | 7'-6" | 6'-6" | 5'-10" | 5'-4" | – |
| 90 | 5'-10" | 5'-0" | 4'-6" | 4'-1" | 3'-11" | 6'-0" | 5'-2" | 4'-8" | 4'-3" | – | 7'-4" | 6'-4" | 5'-8" | 5'-2" | – |
| 95 | 5'-8" | 4'-11" | 4'-5" | 4'-0" | 3'-10" | 5'-10" | 5'-1" | 4'-6" | 4'-1" | – | 7'-1" | 6'-2" | 5'-6" | 5'-0" | – |
| 100 | 5'-6" | 4'-9" | 4'-3" | 3'-11" | 3'-9" | 5'-8" | 4'-11" | 4'-5" | 4'-0" | – | 6'-11" | 6'-0" | 5'-4" | 4'-11" | – |
| 105 | 5'-5" | 4'-8" | 4'-2" | 3'-10" | 3'-8" | 5'-7" | 4'-10" | 4'-4" | 3'-11" | – | 6'-9" | 5'-10" | 5'-3" | 4'-9" | – |
| 110 | 5'-3" | 4'-7" | 4'-1" | 3'-9" | 3'-7" | 5'-5" | 4'-8" | 4'-2" | 3'-10" | – | 6'-7" | 5'-9" | 5'-1" | 4'-8" | – |
| 115 | 5'-2" | 4'-5" | 4'-0" | 3'-8" | 3'-6" | 5'-4" | 4'-7" | 4'-1" | 3'-9" | – | 6'-6" | 5'-7" | 5'-0" | 4'-7" | – |
| 120 | 5'-0" | 4'-4" | 3'-11" | 3'-7" | 3'-5" | 5'-2" | 4'-6" | 4'-0" | 3'-8" | – | 6'-4" | 5'-6" | 4'-11" | 4'-6" | – |
| 125 | 4'-11" | 4'-3" | 3'-10" | 3'-6" | 3'-4" | 5'-1" | 4'-5" | 3'-11" | 3'-7" | – | 6'-2" | 5'-4" | 4'-10" | 4'-5" | – |
| 130 | 4'-10" | 4'-2" | 3'-9" | 3'-5" | 3'-3" | 5'-0" | 4'-4" | 3'-10" | 3'-6" | – | 6'-1" | 5'-3" | 4'-9" | 4'-4" | – |
| 135 | 4'-9" | 4'-1" | 3'-8" | 3'-4" | 3'-3" | 4'-11" | 4'-3" | 3'-9" | 3'-5" | – | 6'-0" | 5'-2" | 4'-7" | 4'-3" | – |
| 140 | 4'-8" | 4'-0" | 3'-7" | 3'-4" | 3'-2" | 4'-10" | 4'-2" | 3'-9" | 3'-5" | – | 5'-10" | 5'-1" | 4'-6" | 4'-2" | – |
| 145 | 4'-7" | 4'-0" | 3'-7" | 3'-3" | 3'-1" | 4'-9" | 4'-1" | 3'-8" | 3'-4" | – | 5'-9" | 5'-0" | 4'-6" | 4'-1" | – |
| 150 | 4'-6" | 3'-11" | 3'-6" | 3'-2" | 3'-1" | 4'-8" | 4'-0" | 3'-7" | 3'-3" | – | 5'-8" | 4'-11" | 4'-5" | 4'-0" | – |
| 155 | 4'-5" | 3'-10" | 3'-5" | 3'-2" | 3'-0" | 4'-7" | 3'-11" | 3'-6" | 3'-3" | – | 5'-7" | 4'-10 | 4'-4" | 3'-11" | – |
| 160 | 4'-4" | 3'-9" | 3'-4" | 3'-1" | 3'-0" | 4'-6" | 3'-11" | 3'-6" | 3'-2" | – | 5'-6" | 4'-9" | 4'-3" | 3'-11" | – |
| 165 | 4'-3" | 3'-9" | 3'-4" | 3'-0" | 2'-11" | 4'-5" | 3'-10" | 3'-5" | 3'-2" | – | 5'-5" | 4'-8" | 4'-2" | 3'-10" | – |
| 170 | 4'-3" | 3'-8" | 3'-3" | 3'-0" | 2'-10" | 4'-4" | 3'-9" | 3'-4" | 3'-1" | – | 5'-4" | 4'-7" | 4'-1" | 3'-9" | – |
| 175 | 4'-2" | 3'-7" | 3'-3" | 2'-11" | 2'-10" | 4'-4" | 3'-9" | 3'-4" | 3'-0" | – | 5'-3" | 4'-6" | 4'-1" | 3'-8" | – |
| 180 | 4'-1" | 3'-7" | 3'-2" | 2'-11" | 2'-9" | 4'-3" | 3'-8" | 3'-3" | 3'-0" | – | 5'-2" | 4'-6" | 4'-0" | 3'-8" | – |
| 185 | 4'-1" | 3'-6" | 3'-2" | 2'-10" | 2'-9" | 4'-2" | 3'-7" | 3'-3" | 2'-11" | – | 5'-1" | 4'-5" | 3'-11" | 3'-7" | – |
| 190 | 4'-0" | 3'-6" | 3'-1" | 2'-10" | 2'-9" | 4'-1" | 3'-7" | 3'-2" | 2'-11" | – | 5'-0" | 4'-4" | 3'-11" | 3'-7" | – |
| 195 | 3'-11" | 3'-5" | 3'-1" | 2'-9" | 2'-8" | 4'-1" | 3'-6" | 3'-2" | 2'-11" | – | 5'-0" | 4'-4" | 3'-10" | 3'-6" | – |

Approved
Partial
Date 09/14/06
NOAC 06-0710.02
Other
Division
By

F.BC. (High Velocity Hurricane Zone)

* STORM BAR SPACING SHALL BE SUCH THAT MAXIMUM SLAT SPAN SHALL NOT BE EXCEEDED.

JUN 19 2006


TILTECO INC.
TILLIT TESTING & ENGINEERING COMPANY
6355 N.W. 36th. St., Ste. 305 - VIRGINIA GARDENS, FL 33166
Phone : (305)871-1530 . Fax : (305)871-1531
EB-0006719
WALTER A. TILLIT Jr., P. E.
FLORIDA Lic. # 44167


ASSA/60mm BERTHA ROLL-UP


**WEST PALM INSTALLERS, INC.**
(ASSA # 332)
6819 NW 84TH AVENUE
DORAL, FL. 33166
PH.:(305)406-3575, FAX:(305)406-3576


| REV. No | DESCRIPTION | DATE | REV. No | DESCRIPTION | DATE |
|---|---|---|---|---|---|
| 1 | – | – | 3 | | |
| 2 | | | 4 | | |

DRAWN BY: S.M.

6/16/06 DATE

06-160 DRAWING No

SHEET 10 OF 14

# STORM BAR LOADING CHART

## MAXIMUM DESIGN PRESSURE RATING "W" (p. s. f.) AND CORRESPONDING MAXIMUM SPAN "L" FOR A GIVEN TYPE OF STORM BAR AND STORM BAR SPACING.

(USE MAXIMUM VALUES BETWEEN POSITIVE AND NEGATIVE LOAD)

**MAX. SPAN FOR STORM BARS W/REGULAR CONCRETE ANCHORS**

| MAXIMUM DESIGN LOAD "W" (p.s.f.) | TYPE 4 STORM BAR 2" x 4" x .250" (F) | | | | | TYPE 5 STORM BAR (2) 2" x 4" x .250" (F1) | | | | |
|---|---|---|---|---|---|---|---|---|---|---|
| | * STORM BAR SPACING | | | | | * STORM BAR SPACING | | | | |
| | ≤ 3'-0" | 3' TO 4' | 4' TO 5' | 5' TO 6' | 6' TO 6.5' | ≤ 3'-0" | 3' TO 4' | 4' TO 5' | 5' TO 6' | 6' TO 6.5' |
| 40 OR LESS | 11'-10" | 11'-0" | 10'-5" | 9'-11" | 9'-9" | 14'-1" | 13'-1" | 12'-5" | 11'-10" | 11'-7" |
| 45 | 11'-6" | 10'-8" | 10'-1" | 9'-8" | 9'-3" | 13'-8" | 12'-9" | 12'-0" | 11'-6" | 11'-3" |
| 50 | 11'-2" | 10'-5" | 9'-10" | 9'-2" | 8'-10" | 13'-4" | 12'-5" | 11'-9" | 11'-2" | 11'-0" |
| 55 | 10'-11" | 10'-2" | 9'-7" | 8'-9" | – | 13'-0" | 12'-1" | 11'-5" | 10'-11" | – |
| 60 | 10'-8" | 9'-11" | 9'-2" | 8'-4" | – | 12'-9" | 11'-10" | 11'-2" | 10'-8" | – |
| 65 | 10'-6" | 9'-9" | 8'-10" | 8'-1" | – | 12'-6" | 11'-7" | 11'-0" | 10'-6" | – |
| 70 | 10'-4" | 9'-6" | 8'-6" | 7'-9" | – | 12'-3" | 11'-5" | 10'-9" | 10'-4" | – |
| 75 | 10'-1" | 9'-2" | 8'-2" | 7'-6" | – | 12'-0" | 11'-2" | 10'-7" | 10'-1" | – |
| 80 | 9'-11" | 8'-11" | 7'-11" | 7'-3" | – | 11'-10" | 11'-0" | 10'-5" | 9'-11" | – |
| 85 | 9'-10" | 8'-7" | 7'-8" | 7'-0" | – | 11'-8" | 10'-10" | 10'-3" | 9'-10" | – |
| 90 | 9'-8" | 8'-4" | 7'-6" | 6'-10" | – | 11'-6" | 10'-8" | 10'-1" | 9'-8" | – |
| 95 | 9'-5" | 8'-2" | 7'-3" | 6'-8" | – | 11'-4" | 10'-7" | 10'-0" | 9'-5" | – |
| 100 | 9'-2" | 7'-11" | 7'-1" | 6'-6" | – | 11'-2" | 10'-5" | 9'-10" | 9'-2" | – |
| 105 | 8'-11" | 7'-9" | 6'-11" | 6'-4" | – | 11'-1" | 10'-4" | 9'-9" | 8'-11" | – |
| 110 | 8'-9" | 7'-7" | 6'-9" | 6'-2" | – | 10'-11" | 10'-2" | 9'-7" | 8'-9" | – |
| 115 | 8'-7" | 7'-5" | 6'-8" | 6'-1" | – | 10'-10" | 10'-1" | 9'-4" | 8'-7" | – |
| 120 | 8'-4" | 7'-3" | 6'-6" | 5'-11" | – | 10'-8" | 9'-11" | 9'-2" | 8'-4" | – |
| 125 | 8'-2" | 7'-1" | 6'-4" | 5'-10" | – | 10'-7" | 9'-10" | 9'-0" | 8'-2" | – |
| 130 | 8'-1" | 7'-0" | 6'-3" | 5'-8" | – | 10'-6" | 9'-9" | 8'-10" | 8'-0" | – |
| 135 | 7'-11" | 6'-10" | 6'-1" | 5'-7" | – | 10'-5" | 9'-8" | 8'-8" | 7'-11" | – |
| 140 | 7'-9" | 6'-9" | 6'-0" | 5'-6" | – | 10'-4" | 9'-6" | 8'-6" | 7'-9" | – |
| 145 | 7'-7" | 6'-7" | 5'-11" | 5'-5" | – | 10'-2" | 9'-4" | 8'-4" | 7'-7" | – |
| 150 | 7'-6" | 6'-6" | 5'-10" | 5'-4" | – | 10'-1" | 9'-2" | 8'-2" | 7'-6" | – |
| 155 | 7'-4" | 6'-5" | 5'-8" | 5'-3" | – | 10'-0" | 9'-0" | 8'-1" | 7'-4" | – |
| 160 | 7'-3" | 6'-3" | 5'-7" | 5'-2" | – | 9'-11" | 8'-10" | 7'-11" | 7'-3" | – |
| 165 | 7'-2" | 6'-2" | 5'-6" | 5'-1" | – | 9'-11" | 8'-9" | 7'-10" | 7'-2" | – |
| 170 | 7'-0" | 6'-1" | 5'-5" | 5'-0" | – | 9'-10" | 8'-7" | 7'-8" | 7'-0" | – |
| 175 | 6'-11" | 6'-0" | 5'-4" | 4'-11" | – | 9'-9" | 8'-6" | 7'-7" | 6'-11" | – |
| 180 | 6'-10" | 5'-11" | 5'-4" | 4'-10" | – | 9'-8" | 8'-4" | 7'-6" | 6'-10" | – |
| 185 | 6'-9" | 5'-10" | 5'-3" | 4'-9" | – | 9'-6" | 8'-3" | 7'-5" | 6'-9" | – |
| 190 | 6'-8" | 5'-9" | 5'-2" | 4'-8" | – | 9'-5" | 8'-2" | 7'-3" | 6'-8" | – |
| 195 | 6'-7" | 5'-8" | 5'-1" | 4'-8" | – | 9'-3" | 8'-0" | 7'-2" | 6'-7" | – |

* STORM BAR SPACING SHALL BE SUCH THAT MAXIMUM SLAT SPAN SHALL NOT BE EXCEEDED.

04/14/06
06-0770 02

F.BC. (High Velocity Hurricane Zone)

JUN 19 2006


TILTECO INC.
TILLIT TESTING & ENGINEERING COMPANY
6355 N.W. 36th. St., Ste. 305 – VIRGINA GARDENS, Fl. 33166
Phone : (305)871-1530 . Fax : (305)871-1531
EB-0006719
WALTER A. TILLIT Jr., P. E.
FLORIDA Lic. # 44167


ASSA/60mm BERTHA ROLL-UP


**WEST PALM INSTALLERS, INC.**
(ASSA # 332)
6819 NW 84TH AVENUE
DORAL, FL. 33166
PH.:(305)406-3575, FAX:(305)406-3576


| REV. No | DESCRIPTION | DATE | REV. No | DESCRIPTION | DATE |
|---|---|---|---|---|---|
| 1 | – | – | 3 | | |
| 2 | | | 4 | | |

DRAWN BY: S.M.

6/16/06
DATE

06-160
DRAWING No

SHEET 11 OF 14

# HEADER LOADING CHART

## MAXIMUM NEGATIVE DESIGN PRESSURE RATING "W" (p. s. f.) AND CORRESPONDING MAXIMUM SPAN "L" FOR A GIVEN TYPE OF HEADER.

(USE MAXIMUM VALUES BETWEEN POSITIVE AND NEGATIVE LOAD)

| MAXIMUM DESIGN LOAD "W" (p.s.f.) | TYPE 1 HEADER (G) 2" x 3" x 1/8" | | TYPE 2 HEADER (H) 2" x 4" x 1/8" | | | TYPE 3 HEADER (I) 2" x 4" x 1/4" | | | | | TYPE 4 HEADER (J) 2" x 6" x 1/8" | | | | |
|---|---|---|---|---|---|---|---|---|---|---|---|---|---|---|---|
| | STORM BAR HEIGHT | | STORM BAR HEIGHT | | | STORM BAR HEIGHT | | | | | STORM BAR HEIGHT | | | | |
| | ≤ 5'-0" | 5' TO 7' | ≤ 5'-0" | 5' TO 8' | 8' TO 10' | ≤ 6'-0" | 6' TO 8' | 8' TO 10' | 10' TO 12' | 12' TO 14' | ≤ 6'-0" | 6' TO 8' | 8' TO 10' | 10' TO 12' | 12' TO 14' |
| 40.0 OR LESS | 9'-11" | 8'-4" | 12'-2" | 9'-8" | 8'-8" | 14'-10" | 12'-10" | 11'-6" | 10'-6" | 9'-9" | 15'-1" | 13'-1" | 11'-8" | 10'-8" | 9'-11" |
| 45.0 | 9'-4" | 7'-11" | 11'-6" | 9'-1" | 8'-2" | 14'-0" | 12'-2" | 10'-10" | 9'-11" | 9'-2" | 14'-3" | 12'-4" | 11'-0" | 10'-1" | 9'-4" |
| 50.0 | 8'-10" | 7'-6" | 10'-11" | 8'-8" | 7'-9" | 13'-3" | 11'-6" | 10'-4" | 9'-5" | 8'-8" | 13'-6" | 11'-8" | 10'-6" | 9'-7" | 8'-10" |
| 55.0 | 8'-5" | 7'-2" | 10'-5" | 8'-3" | 7'-4" | 12'-8" | 11'-0" | 9'-10" | 9'-0" | 8'-4" | 12'-11" | 11'-2" | 10'-0" | 9'-1" | 8'-5" |
| 60.0 | 8'-1" | 6'-10" | 10'-0" | 7'-10" | 7'-1" | 12'-2" | 10'-6" | 9'-5" | 9'-7" | 7'-11" | 12'-4" | 10'-8" | 9'-7" | 8'-9" | 8'-1" |
| 65.0 | 7'-9" | 6'-7" | 9'-7" | 7'-7" | 6'-9" | 11'-8" | 10'-1" | 9'-0" | 8'-3" | 7'-8" | 11'-10" | 10'-3" | 9'-2" | 8'-4" | 7'-9" |
| 70.0 | 7'-6" | 6'-4" | 9'-3" | 7'-3" | 6'-6" | 11'-3" | 9'-9" | 8'-8" | 7'-11" | 7'-4" | 11'-5" | 9'-11" | 8'-10" | 8'-1" | 7'-6" |
| 75.0 | 7'-3" | 6'-1" | 8'-11" | 7'-1" | 6'-4" | 10'-10" | 9'-5" | 8'-5" | 7'-8" | 7'-1" | 11'-0" | 9'-7" | 8'-6" | 7'-10" | 7'-3" |
| 80.0 | 7'-0" | 5'-11" | 8'-8" | 6'-10" | 6'-1" | 10'-6" | 9'-1" | 8'-2" | 7'-5" | 6'-11" | 10'-8" | 9'-3" | 8'-3" | 7'-7" | 7'-0" |
| 85.0 | 6'-9" | 5'-9" | 8'-4" | 6'-7" | 5'-11" | 10'-2" | 8'-10" | 7'-11" | 7'-3" | 6'-8" | 10'-4" | 9'-0" | 8'-0" | 7'-4" | 6'-9" |
| 90.0 | 6'-7" | 5'-7" | 8'-2" | 6'-5" | 5'-9" | 9'-11" | 8'-7" | 7'-8" | 7'-0" | 6'-6" | 10'-1" | 8'-9" | 7'-10" | 7'-1" | 6'-7" |
| 95.0 | 6'-5" | 5'-5" | 7'-11" | 6'-3" | 5'-7" | 9'-8" | 8'-4" | 7'-6" | 6'-10" | 6'-4" | 9'-10" | 8'-6" | 7'-7" | 6'-11" | 6'-5" |
| 100.0 | 6'-3" | 5'-3" | 7'-9" | 6'-1" | 5'-5" | 9'-5" | 8'-2" | 7'-3" | 6'-8" | 6'-2" | 9'-7" | 8'-3" | 7'-5" | 6'-9" | 6'-3" |
| 105.0 | 6'-1" | 5'-2" | 7'-6" | 5'-11" | 5'-4" | 9'-2" | 7'-11" | 7'-1" | 6'-6" | 6'-0" | 9'-4" | 8'-1" | 7'-3" | 6'-7" | 6'-1" |
| 110.0 | 6'-0" | 5'-0" | 7'-4" | 5'-10" | 5'-2" | 9'-0" | 7'-9" | 6'-11" | 6'-4" | 5'-10" | 9'-1" | 7'-11" | 7'-1" | 6'-5" | 6'-0" |
| 115.0 | 5'-10" | 4'-11" | 7'-2" | 5'-8" | 5'-1" | 8'-9" | 7'-7" | 6'-9" | 6'-2" | 5'-9" | 8'-11" | 7'-9" | 6'-11" | 6'-4" | 5'-10" |
| 120.0 | 5'-9" | 4'-10" | 7'-1" | 5'-7" | 5'-0" | 8'-7" | 7'-5" | 6'-8" | 6'-1" | 5'-7" | 8'-9" | 7'-7" | 6'-9" | 6'-2" | 5'-8" |
| 125.0 | 5'-7" | 4'-9" | 6'-11" | 5'-5" | 4'-11" | 8'-5" | 7'-3" | 6'-6" | 5'-11" | 5'-6" | 8'-6" | 7'-5" | 6'-7" | 6'-0" | 5'-7" |
| 130.0 | 5'-6" | 4'-8" | 6'-9" | 5'-4 | 4'-9" | 8'-3" | 7'-2" | 6'-5" | 5'-10" | 5'-5" | 8'-4" | 7'-3" | 6'-6" | 5'-11" | 5'-6" |
| 135.0 | 5'-5" | 4'-7" | 6'-8" | 5'-3" | 4'-8" | 8'-1" | 7'-0" | 6'-3" | 5'-9" | 5'-4" | 8'-3" | 7'-1" | 6'-4" | 5'-10" | 5'-5" |

09/14/06
06-0710.02

F.BC. (High Velocity Hurricane Zone)

JUN 19 2006


TILTECO INC.
TILLIT TESTING & ENGINEERING COMPANY
6355 N.W. 36th. St., Ste. 305 - VIRGINIA GARDENS, FL 33166
Phone : (305)871-1530 . Fax : (305)871-1531
EB-0006719
WALTER A. TILLIT Jr., P. E.
FLORIDA Lic. # 44167


ASSA/60mm BERTHA ROLL-UP


WEST PALM INSTALLERS, INC.
(ASSA # 332)
6819 NW 84TH AVENUE
DORAL, FL. 33166
PH.:(305)406-3575, FAX:(305)406-3576


| REV. No | DESCRIPTION | DATE | REV. No | DESCRIPTION | DATE |
|---|---|---|---|---|---|
| 1 | - | - | 3 | | |
| 2 | | | 4 | | |

DRAWN BY: S.M.

6/16/06 DATE

06-160 DRAWING No

SHEET 12 OF 14

# HEADER LOADING CHART

## MAXIMUM NEGATIVE DESIGN PRESSURE RATING "W" (p. s. f.) AND CORRESPONDING MAXIMUM SPAN "L" FOR A GIVEN TYPE OF HEADER.

(USE MAXIMUM VALUES BETWEEN POSITIVE AND NEGATIVE LOAD)

| MAXIMUM DESIGN LOAD "W" (p.s.f.) | TYPE 1 HEADER (G) 2" x 3" x 1/8" | | TYPE 2 HEADER (H) 2" x 4" x 1/8" | | | TYPE 3 HEADER (I) 2" x 4" x 1/4" | | | | | TYPE 4 HEADER (J) 2" x 6" x 1/8" | | | | |
|---|---|---|---|---|---|---|---|---|---|---|---|---|---|---|---|
| | STORM BAR HEIGHT | | STORM BAR HEIGHT | | | STORM BAR HEIGHT | | | | | STORM BAR HEIGHT | | | | |
| | ⩽ 5'-0" | 5' TO 7' | ⩽ 5'-0" | 5' TO 8' | 8' TO 10' | ⩽ 6'-0" | 6' TO 8' | 8' TO 10' | 10' TO 12' | 12' TO 14' | ⩽ 6'-0" | 6' TO 8' | 8' TO 10' | 10' TO 12' | 12' TO 14' |
| 140.0 | 5'-3" | 4'-6" | 6'-6" | 5'-2" | 4'-7" | 7'-11" | 6'-11" | 6'-2" | 5'-7" | 5'-2" | 8'-1" | 7'-0" | 6'-3" | 5'-8" | 5'-3" |
| 145.0 | 5'-2" | 4'-5" | 6'-5" | 5'-1" | 4'-6" | 7'-10" | 6'-9" | 6'-1" | 5'-6" | 5'-1" | 7'-11" | 6'-10" | 6'-2" | 5'-7" | 5'-2" |
| 150.0 | 5'-1" | 4'-4" | 6'-4" | 5'-0" | 4'-5" | 7'-8" | 6'-8" | 5'-11" | 5'-5" | 5'-0" | 7'-10" | 6'-9" | 6'-0" | 5'-6" | 5'-1" |
| 155.0 | 5'-0" | 4'-3" | 6'-2" | 4'-11" | 4'-5" | 7'-7" | 6'-6" | 5'-10" | 5'-4" | 4'-11" | 7'-8" | 6'-8" | 5'-11" | 5'-5" | 5'-0" |
| 160.0 | 4'-11" | 4'-2" | 6'-1" | 4'-10" | 4'-4" | 7'-5" | 6'-5" | 5'-9" | 5'-3" | 4'-10" | 7'-7" | 6'-6" | 5'-10" | 5'-4" | 4'-11" |
| 165.0 | 4'-10" | 4'-1" | 6'-0" | 4'-9" | 4'-3" | 7'-4" | 6'-4" | 5'-8" | 5'-2" | 4'-9" | 7'-5" | 6'-5" | 5'-9" | 5'-3" | 4'-10" |
| 170.0 | 4'-10" | 4'-1" | 5'-11" | 4'-8" | 4'-2" | 7'-3" | 6'-3" | 5'-7" | 5'-1" | 4'-9" | 7'-4" | 6'-4" | 5'-8" | 5'-2" | 4'-10" |
| 175.0 | 4'-9" | 4'-0" | 5'-10" | 4'-7" | 4'-1" | 7'-1" | 6'-2" | 5'-6" | 5'-0" | 4'-8" | 7'-3" | 6'-3" | 5'-7" | 5'-1" | 4'-9" |
| 180.0 | 4'-8" | 3'-11" | 5'-9" | 4'-7" | 4'-1" | 7'-0" | 6'-1" | 5'-5" | 4'-11" | 4'-7" | 7'-1" | 6'-2" | 5'-6" | 5'-0" | 4'-8" |
| 185.0 | 4'-7" | 3'-11" | 5'-8" | 4'-6" | 4'-0" | 6'-11" | 6'-0" | 5'-4" | 4'-11" | 4'-6" | 7-'0" | 6'-1" | 5'-5" | 5'-0" | 4'-7" |
| 190.0 | 4'-6" | 3'-10" | 5'-7" | 4'-5" | 3'-11" | 6'-10" | 5'-11" | 5'-3" | 4'-10" | 4'-6" | 6'-11" | 6'-0" | 5'-4" | 4'-11" | 4'-6" |
| 195.0 | 4'-6" | 3'-9" | 5'-6" | 4'-4" | 3'-11" | 6'-9" | 5'-10" | 5'-3" | 4'-9" | 4'-5" | 6'-10" | 5'-11" | 5'-4" | 4'-10" | 4'-6" |

09/14/06
06-0710.02

F.BC. (High Velocity Hurricane Zone)

JUN 19 2006


TILTECO INC.
TILLIT TESTING & ENGINEERING COMPANY
6355 N.W. 36th. St., Ste. 305 - VIRGINIA GARDENS, Fl. 33166
Phone : (305)871-1530 . Fax : (305)871-1531
EB-0006719
WALTER A. TILLIT Jr., P. E.
FLORIDA Lic. # 44167


ASSA/60mm BERTHA ROLL-UP


**WEST PALM INSTALLERS, INC.**
(ASSA # 332)
6819 NW 84TH AVENUE
DORAL, FL. 33166
PH.:(305)406-3575, FAX:(305)406-3576


| REV. No | DESCRIPTION | DATE | REV. No | DESCRIPTION | DATE |
|---|---|---|---|---|---|
| 1 | - | - | 3 | | |
| 2 | | | 4 | | |

DRAWN BY: S.M.

6/16/06 DATE

06-160 DRAWING No

# MULLION LOADING CHART

## MAXIMUM DESIGN PRESSURE RATING "W" (p. s. f.) AND CORRESPONDING MAXIMUM SPAN "L"(Ft) FOR A GIVEN TYPE OF MULLION AND MULLION SPACING (Ft.).

(USE MAXIMUM VALUES BETWEEN POSITIVE AND NEGATIVE LOAD)

| MAXIMUM DESIGN LOAD "W" (p.s.f.) | TYPE 1 MULLION (N) 3" x 4" x 1/8" | | | | TYPE 2 MULLION (O) 4" x 4" x 1/4" | | | | TYPE 3 MULLION (P) 4" x 6" x 1/4" | | | | | |
|---|---|---|---|---|---|---|---|---|---|---|---|---|---|---|
| | MULLION SPACING | | | | MULLION SPACING | | | | MULLION SPACING | | | | | |
| | ≤ 4'-0" | 4' TO 5' | 5' TO 6' | 6' TO 8' | ≤ 4'-0" | 4' TO 5' | 5' TO 6' | 6' TO 8' | ≤ 4'-0" | 4' TO 5' | 5' TO 6' | 6' TO 8' | 8' TO 10' | 10' TO 12 |
| 40.0 OR LESS | 9'-0" | 8'-4" | 7'-10" | 8'-2" | 11'-9" | 10'-11" | 10'-3" | 10'-8" | 16'-4" | 15'-2" | 14'-3" | 14'-10" | 13'-10" | 13'-0" |
| 45.0 | 8'-8" | 8'-0" | 7'-7" | 7'-10" | 11'-4" | 10'-6" | 9'-11" | 10'-3" | 15'-8" | 14'-7" | 13'-8" | 14'-4" | 13'-3" | 12'-6" |
| 50.0 | 8'-4" | 7'-9" | 7'-3" | 7'-7" | 10'-11" | 10'-2" | 9'-7" | 9'-11" | 15'-2" | 14'-1" | 13'-3" | 13'-10" | 12'-10" | 12'-1" |
| 55.0 | 8'-1" | 7'-6" | 7'-1" | 7'-4" | 10'-7" | 9'-10" | 9'-3" | 9'-7" | 14'-8" | 13'-7" | 12'-10" | 13'-4" | 12'-5" | 11'-8" |
| 60.0 | 7'-10" | 7'-3" | 6'-10" | 7'-2" | 10'-3" | 9'-7" | 9'-0" | 9'-4" | 14'-3" | 13'-3" | 12'-5" | 13'-0" | 12'-1" | 11'-4" |
| 65.0 | 7'-8" | 7'-1" | 6'-8" | 7'-0" | 10'-0" | 9'-4" | 8'-9" | 9'-1" | 13'-11" | 12'-11" | 12'-2" | 12'-8" | 11'-9" | 11'-1" |
| 70.0 | 7'-5" | 6'-11" | 6'-6" | 6'-10" | 9'-9" | 9'-1" | 8'-6" | 8'-10" | 13'-7" | 12'-7" | 11'-10" | 12'-4" | 11'-5" | 10'-9" |
| 75.0 | 7'-3" | 6'-9" | 6'-4" | 6'-8" | 9'-7" | 8'-10" | 8'-4" | 8'-8" | 13'-3" | 12'-3" | 11'-7" | 12'-1" | 11'-2" | 10'-6" |
| 80.0 | 7'-2" | 6'-7" | 6'-3" | 6'-6" | 9'-4" | 8'-8" | 8'-2" | 8'-6" | 12'-11" | 12'-0" | 11'-4" | 11'-10" | 10'-11" | 10'-4" |
| 85.0 | 7'-0" | 6'-6" | 6'-1" | 6'-4" | 9'-2" | 8'-6" | 8'-0" | 8'-4" | 12'-8" | 11'-9" | 11'-1" | 11'-7" | 10'-9" | 10'-1" |
| 90.0 | 6'-10" | 6'-4" | 6'-0" | 6'-3" | 9'-0" | 8'-4" | 7'-10" | 8'-2" | 12'-5" | 11'-7" | 10'-11" | 11'-4" | 10'-6" | 9'-11" |
| 95.0 | 6'-9" | 6'-3" | 5'-10" | 6'-2" | 8'-10" | 8'-2" | 7'-9" | 8'-1" | 12'-3" | 11'-4" | 10'-8" | 11'-2" | 10'-4" | 9'-9" |
| 100.0 | 6'-7" | 6'-2" | 5'-9" | 6'-0" | 8'-8" | 8'-0" | 7'-7" | 7'-11" | 12'-0" | 11'-2" | 10'-6" | 10'-11" | 10'-2" | 9'-7" |
| 105.0 | 6'-6" | 6'-1" | 5'-7" | 5'-11" | 8'-6" | 7'-11" | 7'-6" | 7'-9" | 11'-10" | 11'-0" | 10'-4" | 10'-9" | – | – |
| 110.0 | 6'-5" | 5'-11" | 5'-5" | 5'-10" | 8'-5" | 7'-10" | 7'-4" | 7'-8" | 11'-8" | 10'-10" | 10'-2" | 10'-7" | – | – |
| 115.0 | 6'-4" | 5'-10" | 5'-4" | 5'-8" | 8'-3" | 7'-8" | 7'-3" | 7'-7" | 11'-6" | 10'-8" | 10'-0" | 10'-5" | – | – |
| 120.0 | 6'-3" | 5'-9" | 5'-3" | 5'-7" | 8'-2" | 7'-7" | 7'-2" | 7'-5" | 11'-4" | 10'-6" | 9'-11" | 10'-4" | – | – |
| 125.0 | 6'-2" | 5'-7" | 5'-1" | 5'-5" | 8'-1" | 7'-6" | 7'-0" | 7'-4" | 11'-2" | 10'-4" | 9'-9" | 10'-2" | – | – |
| 130.0 | 6'-1" | 5'-6" | 5'-0" | 5'-4" | 7'-11" | 7'-5" | 6'-11" | 7'-3" | 11'-0" | 10'-3" | 9'-8" | 10'-0" | – | – |
| 135.0 | 6'-0" | 5'-5" | 4'-11" | 5'-3" | 7'-10" | 7'-3" | 6'-10" | 7'-2" | 10'-11" | 10'-1" | 9'-6" | 9'-11" | – | – |
| 140.0 | 5'-11" | 5'-3" | 4'-10" | 5'-2" | 7'-9" | 7'-2" | 6'-9" | 7'-1" | 10'-9" | 10'-0" | 9'-5" | 9'-10" | – | – |
| 145.0 | 5'-10" | 5'-2" | 4'-9" | 5'-1" | 7'-8" | 7'-1" | 6'-8" | 7'-0" | 10'-7" | 9'-10" | 9'-3" | 9'-8" | – | – |
| 150.0 | 5'-9" | 5'-1" | 4'-8" | 5'-0" | 7'-7" | 7'-0" | 6'-7" | 6'-11" | 10'-6" | 9'-9" | 9'-2" | 9'-7" | – | – |
| 155.0 | 5'-7" | 5'-0" | 4'-7" | 4'-11" | 7'-6" | 7'-0" | 6'-7" | 6'-10" | 10'-5" | 9'-8" | 9'-1" | 9'-6" | – | – |
| 160.0 | 5'-6" | 4'-11" | 4'-6" | 4'-10" | 7'-5" | 6'-11" | 6'-6" | 6'-9" | 10'-3" | 9'-7" | 9'-0" | 9'-4" | – | – |
| 165.0 | 5'-5" | 4'-10" | 4'-5" | 4'-9" | 7'-4" | 6'-10" | 6'-5" | 6'-8" | 10'-2" | 9'-5" | 8'-10" | 9'-3" | – | – |
| 170.0 | 5'-4" | 4'-10" | 4'-5" | 4'-8" | 7'-3" | 6'-9" | 6'-4" | 6'-8" | 10'-1" | 9'-4" | 8'-9" | 9'-2" | – | – |
| 175.0 | 5'-3" | 4'-9" | 4'-4" | 4'-7" | 7'-2" | 6'-8" | 6'-4" | 6'-7" | 10'-0" | 9'-3" | 8'-7" | 9'-1" | – | – |
| 180.0 | 5'-3" | 4'-8" | 4'-3" | 4'-6" | 7'-2" | 6'-7" | 6'-3" | 6'-6" | 9'-11" | 9'-2" | 8'-6" | 9'-0" | – | – |
| 185.0 | 5'-2" | 4'-7" | 4'-2" | 4'-6" | 7'-1" | 6'-7" | 6'-2" | 6'-5" | 9'-10" | 9'-1" | 8'-4" | 8'-11" | – | – |
| 190.0 | 5'-1" | 4'-6" | 4'-2" | 4'-5" | 7'-0" | 6'-6" | 6'-1" | 6'-5" | 9'-9" | 9'-0" | 8'-3" | 8'-9" | – | – |
| 195.0 | 5'-0" | 4'-6" | 4'-1" | 4'-4" | 6'-11" | 6'-5" | 6'-1" | 6'-4" | 9'-8" | 8'-11" | 8'-2" | 8'-8" | – | – |

NOTES : REFER TO ELEVATIONS ON SHEET 1A OF 14

1–. FOR MULLIONS INSTALLED W/O STORM BARS

A) MULLION SPACING SHALL BE SUCH THAT MAXIMUM SLAT SPAN SHALL NOT BE EXCEEDED

2–. FOR MULLIONS INSTALLED W/ STORM BARS & HEADERS

A) MULLION SPACING SHALL BE SUCH THAT MAXIMUM HEADER SPAN SHALL NOT BE EXCEEDED

B) STORM BAR SPACING SHALL BE SUCH THAT MAXIMUM SLAT SPAN SHALL NOT BE EXCEEDED

06-0710.02

F.BC. (High Velocity Hurricane Zone)

JUN 19 2006


TILLECO INC.
TILLIT TESTING & ENGINEERING COMPANY
6355 N.W. 36th. St., Ste. 305 – VIRGINIA GARDENS, FL 33166
Phone : (305)871-1530 . Fax : (305)871-1531
EB-0006719
WALTER A. TILLIT Jr., P. E.
FLORIDA Lic. # 44167


ASSA/60mm BERTHA ROLL-UP


WEST PALM INSTALLERS, INC.
(ASSA # 332)
6819 NW 84TH AVENUE
DORAL, FL 33166
PH.:(305)406-3575, FAX:(305)406-3576


| REV. No | DESCRIPTION | DATE | REV. No | DESCRIPTION | DATE |
|---|---|---|---|---|---|
| 1 | – | – | 3 | | |
| 2 | | | 4 | | |

DRAWN BY: S.M.

6/16/06 DATE

06-160 DRAWING No

SHEET 14 OF 14