MIAMI-DADE COUNTY
BUILDING CODE COMPLIANCE OFFICE (BCCO)
PRODUCT CONTROL DIVISION

MIAMI-DADE COUNTY, FLORIDA
METRO-DADE FLAGLER BUILDING

140 WEST FLAGLER STREET, SUITE 1603
MIAMI, FLORIDA 33130-1563
(305) 375-2901 FAX (305) 372-6339
www.miamidade.gov/buildingcode

NOTICE OF ACCEPTANCE (NOA)

J & E Glass Solution, Inc.
13067 NW 42 Ave.
Opa locka, Florida 33054

SCOPE:
This NOA is being issued under the applicable rules and regulations governing the use of construction materials. The documentation submitted has been reviewed by Miami-Dade County Product Control Division and accepted by the Board of Rules and Appeals (BORA) to be used in Miami Dade County and other areas where allowed by the Authority Having Jurisdiction (AHJ).

This NOA shall not be valid after the expiration date stated below. The Miami-Dade County Product Control Division (In Miami Dade County) and/or the AHJ (in areas other than Miami Dade County) reserve the right to have this product or material tested for quality assurance purposes. If this product or material fails to perform in the accepted manner, the manufacturer will incur the expense of such testing and the AHJ may immediately revoke, modify, or suspend the use of such product or material within their jurisdiction. BORA reserves the right to revoke this acceptance, if it is determined by Miami-Dade County Product Control Division that this product or material fails to meet the requirements of the applicable building code.

This product is approved as described herein, and has been designed to comply with the High Velocity Hurricane Zone of the Florida Building Code.

DESCRIPTION: " HPMA / Performance System 1 " Accordion Shutter

APPROVAL DOCUMENT: Drawing No. 06-117, titled "Performance System 1 Accordion Shutter", sheets 1 through 6 of 6, prepared by Tilteco, Inc., dated May 04, 2006, signed and sealed by Walter A. Tillit Jr., P.E., bearing the Miami-Dade County Product Control approval stamp with the Notice of Acceptance number and approval date by the Miami-Dade County Product Control Division.

MISSILE IMPACT RATING: Large and Small Missile Impact

LABELING: Each unit shall bear a permanent label with the manufacturer's name or logo, city, state and the following statement: "Miami-Dade County Product Control Approved", unless otherwise noted herein.

RENEWAL of this NOA shall be considered after a renewal application has been filed and there has been no change in the applicable building code negatively affecting the performance of this product.

TERMINATION of this NOA will occur after the expiration date or if there has been a revision or change in the materials, use, and/or manufacture of the product or process. Misuse of this NOA as an endorsement of any product, for sales, advertising or any other purposes shall automatically terminate this NOA. Failure to comply with any section of this NOA shall be cause for termination and removal of NOA.

ADVERTISEMENT: The NOA number preceded by the words Miami-Dade County, Florida, and followed by the expiration date may be displayed in advertising literature. If any portion of the NOA is displayed, then it shall be done in its entirety.

INSPECTION: A copy of this entire NOA shall be provided to the user by the manufacturer or its distributors and shall be available for inspection at the job site at the request of the Building Official.

This NOA consists of this page 1; evidence submitted page E-1 as well as approval document mentioned above. The submitted documentation was reviewed by **Carlos M. Utrera, P.E.**

PRODUCT CONTROL ACCEPTED

11/10/08

NOA No 06-0710.06
Expiration Date: 04/12/2012
Approval Date: 04/12/2007
Page 1

NOTICE OF ACCEPTANCE: EVIDENCE SUBMITTED

A. DRAWINGS

1. *Drawing No. 06-117, sheets 1 through 6 of 6, titled "Performance System 1 Accordion Shutter", prepared by Tilteco Inc., dated May 4, 2006, signed and sealed by Walter A. Tillit Jr., P.E.*

B. TESTS

1. *See Association's generic approval under 05-0323.*

C. CALCULATIONS

1. *See Association's generic approval under 05-0323.*

D. QUALITY ASSURANCE

1. *by Miami-Dade County Building Code Compliance Office.*

E. MATERIAL CERTIFICATIONS

1. *See Association's generic approval under 05-0323.*

F. STATEMENTS

1. *Release letter issued by the Hurricane Protection Manufactures Association, Inc., received by our office on June 27, 2006, and signed by Jeffrey T. Robinson, President of the Association, certifying that this product meets the criteria of the product tested under their auspices, and approved under Miami-Dade County Approval No. 05-0323.*
2. *Acknowledgment Letter issued by H.P.M.A. dated April 18, 2006, signed by Mr. Enrique Revilla, V. P. of the Association, to confirm, that J & E Glass Solution, Inc., is currently a H.P.M.A. member in good standing.*
3. *Acknowledgment Letter issued by J & E Glass Solution, Inc., dated June 20, 2006, acknowledging that they are applying under the auspice of the H.P.M.A. master file No. 05-0323, signed by Oscar Villa, President.*
4. *Letter issued by Tilteco Inc., dated on June 22, 2006, certifying that the drawing (No. 06-117) prepared for J & E Glass Solution, Inc., signed and sealed by Mr. Walter A. Tillit, Jr., P.E., is engineering wise completely identical to H.P.M.A. Miami Dade Approved generic drawing (No. 05-118).*

11/10/08

Carlos M. Utrera, P. E.
Product Control Examiner
NOA No 06-0710.06
Expiration Date: 04/12/2012
Approval Date: 04/12/2007

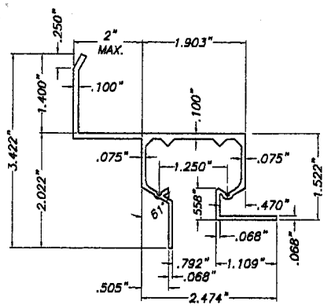

(A) WALL HEADER (& INVERTED)
SCALE : 3/8" = 1"

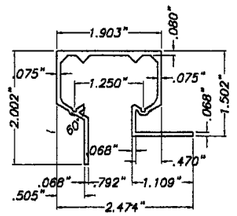

(B) CEILING HEADER
SCALE : 3/8" = 1"

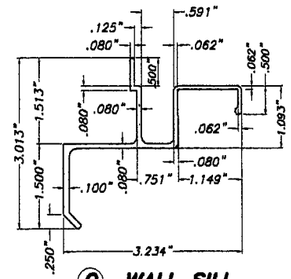

(C) WALL SILL
SCALE : 3/8" = 1"

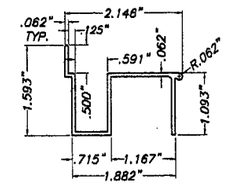

(D) FLOOR SILL
SCALE : 3/8" = 1"

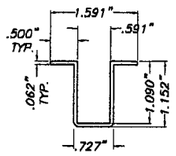

(D1) FLOOR SILL
SCALE : 3/8" = 1"

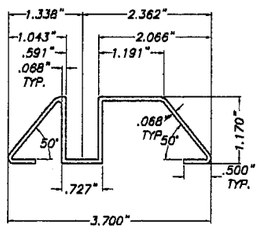

(D2) THRESHOLD TRACK
SCALE : 3/8" = 1"

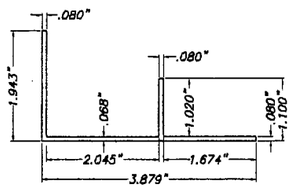

(E) ADJUSTABLE SILL ADAPTOR
SCALE : 3/8" = 1"

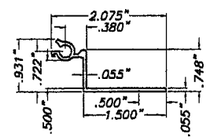

(F) 90° STARTER
SCALE: 3/8" = 1"

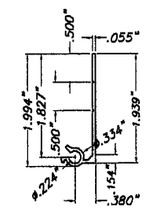

(F1) 180° MALE STARTER
SCALE: 3/8" = 1"

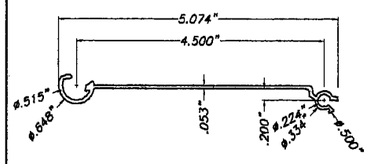

(G) MALE/FEMALE BLADE
SCALE: 3/8" = 1"

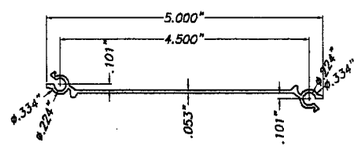

(G1) MALE/MALE BLADE
SCALE: 3/8" = 1"

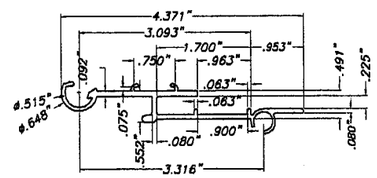

(H) FEMALE CENTERMATE BLADE
SCALE: 3/8" = 1"

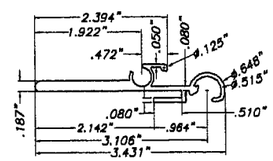

(H1) MALE CENTERMATE BLADE
SCALE: 3/8" = 1"

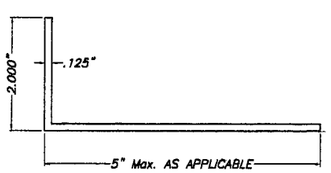

(I) ALUMINUM ANGLE
SCALE: 3/8" = 1"

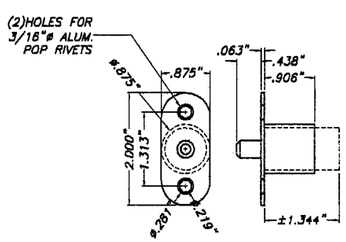

(J) BRASS NICKEL PLATED PUSH BUTTON LOCK

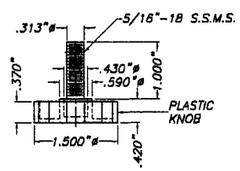

(J1) 5/16"øx1" S.S.M.S. W/PLASTIC KNOB LOCK

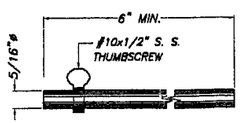

(K) LOCKING PIN (OPTIONAL)
SCALE: 3/8" = 1"

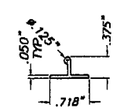

(L) INTERIOR HANDLE (OPTIONAL)
SCALE: 3/8" = 1"

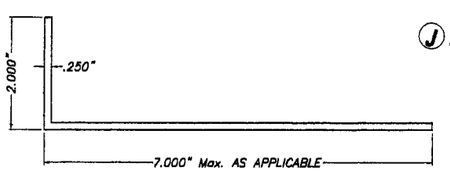

(I1) ALUMINUM ANGLE
SCALE: 3/8" = 1"

GENERAL NOTES:

1. ACCORDION SHUTTER SHOWN ON THIS PRODUCT APPROVAL DOCUMENT HAS BEEN VERIFIED FOR CODE COMPLIANCE IN ACCORDANCE WITH THE 2004 EDITION OF THE FLORIDA BUILDING CODE.
DESIGN WIND LOADS SHALL BE DETERMINED AS PER SECTION 1620 OF THE ABOVE MENTIONED CODE. IN ORDER TO VERIFY THAT ANCHORS ON THIS P.A.D., AS TESTED, WERE NOT OVER STRESSED, A 33% INCREASE IN ALLOWABLE LOADS FOR WIND LOADS WAS NOT USED IN THEIR ANALYSIS. HOWEVER, FOR LAG SCREWS INTO WOOD, A 1.60 WIND LOAD DURATION FACTOR WAS USED TO CALCULATE SCREWS SPACINGS.
ACCORDION SHUTTER'S ADEQUACY FOR IMPACT AND FATIGUE RESISTANCE HAS BEEN VERIFIED IN ACCORDANCE WITH SECTION 1609.1.4 OF THE ABOVE MENTIONED CODE PER TAS-201, TAS-202, AND TAS-203 AS PER CTL REPORT N° 00-060.

2. STAINLESS STEEL SHEET METAL SCREWS USED AT LOUVER PIN SHALL BE # 14 x 3". 410-HT MINIMUM SERIES W/ 135.0 ksi YIELD STRENGTH & 180 ksi TENSILE STRENGTH. SCREWS SHALL BE COATED WITH XYLAN 5000 SERIES FLUOROPOLYMER COATINGS AS MANUFACTURED BY WHITFORD Co, BOX 507. WEST CHESTER PA. 19381.

3. ALL ALUMINUM EXTRUSIONS SHALL BE 6061-T6, 6005-T5 OR 6105-T5 ALLOY WITH MINIMUM YIELD STRENGTH OF Fy=35.0 ksi.

4. ALL SCREWS TO BE STAINLESS STEEL 304 OR 316 SERIES W/ 50 ksi YIELD STRENGTH AND 90 ksi TENSILE STRENGTH OR CORROSION RESISTANT COATED CARBON STEEL AS PER DIN 50018.

5. ALL ALUMINUM POP RIVETS TO BE 5052 ALUMINUM ALLOY WITH ALUMINUM MANDREL.

6. BOLTS TO BE 2024-T4 ALUMINUM ALLOY GALVANIZED OR STAINLESS STEEL WITH 35 ksi MINIMUM MINIMUM YIELD STRENGTH.

7. ANCHORS TO WALL SHALL BE AS FOLLOWS: (UNLESS OTHERWISE NOTED)

(A) TO EXISTING POURED CONCRETE:
- 1/4" ø TAPCON AND 1/4"ø MAXI-SET TAPCON, AS MANUFACTURED BY I.T.W. BUILDEX.
- 1/4" ø CRETE FLEX SS4 ANCHORS, AS MANUFACTURED BY ELCO TEXTRON.
- 1/4" ø x 7/8" CALK-IN ANCHORS AS MANUFACTURED BY POWERS FASTENERS, INC.

NOTES:

A.1) MINIMUM EMBEDMENT OF TAPCON ANCHORS AND CRETE FLEX SS4 ANCHORS INTO CONCRETE IS 1 3/4".

A.2) 7/8" CALK-IN ANCHORS SHALL BE ENTIRELY EMBEDDED INTO THE POURED CONCRETE. NO EMBEDMENT INTO STUCCO SHALL BE PERMITTED. 1/4" ø-20 SCREWS USED SHALL BE 1 1/2" LONG MINIMUM SHOULD STUCCO EXIST.

A.3) IN CASE THAT PRECAST STONE, PRECAST CONCRETE PANELS, OR PAVERS BE FOUND ON THE EXISTING WALL FLOOR, ANCHORS SHALL BE LONG ENOUGH TO REACH THE MAIN STRUCTURE BEHIND SUCH PANELS. ANCHORAGE SHALL BE AS INDICATED ON NOTES A.1 & A.2 ABOVE.

(B) TO EXISTING CONCRETE BLOCK WALL:
- 1/4" ø TAPCON AND 1/4"ø MAXI-SET TAPCON, AS MANUFACTURED BY I.T.W. BUILDEX.
- 1/4" ø CRETE FLEX SS4 ANCHORS, AS MANUFACTURED BY ELCO TEXTRON.
- 1/4" ø x 7/8" CALK-IN ANCHORS AS MANUFACTURED BY POWERS FASTENERS, INC.

NOTES:

B.1) MINIMUM EMBEDMENT OF TAPCON ANCHORS, AND CRETE FLEX SS4 ANCHORS INTO THE CONCRETE BLOCK UNIT SHALL BE 1 1/4".

B.2) 7/8" CALK-IN ANCHORS SHALL BE ENTIRELY EMBEDDED INTO THE CONCRETE BLOCK UNIT. NO EMBEDMENT INTO STUCCO SHALL BE PERMITTED. 1/4" ø-20 SCREWS USED SHALL BE 1 1/2" LONG MINIMUM SHOULD STUCCO EXIST AND 1" MINIMUM FOR WALLS WITH NO STUCCO.

B.3) IN CASE THAT PRECAST STONE OR PRECAST CONCRETE PANELS BE FOUND ON THE EXISTING WALL, ANCHORS SHALL BE LONG ENOUGH TO REACH THE MAIN STRUCTURE BEHIND SUCH PANELS. ANCHORAGE SHALL BE 1 1/4" MINIMUM FOR ANCHORS MENTIONED IN B.1.), & 7/8" FOR ANCHORS MENTIONED IN B.2.).

(C) ANCHORS SHALL BE INSTALLED FOLLOWING ALL OF THE RECOMMENDATIONS AND SPECIFICATIONS OF THE ANCHOR'S MANUFACTURER.

8. SHUTTER'S COMPONENTS ARE PATENT PENDING.

9. IT SHALL BE THE RESPONSIBILITY OF THE CONTRACTOR TO VERIFY THE SOUNDNESS OF THE STRUCTURE WHERE SHUTTER IS TO BE ATTACHED TO INSURE PROPER ANCHORAGE. THIS SHUTTER SHALL ONLY BE ATTACHED TO CONCRETE, BLOCK OR WOOD FRAME BUILDINGS.

10. A PERMANENT SHUTTER MANUFACTURER'S LABEL SHALL BE PLACED ON THE EXPOSED SURFACE OF THE FEMALE CENTERMATE BLADE (COMPONENT (H)).
ONE LABEL SHALL BE PLACED FOR EVERY OPENING. LABEL SHALL READ AS FOLLOWS:
"PERFORMANCE SYSTEM 1 ACCORDION SHUTTER"
J & E GLASS SOLUTIONS, INC.
OPA LOCKA, FLORIDA
MIAMI-DADE COUNTY PRODUCT CONTROL APPROVED.

11. (a) THIS PRODUCT APPROVAL DOCUMENT (P.A.D.) PREPARED BY THIS ENGINEER IS GENERIC AND DOES NOT PROVIDE INFORMATION FOR A SITE SPECIFIC PROJECT; i.e. WHERE THE SITE CONDITIONS DEVIATE FROM THE P.A.D.

(b) CONTRACTOR TO BE RESPONSIBLE FOR THE SELECTION, PURCHASE AND INSTALLATION
INCLUDING LIFE SAFETY OF THIS PRODUCT BASED ON THIS PRODUCT APPROVAL PROVIDED
HE/SHE DOES NOT DEVIATE FROM THE CONDITIONS DETAILED ON THIS DOCUMENT. CONSTRUCTION SAFETY AT SITE IS THE CONTRACTOR'S RESPONSIBILITY.

(c) THIS PRODUCT APPROVAL DOCUMENT WILL BE CONSIDERED INVALID IF MODIFIED.

(d) SITE SPECIFIC PROJECTS SHALL BE PREPARED BY A FLORIDA REGISTERED ENGINEER OR ARCHITECT WHICH WILL BECOME THE ENGINEER OF RECORD (E.O.R.) FOR THE PROJECT AND WHO WILL BE RESPONSIBLE FOR THE PROPER USE OF THE P.A.D. ENGINEER OF RECORD, ACTING AS DELEGATED ENGINEER TO THE P.A.D. ENGINEER, SHALL SUBMIT TO THIS LATTER THE SITE SPECIFIC DRAWINGS FOR REVIEW.

(e) THIS P.A.D. SHALL BEAR THE DATE AND ORIGINAL SEAL AND SIGNATURE OF THE PROFESSIONAL ENGINEER THAT PREPARED IT.

Approved as complying with the Florida Buiding Code
Date 04/12/2007
NOA# 06-0710.06
Miami Dade Product Control Division
By

F.B.C. (High Velocity Hurricane Zone)

COMPONENTS

JUN 21 2006

TILTECO INC.
TILLIT TESTING & ENGINEERING COMPANY
6355 N.W. 36th. St., Ste. 305, VIRGINIA GARDENS, FL 33166
Phone : (305)871-1530 . Fax : (305)871-1531
EB-0006719
WALTER A. TILLIT Jr. P. E.
FLORIDA Lic. # 44167

PERFORMANCE SYSTEM 1 ACCORDION SHUTTER

J & E GLASS SOLUTIONS, INC.
(NFMA # 24)
13067 NW 42ND AVENUE
OPA LOCKA, FLORIDA 33054
PH.:(305)769-5553, FAX:(305)769-5553

REV. No	DESCRIPTION	DATE	REV. No	DESCRIPTION	DATE
1	-	-	3	-	-
2	-	-	4	-	-

DRAWN BY: S.M.
DATE: 5/4/06
DRAWING No: 06-117
SHEET 1 OF 6

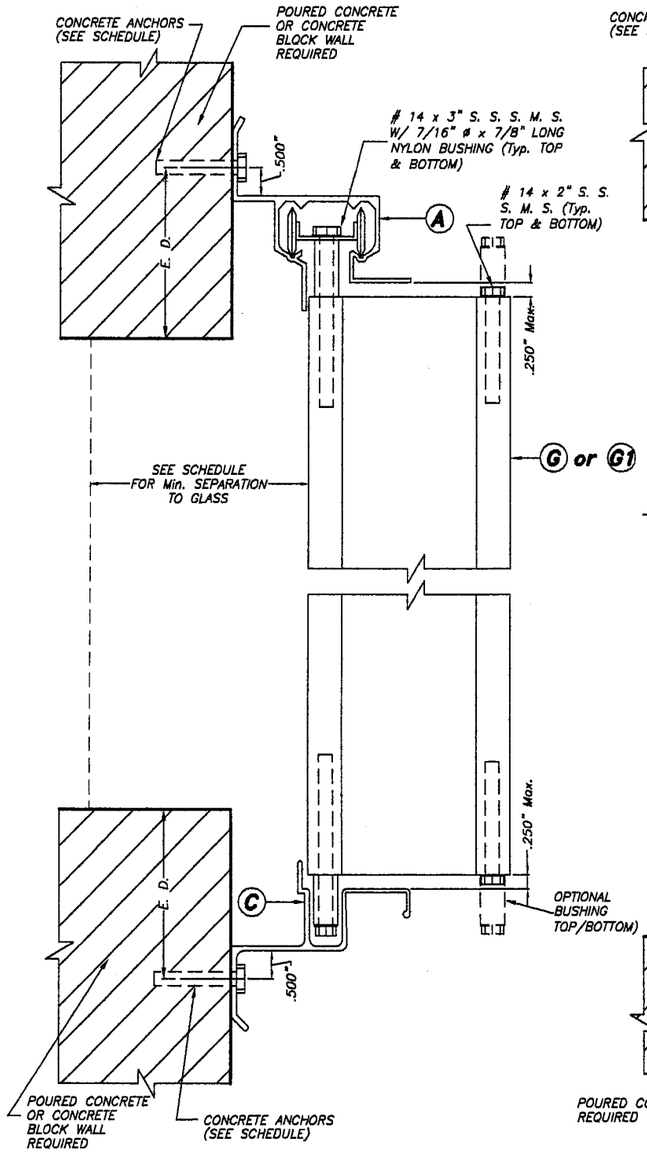

WALL MOUNTING INSTALLATION SECTION A

SCALE : 3/8" = 1"

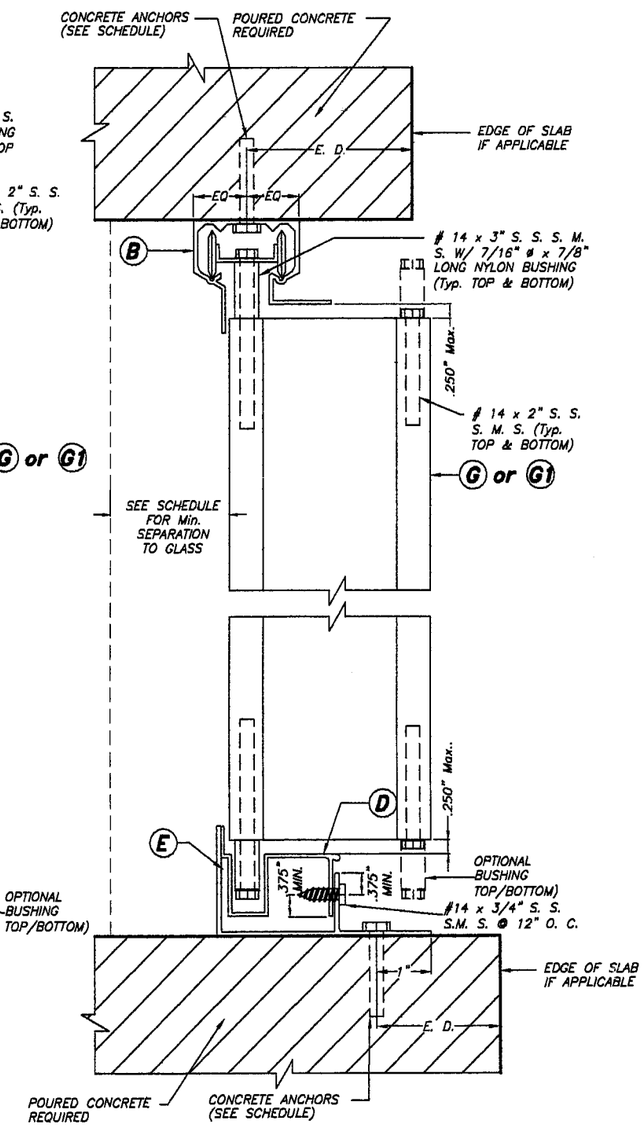

CEILING & FLOOR MOUNTING INSTALLATION SECTION B

SCALE : 3/8" = 1"

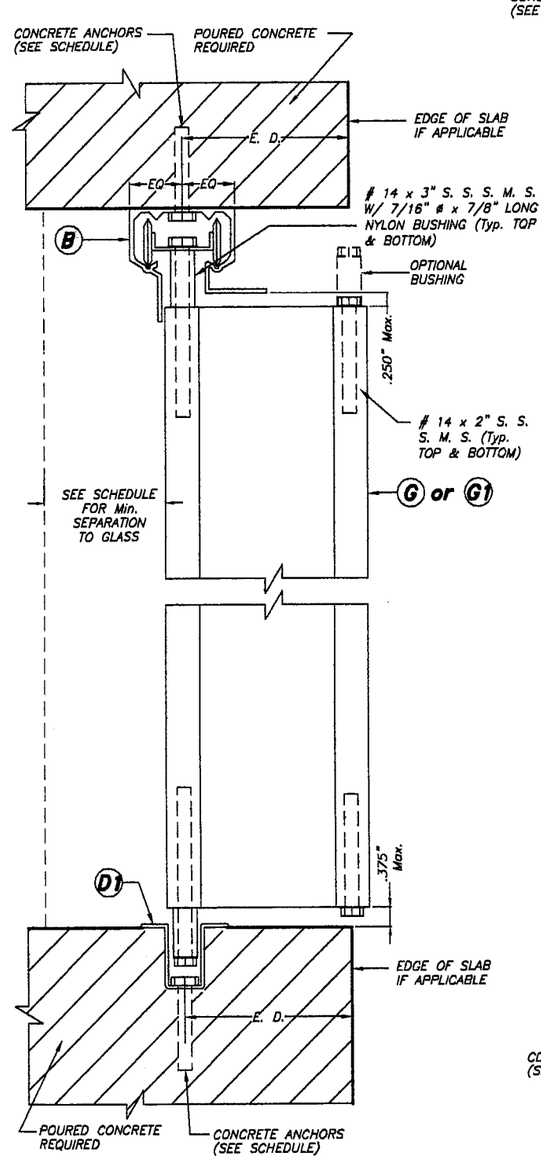

CEILING & FLOOR MOUNTING INSTALLATION SECTION B1

SCALE : 3/8" = 1"

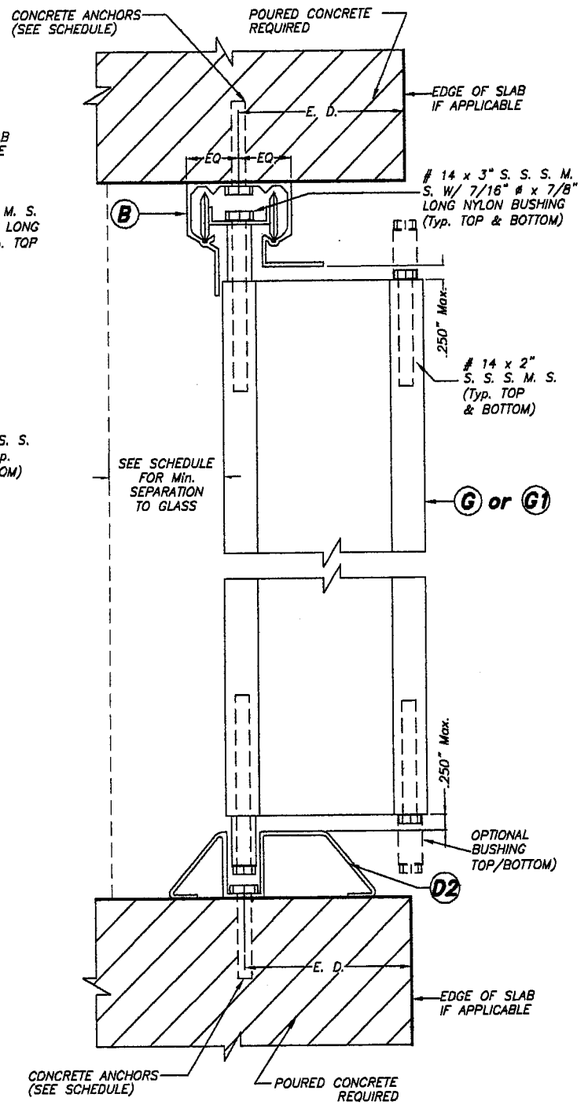

CEILING & FLOOR MOUNTING INSTALLATION SECTION B2

SCALE : 3/8" = 1"

Approved as complying with the Florida Building Code
Date 04/12/2007
NOA# 06-0710.06
Miami Dade Product Control Division
By

F.B.C. (High Velocity Hurricane Zone)

JUN 21 2006

TILTECO INC.
TILLIT TESTING & ENGINEERING COMPANY
6355 N.W. 36th. St., Ste. 305, VIRGINIA GARDENS, Fl. 33166
Phone : (305)871-1530 . Fax : (305)871-1531
EB-0006719
WALTER A. TILLIT Jr. P. E.
FLORIDA Lic. # 44167

PERFORMANCE SYSTEM 1 ACCORDION SHUTTER

J & E GLASS SOLUTIONS, INC.
(HPMA # 24)
13067 NW 42ND AVENUE
OPA LOCKA, FLORIDA 33054
PH.:(305)769-5553, FAX:(305)769-5553

REV. No	DESCRIPTION	DATE	REV. No	DESCRIPTION	DATE
1	–	–	3	–	–
2	–	–	4	–	–

DRAWN BY: S.M.
5/4/06 DATE
06-117 DRAWING No
SHEET 2 OF 6

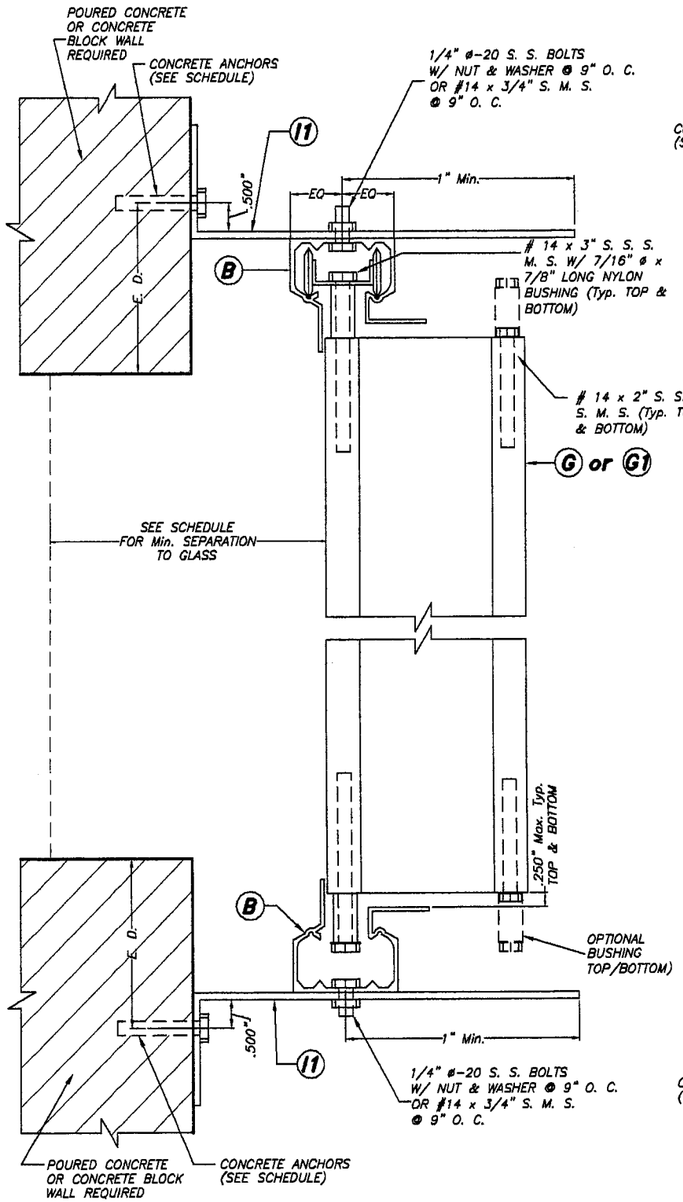

BUILD-OUT INSTALLATION – SECTION C

SCALE : 3/8" = 1"

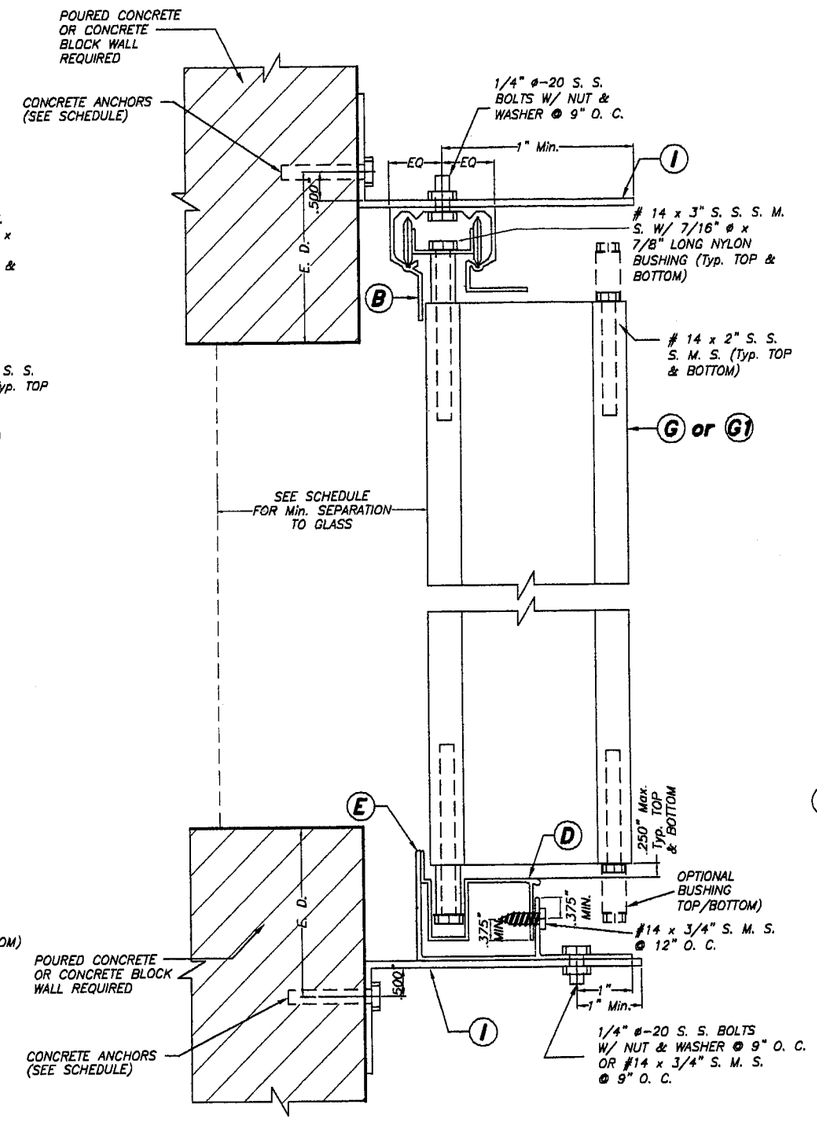

BUILD-OUT INSTALLATION – SECTION C1

SCALE : 3/8" = 1"

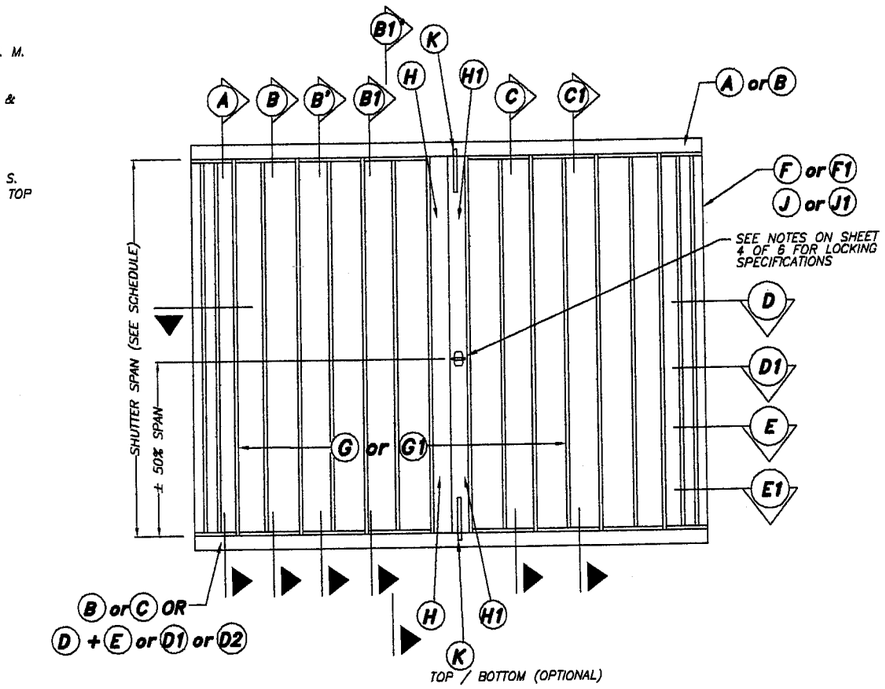

TYPICAL ELEVATION

N. T. S.

Approved as complying with the Florida Building Code
Date 04/12/2007
NOA# 06-0710.06
Miami Dade Product Control Division
By

F.B.C. (High Velocity Hurricane Zone)

JUN 21 2006

TILTECO INC.
TILLIT TESTING & ENGINEERING COMPANY
6355 N.W. 36th. St., Ste. 305, VIRGINIA GARDENS, Fl. 33166
Phone : (305)871-1530 . Fax : (305)871-1531
EB-0006719
WALTER A. TILLIT Jr. P. E.
FLORIDA Lic. # 44167

PERFORMANCE SYSTEM 1 ACCORDION SHUTTER

J & E GLASS SOLUTIONS, INC.
(HPMA # 24)
13067 NW 42ND AVENUE
OPA LOCKA, FLORIDA 33054
PH.:(305)769-5553, FAX:(305)769-5553

REV. No	DESCRIPTION	DATE	REV. No	DESCRIPTION	DATE
1	–	–	3	–	–
2	–	–	4	–	–

DRAWN BY: S.M.
5/4/06 DATE
06-117 DRAWING No
SHEET 3 OF 6

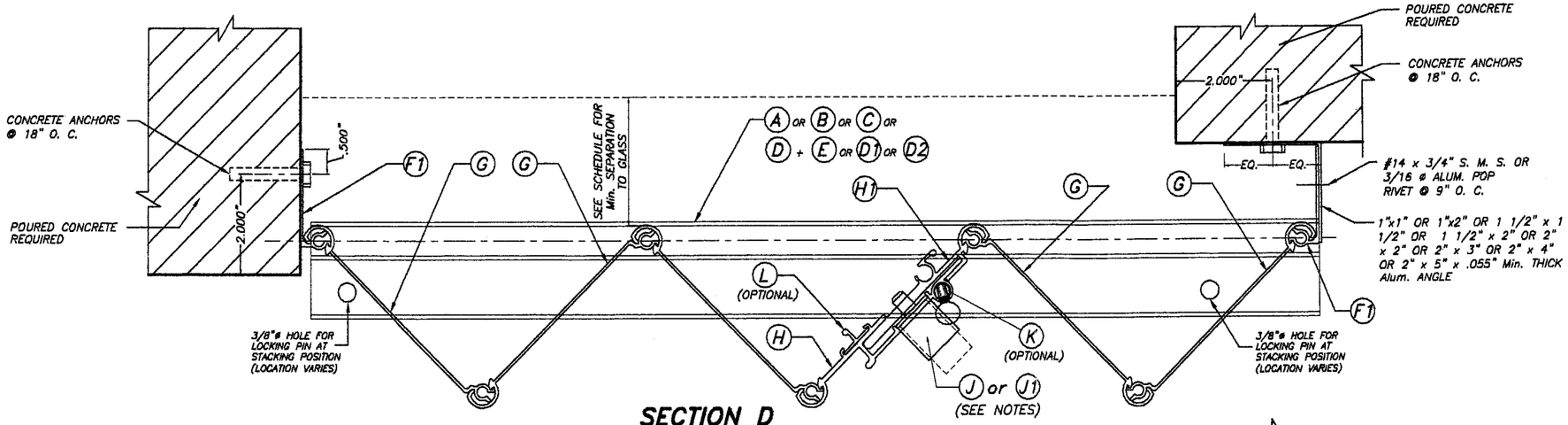

SECTION D

SCALE : 3/8" = 1"

NOTES FOR LOCKING OF (H) & (H1)

1–PUSH BOTTOM LOCK (J) MAY BE USED FOR INSTALLATIONS SECURED FROM THE OUTSIDE OR INSIDE OF SHUTTER. WHEN INSTALLING (J) FROM THE OUTSIDE, A 7/8"ø HOLE SHALL BE DRILLED AT (H) AND (J) MUST BE RIVETED FROM THE BACK OF (H) TO THE FRONT W/ (2)3/16"ø ALUM. POP RIVETS. A 3/8"ø HOLE MUST THEN BE DRILLED AT (H1) TO ALLOW FOR (J)'S PIN TO PASS THRU.
WHEN INSTALLING (J) FROM THE INSIDE, (J) MUST BE RIVETED TO (H1) W/(2)3/16"ø ALUM. POP RIVETS. A 3/8"ø HOLE MUST THEN BE DRILLED THRU (H) AND (H1) TO ALLOW FOR (J)'S PIN TO PASS THRU.

2–5/16"x1" LOCK (J1) MAY BE USED ALTERNATIVELLY TO (J) LOCK FOR INSTALLATIONS SECURED FROM THE OUTSIDE OR INSIDE OF SHUTTER. IN THIS CASE, A 5/16"ø HOLE SHALL BE DRILLED THRU (H) AND (H1). HOLE DRILLED TO (H1) SHALL BE TAPPED TO ACCEPT 18 THREADS PER INCH MACHINE SCREW.

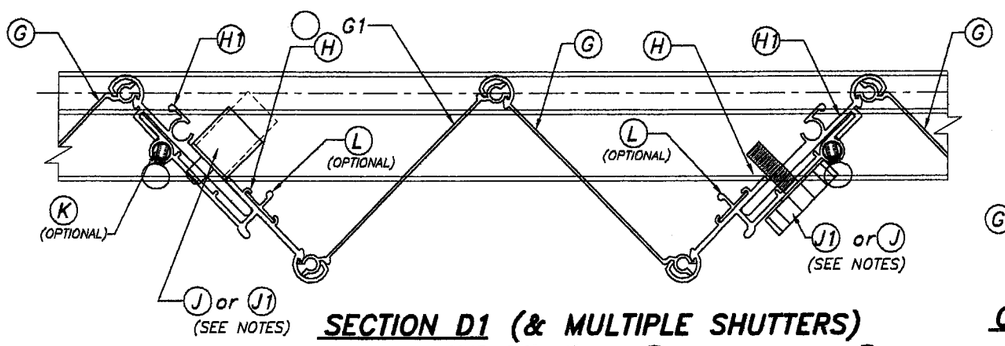

SECTION D1 (& MULTIPLE SHUTTERS)

SCALE : 3/8" = 1"

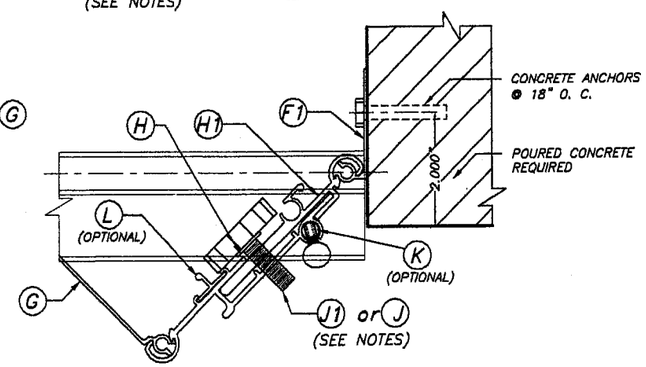

ONE SIDED SECTION : END CONNECTION DETAIL

SCALE : 3/8" = 1"

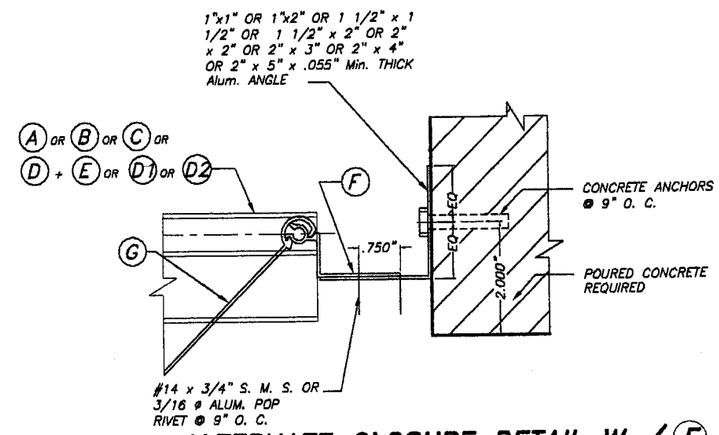

ALTERNATE CLOSURE DETAIL W / (F)

SCALE : 3/8" = 1"

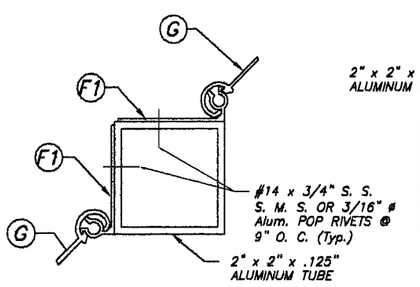

SECTION E

SCALE : 3/8" = 1"

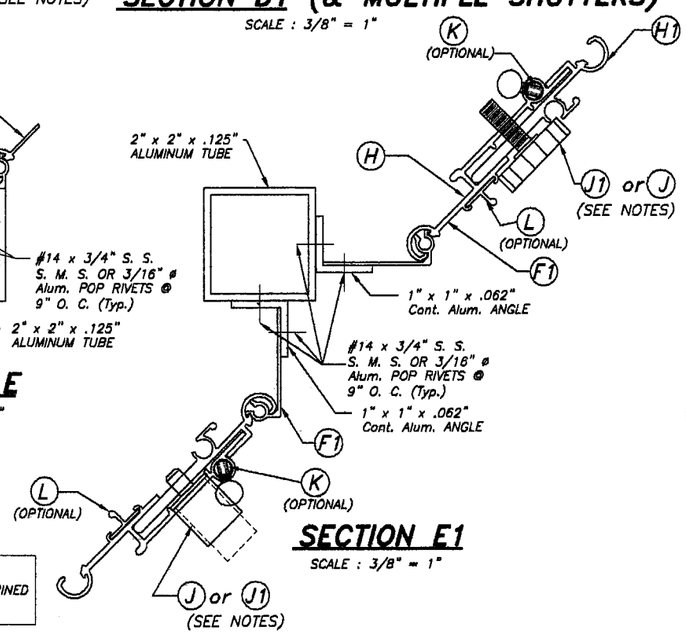

SECTION E1

SCALE : 3/8" = 1"

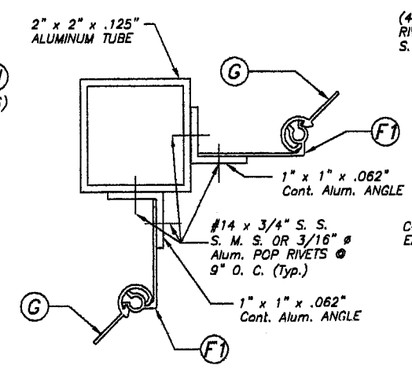

SECTION E2

SCALE : 3/8" = 1"

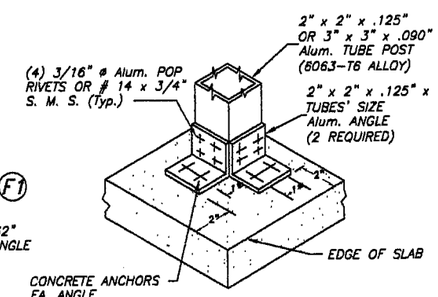

ISOMETRIC (CORNER POST)

(Typ. AT TOP & BOTTOM SLABS)

NOTE :
SECTIONS SHOWN CAN BE COMBINED TO SUIT ANY INSTALLATION.

Approved as complying with the Florida Building Code
Date 04/12/2007
NOA# 06-0710.06
Miami Dade Product Control Division
By

F.B.C. (High Velocity Hurricane Zone)

JUN 21 2006

TILTECO INC.
TILLIT TESTING & ENGINEERING COMPANY
6355 N.W. 36th. St., Ste. 305, VIRGINIA GARDENS, Fl. 33166
Phone : (305)871–1530 . Fax : (305)871–1531
EB–0006719
WALTER A. TILLIT Jr. P. E.
FLORIDA Lic. # 44167

PERFORMANCE SYSTEM 1 ACCORDION SHUTTER

J & E GLASS SOLUTIONS, INC.
(HPMA # 24)
13067 NW 42ND AVENUE
OPA LOCKA, FLORIDA 33054
PH.:(305)769–5553, FAX:(305)769–5553

REV. No	DESCRIPTION	DATE	REV. No	DESCRIPTION	DATE
1	–	–	3	–	–
2	–	–	4	–	–

DRAWN BY: S.M.
5/4/06 DATE
06–117 DRAWING No
SHEET 4 OF 6

MAXIMUM DESIGN PRESSURE RATING "W" (p.s.f.) AND CORRESPONDING MAXIMUM SPAN "L" SCHEDULE.

(VALID FOR SECTIONS A, B, B1, B2, C & C1 ON SHEET 2 & 3).

NOTE:
DESIGN PRESSURE RATING CORRESPONDS ONLY TO NEGATIVE PRESSURE (SUCTION) LOADS, IN ACCORDANCE WITH ASCE 7-98 CRITERIA FOR A GIVEN OPENING. IF NEGATIVE PRESSURE VALUES COMPLY WITH THE REQUIRED PRESSURE FOR THE OPENING, THE POSITIVE PRESSURE WILL AUTOMATICALLY QUALIFY AND NEED NOT TO BE CHECKED.

MAXIMUM DESIGN LOAD "W" (p.s.f.)	MAXIMUM SHUTTER SPAN FOR SECTIONS "L" (ft.)		MINIMUM SEPARATION TO GLASS (in.) ALL SECTIONS	
	B, B1, B2 C & C1	A	*	**
40	14'-1"	12'-5"	3"	3"
45	13'-8"	11'-8"	3"	3"
50	13'-0"	11'-1"	3"	3"
55	12'-5"	10'-7"	2 3/4"	2 1/2"
60	11'-10"	10'-1"	2 3/4"	2 1/2"
65	11'-5"	9'-9"	2 3/4"	2 1/2"
70	11'-0"	9'-4"	2 3/4"	2 1/2"
75	10'-7"	9'-1"	2 3/4"	2 1/2"
80	10'-3"	8'-9"	2 3/4"	2 1/2"
85	10'-0"	8'-6"	2 3/4"	2 1/2"
90	9'-8"	8'-3"	2 3/4"	2 1/2"
95	9'-5"	8'-0"	2 3/4"	2 1/2"
100	9'-2"	7'-8"	2 3/4"	2 1/2"
105	9'-0"	7'-4"	2 3/4"	2"
110	8'-9"	7'-0"	2 3/4"	2"
115	8'-7"	6'-8"	2 3/4"	2"
120	8'-5"	6'-5"	2 3/4"	2"
125	8'-3"	6'-2"	2 3/4"	2"
130	8'-1"	5'-11"	2 3/4"	2"
135	7'-10"	5'-8"	2 1/4"	2"
140	7'-6"	5'-6"	2 1/4"	2"
145	7'-3"	5'-4"	2 1/4"	2"
150	7'-0"	5'-1"'	2 1/4"	2"
155	6'-10"	4'-11"	2 1/4"	2"
160	6'-7"	4'-10"	2 1/4"	2"
165	6'-5"	4'-8"	2 1/4"	2"
170	6'-2"	4'-6"	2 1/4"	2"
175	6'-0"	4'-5"	2 1/4"	2"
180	5'-10"	4'-3"	2 1/4"	2"
185	5'-8"	4'-2"	2 1/4"	2"
190	5'-7"	4'-1"	2 1/4"	2"
195	5'-5"	3'-11"	2 1/4"	2"
200	5'-3"	3'-10"	2 1/4"	2"
205	5'-2"	3'-9"	2 1/4"	2"
210	5'-0"	3'-8"	2 1/4"	2"
215	4'-11"	3'-7"	2 1/4"	2"
220	4'-9"	3'-6"	2 1/4"	2"
225	4'-8"	3'-5"	2 1/4"	2"
230	4'-7"	3'-4"	2 1/4"	2"

* FOR SHUTTERS INSTALLED WITHIN THE FIRST 30'-0" ELEVATION OF BUILDING MEASURED AT BOTTOM OF SHUTTER.

** FOR SHUTTERS INSTALLED ABOVE 30'-0" ELEVATION OF BUILDING, MEASURED AT BOTTOM OF SHUTTER.

MAXIMUM DESIGN PRESSURE RATING "W" (p.s.f.) AND CORRESPONDING MAXIMUM ANCHOR SPACING (in.) SCHEDULE. +

(VALID FOR SECTION A ON SHEET 2).

MAXIMUM DESIGN LOAD "W" (p.s.f.)	WALL MOUNTING INSTALLATION AT TOP OR BOTTOM (TO CONCRETE) SHUTTER SPAN			WALL MOUNTING INSTALLATION AT TOP OR BOTTOM (TO MASONRY) SHUTTER SPAN		
	5'-0" OR LESS	5'-0" TO 8'-6"	8'-6" TO MAX. ALLOWED	5'-0" OR LESS	5'-0" TO 8'-6"	8'-6" TO MAX. ALLOWED
FROM 40.0 TO 60.0	9	9	9	9	8	4.5
	9	9	9	9	9	6.5
	9	9	9	9	9	9
FROM >60.0 TO 75.0	9	9	9	9	4	3
	9	9	9	9	5.5	5
	9	9	9	9	8.5	6.5
FROM >75.0 TO 90.0	9	8.5	8.5	9	–	–
	9	8.5	8.5	9	4	4
	9	9	9	9	5.5	5.5
FROM >90.0 TO 120.0	9	7.5	7.5	4.5	–	–
	9	7.5	7.5	6.5	3.5	–
	9	9	9	9	5	–
FROM >120.0 TO 170.0	8	8	–	–	–	–
	8	8	–	3.5	3.5	–
	9	9	–	5	5	–
FROM >170.0 TO 230.0	8	8	–	–	–	–
	8	8	–	3.5	3.5	–
	9	9	–	5	5	–

MAXIMUM DESIGN PRESSURE RATING "W" (p.s.f.) AND CORRESPONDING MAXIMUM ANCHOR SPACING (in.) SCHEDULE. +

(VALID FOR SECTIONS C1 ON SHEET 3).

MAXIMUM DESIGN LOAD "W" (p.s.f.)	WALL MOUNTING INSTALLATION AT TOP OR BOTTOM (TO CONCRETE) SHUTTER SPAN			WALL MOUNTING INSTALLATION AT TOP OR BOTTOM (TO MASONRY) SHUTTER SPAN		
	5'-0" OR LESS	5'-0" TO 8'-6"	8'-6" TO MAX. ALLOWED	5'-0" OR LESS	5'-0" TO 8'-6"	8'-6" TO MAX. ALLOWED
FROM 40.0 TO 60.0	9	9	9	9	9	4.5
	9	9	9	9	9	6.5
	9	9	9	9	9	9
FROM >60.0 TO 75.0	9	9	9	9	6	3.5
	9	9	9	9	8.5	5.5
	9	9	9	9	9	7.5
FROM >75.0 TO 90.0	9	9	9	9	4	3
	9	9	9	9	5.5	4.5
	9	9	9	9	9	6.5
FROM >90.0 TO 120.0	9	7.5	7.5	7	–	–
	9	7.5	7.5	9	3.5	3.5
	9	9	9	9	5	5
FROM >120.0 TO 170.0	9	7	–	3	–	–
	9	7	–	4.5	3	–
	9	9	–	6.5	4.5	–
FROM >170.0 TO 230.0	7	7	–	–	–	–
	7	7	–	3	3	–
	9	9	–	4.5	4.5	–

MAXIMUM DESIGN PRESSURE RATING "W" (p.s.f.) AND CORRESPONDING MAXIMUM ANCHOR SPACING (in.) SCHEDULE. +

(VALID FOR SECTIONS B, B1, B2 ON SHEET 2).

MAXIMUM DESIGN LOAD "W" (p.s.f.)	FLOOR/CEILING MOUNTING INSTALLATION TOP OR BOTTOM (TO CONCRETE) SHUTTER SPAN		
	5'-0" OR LESS	5'-0" TO 8'-6"	8'-6" TO MAX. ALLOWED
FROM 40.0 TO 60.0	9	9	8.5
	9	9	9
	9	9	9
FROM >60.0 TO 75.0	9	9	8
	9	9	8
	9	9	9
FROM >75.0 TO 90.0	9	8	7
	9	8.5	7.5
	9	9	9
FROM >90.0 TO 120.0	9	6	6
	9	6.5	6.5
	9	9	9
FROM >120.0 TO 170.0	7.5	6	–
	7.5	6	–
	9	8.5	–
FROM >170.0 TO 230.0	6	6	–
	6	6	–
	8.5	8.5	–

MAXIMUM DESIGN PRESSURE RATING "W" (p.s.f.) AND CORRESPONDING MAXIMUM ANCHOR SPACING (in.) SCHEDULE. +

(VALID FOR SECTION C ON SHEET 3).

MAXIMUM DESIGN LOAD "W" (p.s.f.)	WALL MOUNTING INSTALLATION AT TOP OR BOTTOM (TO CONCRETE) SHUTTER SPAN			WALL MOUNTING INSTALLATION AT TOP OR BOTTOM (TO MASONRY) SHUTTER SPAN		
	5'-0" OR LESS	5'-0" TO 8'-6"	8'-6" TO MAX. ALLOWED	5'-0" OR LESS	5'-0" TO 8'-6"	8'-6" TO MAX. ALLOWED
FROM 40.0 TO 60.0	9	9	9	9	9	6.5
	9	9	9	9	9	9
	9	9	9	9	9	9
FROM >60.0 TO 75.0	9	9	9	9	7.5	6
	9	9	9	9	9	8.5
	9	9	9	9	9	9
FROM >75.0 TO 90.0	9	9	9	9	6	5.5
	9	9	9	9	9	8
	9	9	9	9	9	9
FROM >90.0 TO 120.0	9	9	9	8	4.5	4.5
	9	9	9	9	7	7
	9	9	9	9	9	9
FROM >120.0 TO 170.0	9	9	–	5	4.5	–
	9	9	–	8	6.5	–
	9	9	–	9	9	–
FROM >170.0 TO 230.0	9	9	–	4.5	4.5	–
	9	9	–	6.5	6.5	–
	9	9	–	9	9	–

\+ MAXIMUM ANCHOR SPACINGS ARE VALID FOR 3 1/2" EDGE DISTANCE. FOR E. D. LESS THAN 3 1/2", REDUCE ANCHOR SPACING BY MULTIPLYING SPACING SHOWN ON SCHEDULE BY THE FOLLOWING FACTORS. (NOTE : Min. E. D. FOR CALK-IN ANCHORS IS 2 1/2"). FOR THIS OPERATION TO BE POSSIBLE, REDUCED SPACING OBTAINED USING FACTOR SHALL NOT BE LESS THAN MINIMUM SPACING INDICATED FOR EACH ANCHOR TYPE AT ANCHORS LEGEND.

ACTUAL E. D.	FACTOR
3"	.86
2 1/2"	.75
2"	.50

ANCHORS LEGEND

ANCHORS TYPE	ANCHOR MIN. SPACING
TAPCON OR MAXI-SET TAPCONS	3.0"
CALK-IN 3000 psi. (MIN.) CONCRETE	2.5"
CRETE-FLEX SS4 3350 psi. (MIN.) CONCRETE	3.0"

TAPCON OR MAXI-SET TAPCONS
CALK-IN
CRETE-FLEX SS4

Approved as complying with the Florida Buiding Code
Date 04/12/2007
NOA# 06-0710.06
Miami Dade Product Control Division
By

F.B.C. (High Velocity Hurricane Zone)

JUN 21 2006

TILTECO INC.
TILLIT TESTING & ENGINEERING COMPANY
8365 N.W. 36th. St., Ste. 305, VIRGINIA GARDENS, FL 33166
Phone : (305)871-1530 . Fax : (305)871-1531
EB-0006719
WALTER A. TILLIT Jr. P. E.
FLORIDA Lic. # 44167

PERFORMANCE SYSTEM 1 ACCORDION SHUTTER

J & E GLASS SOLUTIONS, INC.
(HFMA # 24)
13067 NW 42ND AVENUE
OPA LOCKA, FLORIDA 33054
PH.:(305)769-5553, FAX:(305)769-5553

REV. No	DESCRIPTION	DATE	REV. No	DESCRIPTION	DATE
1	–	–	3	–	–
2	–	–	4	–	–

DRAWN BY: S.M.
DATE: 5/4/06
DRAWING No: 06-117
SHEET 5 OF 6

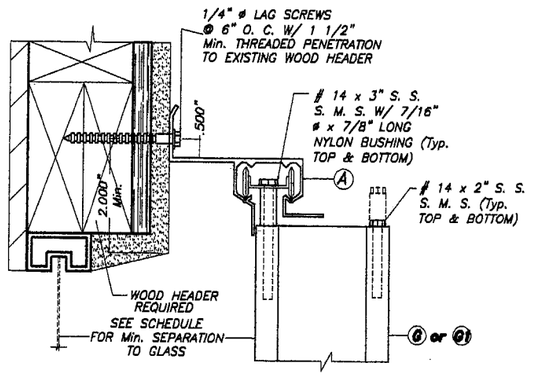

ALTERNATIVE 1

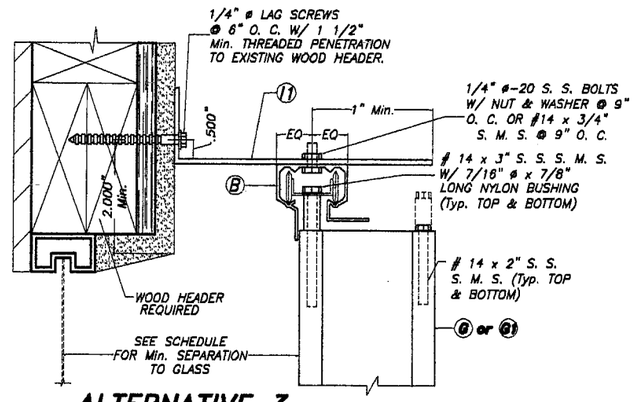

ALTERNATIVE 3

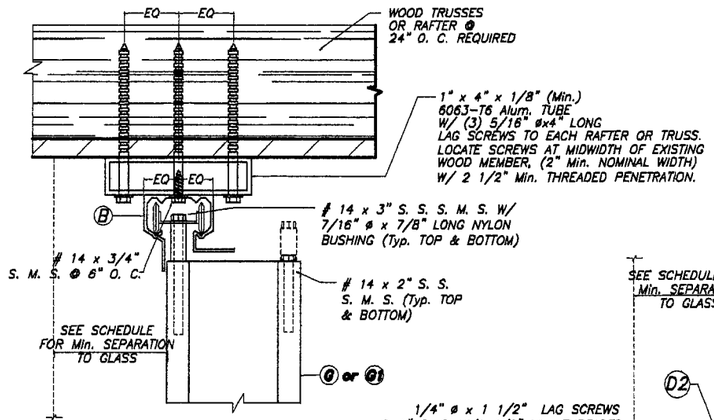

ALTERNATIVE 1

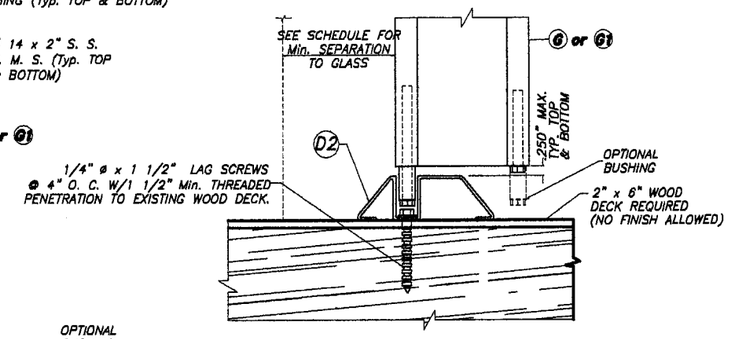

ALTERNATIVE 3

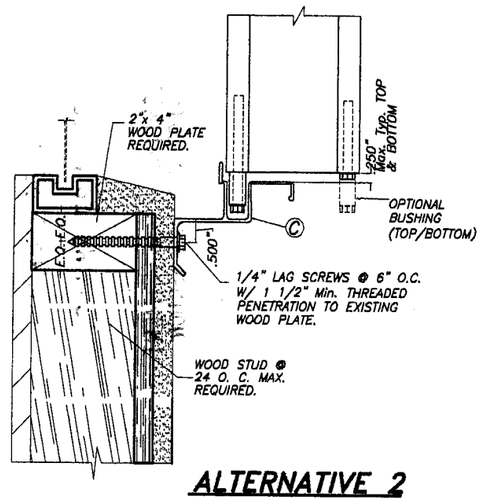

ALTERNATIVE 2

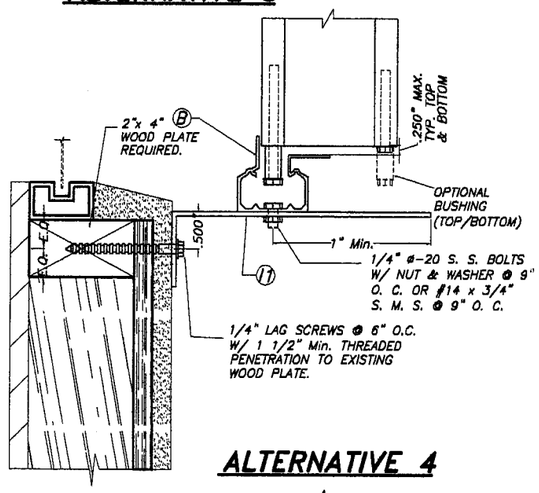

ALTERNATIVE 4

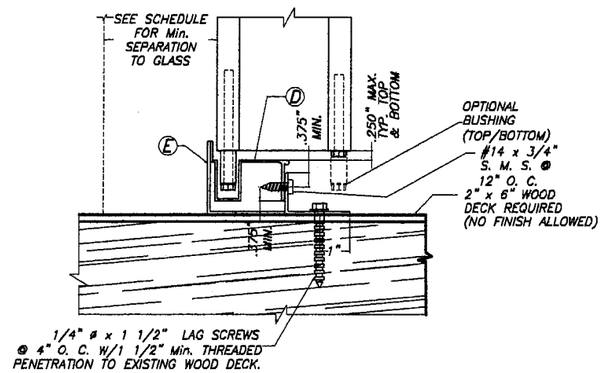

ALTERNATIVE 2

WALL MOUNTING INSTALLATION (OFFSET) SECTIONS B

SCALE: 1/4"=1"

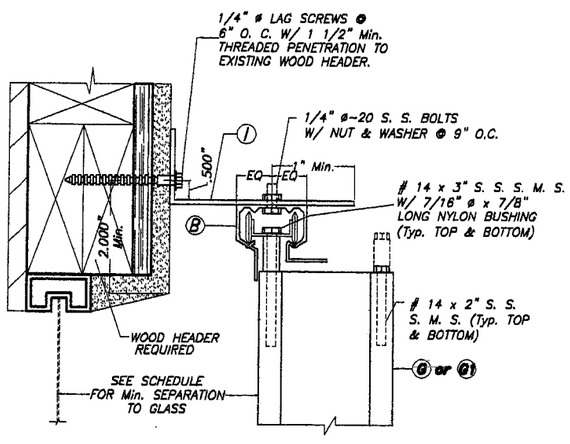

ALTERNATIVE 5

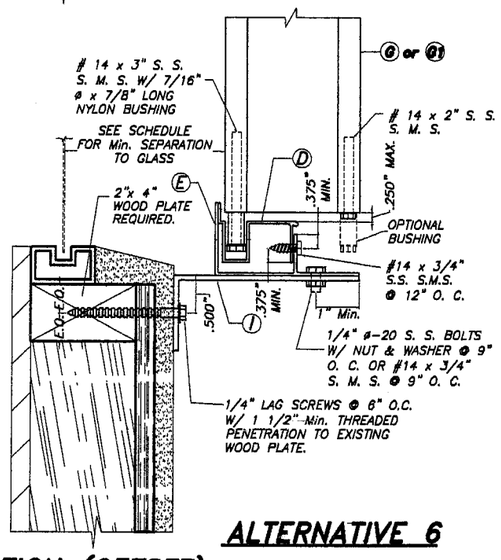

ALTERNATIVE 6

WALL MOUNTING INSTALLATION (OFFSET) SECTIONS A

SCALE: 1/4"=1"

NOTE :
WALL/FLOOR/CEILING MOUNTING SECTIONS CAN BE COMBINED IN ANY WAY TO SUIT ANY INSTALLATION.

NOTES :

1. INSTALLATIONS ARE ONLY VALID FOR INSTALLATIONS WITH DESIGN WIND LOADS LESS THAN OR EQUAL TO 75 p.s.f. AND 9'-0" Max. SHUTTER SPAN.
2. FOR NEW WOOD FRAME CONSTRUCTION: WOOD MEMBERS TO BE SOUTHERN PINE No. 2, W/ SPECIFIC DENSITY OF 0.55 OR EQUAL.

Approved as complying with the Florida Building Code
Date 04/12/2007
NOA# 06-0710.06
Miami Dade Product Control Division
By

F.B.C. (High Velocity Hurricane Zone)

INSTALLATION DETAILS ON EXISTING WOOD BUILDINGS

JUN 21 2006

TILTECO INC.
TILLIT TESTING & ENGINEERING COMPANY
8365 N.W. 36th. St., Ste. 305, VARGINIA GARDENS, Fl. 33166
Phone : (305)871-1530 . Fax : (305)871-1531
EB-0006719
WALTER A. TILLIT Jr. P. E.
FLORIDA Lic. # 44167

PERFORMANCE SYSTEM 1 ACCORDION SHUTTER

J & E GLASS SOLUTIONS, INC.
(HPMA # 24)
13067 NW 42ND AVENUE
OPA LOCKA, FLORIDA 33054
PH.:(305)769-5553, FAX:(305)769-5553

REV. No	DESCRIPTION	DATE	REV. No	DESCRIPTION	DATE
1	–	–	3	–	–
2	–	–	4	–	–

DRAWN BY: S.M.
5/4/06 DATE
06-117 DRAWING No
SHEET 6 OF 6