MIAMI-DADE COUNTY

BUILDING CODE COMPLIANCE OFFICE (BCCO)
PRODUCT CONTROL DIVISION

MIAMI-DADE COUNTY, FLORIDA
METRO-DADE FLAGLER BUILDING
140 WEST FLAGLER STREET, SUITE 1603
MIAMI, FLORIDA 33130-1563
(305) 375-2901 FAX (305) 375-2908
www.miamidade.gov/buldingcode

NOTICE OF ACCEPTANCE (NOA)

Andersen Corporation
100 Fourth Avenue North
Bayport, MN 55003

SCOPE:

This NOA is being issued under the applicable rules and regulations governing the use of construction materials. The documentation submitted has been reviewed by Miami-Dade County Product Control Division and accepted by the Board of Rules and Appeals (BORA) to be used in Miami Dade County and other areas where allowed by the Authority Having Jurisdiction (AHJ).

This NOA shall not be valid after the expiration date stated below. The Miami-Dade County Product Control Division (In Miami Dade County) and/or the AHJ (in areas other than Miami Dade County) reserve the right to have this product or material tested for quality assurance purposes. If this product or material fails to perform in the accepted manner, the manufacturer will incur the expense of such testing and the AHJ may immediately revoke, modify, or suspend the use of such product or material within their jurisdiction. BORA reserves the right to revoke this acceptance, if it is determined by Miami-Dade County Product Control Division that this product or material fails to meet the requirements of the applicable building code.

This product is approved as described herein, and has been designed to comply with the Florida Building Code, including the High Velocity Hurricane Zone.

DESCRIPTION: Series "Vinyl Clad Specialty Direct Set" Fixed Wood Windows –N.I.

APPROVAL DOCUMENT: Drawing No. **W03-116**, titled "Vinyl Clad Direct Set" Fixed Wood Windows (N.I.)", sheets 1 through 18 of 18, dated 12/24/03 with revision C dated 02/27/07, prepared by Al-Farooq Corporation, signed and sealed by Humayoun Farooq, P.E., bearing the Miami-Dade County Product Control Revision stamp with the Notice of Acceptance number and expiration date by the Miami-Dade County Product Control Division.

MISSILE IMPACT RATING: None

LABELING: Each unit shall bear a permanent label with the manufacturer's name or logo, city, state and following statement: "Miami-Dade County Product Control Approved", unless otherwise noted herein.

REVISION of this NOA shall be considered after a revision application has been filed and there has been no change in the applicable building code negatively affecting the performance of this product.

TERMINATION of this NOA will occur after the expiration date or if there has been a revision or change in the materials, use, and/or manufacture of the product or process. Misuse of this NOA as an endorsement of any product, for sales, advertising or any other purposes shall automatically terminate this NOA. Failure to comply with any section of this NOA shall be cause for termination and removal of NOA.

ADVERTISEMENT: The NOA number preceded by the words Miami-Dade County, Florida, and followed by the expiration date may be displayed in advertising literature. If any portion of the NOA is displayed, then it shall be done in its entirety.

INSPECTION: A copy of this entire NOA shall be provided to the user by the manufacturer or its distributors and shall be available for inspection at the job site at the request of the Building Official.

This NOA **revises NOA # 04-0806.01** and consists of this page 1 and evidence page E-1 to E-3, as well as revision document mentioned above.

The submitted documentation was reviewed by **Jaime D. Gascon, P.E.**

PRODUCT CONTROL ACCEPTED

J. Gascon
4/19/07

Andersen Corporation

NOTICE OF ACCEPTANCE: EVIDENCE SUBMITTED

A. DRAWINGS

1. Manufacturer's die drawings and sections.
2. Drawing No. **W03-116**, titled "Vinyl Clad Direct Set" Fixed Wood Windows (N.I.)", sheets 1 through 18 of 18, dated 12/24/03 with revision C dated 02/27/07, prepared by Al-Farooq Corporation, signed and sealed by Humayoun Farooq, P.E.

B. TESTS

1. Test reports on: 1) Air Infiltration Test, per FBC, TAS 202-94
   2) Uniform Static Air Pressure Test, Loading per FBC TAS 202-94
   3) Water Resistance Test, per FBC, TAS 202-94
   4) Forced Entry Test, per FBC 2411 3.2.1, TAS 202-94

   along with marked-up drawings and installation diagram, prepared by Architectural Testing, Inc., Test Report No. **ATI-60046.01-201-18**, dated 11/03/05, signed and sealed by Joseph A. Reed, P.E.
2. Test reports on: 1) Air Infiltration Test, per FBC, TAS 202-94
   2) Uniform Static Air Pressure Test, Loading per FBC TAS 202-94
   3) Water Resistance Test, per FBC, TAS 202-94
   4) Forced Entry Test, per FBC 2411 3.2.1, TAS 202-94

   along with marked-up drawings and installation diagram, prepared by Architectural Testing, Inc., Test Report No. **ATI-63287.01-201-18**, dated 03/29/06, and sealed by Joseph A. Reed, P.E.
3. Test report on: 1) Air Infiltration Test, per PA 202-94.
   2) Uniform Static Air Pressure Test, Loading per PA 202-94.
   3) Water Resistance Test, per PA 202-94.

   along with marked-up drawings and installation diagram of Perma-Shield OVL Series, Vinyl Clad Oval Wood Fixed Windows, prepared by Architectural Testing, Inc., Test Report No. **ATI-02-30227.02**, (**ATI-02-30227.05**, and **ATI-02-30227.06** revisions of original report),, dated originally dated 12/30/97, and revised on 10/09/98, and 12/04/98, signed and sealed by Allen Reeves, P.E.
   (Submitted with File #98-0608.14)
4. Test report on: 1) Air Infiltration Test, per PA 202-94.
   2) Uniform Static Air Pressure Test, Loading per PA 202-94.
   3) Water Resistance Test, per PA 202-94.

   along with marked-up drawings and installation diagram of Perma-Shield ET Series, Vinyl Clad Elliptical Wood Fixed Window, prepared by Architectural Testing, Inc., Test Report No. **ATI-02-30236.02 and ATI-02-30236.05**), dated 12/30/97 and 10/13/98 respectively, signed and sealed by Allen Reeves, P.E.
   (Submitted with File #98-0608.01)

Jaime D. Gascon, P.E.
Chief, Product Control Division
NOA No. 06-0711.07
Expiration Date: November 25, 2009
Approval Date: May 10, 2007

NOTICE OF ACCEPTANCE: EVIDENCE SUBMITTED

5. Test report on: 1) Air Infiltration Test, per PA 202-94,
   2) Uniform Static Air Pressure Test, Loading per PA 202-94 ,
   3) Water Resistance Test, per PA 202-94,
   along with installation diagram of a vinyl clad circle top wood fixed window prepared by Miami Testing Laboratory., Test Report No. **MTL-96-1319**, dated 11/11/96, signed and sealed by David G. Ober, P.E.
6. Test report on: 1) Air Infiltration Test, per FBC, TAS 202-94
   2) Uniform Static Air Pressure Test, Loading per FBC TAS 202-94
   3) Water Resistance Test, per FBC, TAS 202-94
   along with marked-up drawings and installation diagram of Permashield CTN 30-2 Vinyl Clad Circle Top Fixed Wood Window, prepared by Architectural Testing, Inc., Test Reports No. **ATI-15732-N**, dated May 09, 1995, signed and sealed by Allen Reeves, P.E..
   (Submitted with File #95-0531.10) See table below.
7. Test report on: 1) Air Infiltration Test, per FBC, PA 202-94
   2) Uniform Static Air Pressure Test, Loading per FBC PA 202-94
   3) Water Resistance Test, per FBC, PA 202-94
   4) Large Missile Impact Test per FBC, PA 201-94
   5) Cyclic Wind Pressure Loading per FBC, PA 203-94
   6) Forced Entry Test, per FBC 3603.2 (b) and PA 202-94
   along with marked-up drawings and installation diagram of Vinyl Clad Outswing Casement Wood Windows C35 & C335, prepared by Architectural Testing, Inc., Test Report No. **ATI-02-33003.01**, dated 03/12/2001, signed and sealed by Allen Reeves, P.E. ***(Submitted as reference only, to qualify clip installations)***

(Submitted with File #95-0531.10)

TEST	TEST LOADS	DESIGN LOADS
AIR INFILTRATION @ 1.57 PSF SFBC PA 202-94 (0.37 CFM/FT^2)	0.01 CFM//FT^2 ATI-15732-N	---------
UNIFORM STATIC PRESSURE DESIGN LOADS SFBC PA 202-94 POSITIVE 30 Seconds	+75.0 PSF ATI-15732-N	+75.0 PSF ATI-15732-N
UNIFORM STATIC PRESSURE DESIGN LOADS SFBC PA 202-94 NEGATIVE 30 Seconds	----------	---------
WATER RESISTANCE (PSF) SFBC PA 202-94	+21.0 PSF ATI-15732-N	+140.0 PSF ATI-15732-N
UNIFORM STATIC PRESSURE FULL TEST LOAD/WITH MANSORY CLIPS ASTM E330 PA 202-94 POSITIVE 30 Seconds	+97.5 PSF ATI-15732-N	+65.0 PSF ATI-15732-N
UNIFORM STATIC PRESSURE FULL TEST LOAD/WITH MASORY CLIPS SFBC PA 202-94 NEGATIVE 30 Seconds	-97.5 PSF ATI-15732-N	-65.0 PSF ATI-15732-N
UNIFORM STATIC PRESSURE FULL TEST LOAD/WITH #8 x 3" SCREWS ASTM E330 PA 202-94 POSITIVE 30 Seconds	+112.5 PSF ATI-15732-N	+75.0 PSF ATI-15732-N
UNIFORM STATIC PRESSURE FULL TEST LOAD/WITH #8 x 3" SCREWS ASTM E330 PA 202-94 NEGATIVE 30 Seconds	+112.5 PSF ATI-15732-N	+75.0 PSF ATI-15732-N
FORCED-ENTRY RESISTANCE (FER)	NR	NR

Jaime D. Gascon, P.E.
Chief, Product Control Division
NOA No. 06-0711.07
Expiration Date: November 25, 2009
Approval Date: May 10, 2007

NOTICE OF ACCEPTANCE: EVIDENCE SUBMITTED

AAMA 1302.5-76		
TEST	TEST LOADS	DESIGN LOADS
Design Pressure Rating (Positive)/WITH MANSORY CLIPS		**+65.0 PSF**
Design Pressure Rating (Negative)/WITH MANSORY CLIPS		**-65.0 PSF**
Design Pressure Rating (Positive)/WITH 8 x 3" SCREWS		**+75.0 PSF**
Design Pressure Rating (Negative)/WITH 8 x 3" SCREWS		**-75.0 PSF**

C. CALCULATIONS

1. Anchor verification calculations and structural analysis, complying with FBC-2004, prepared by Al-Farooq Corporation, dated June 08, 2006, signed and sealed by Humayoun Farooq, P.E.
   Complies with ASTM E1300-98/ 02

D. QUALITY ASSURANCE

1. Miami Dade Building Code Compliance Office (BCCO).

E. MATERIAL CERTIFICATIONS

1. None.

F. STATEMENTS

1. Statement letter of conformance, dated June 08, 2006, signed and sealed by Humayoun Farooq, P.E.
2. Statement letter of no financial interest, dated June 08, 2006, signed and sealed by Humayoun Farooq, P.E.
3. Statement letter of compliance, prepared by Architectural Testing, Inc., dated October 16, 2005, signed and sealed by Joseph A. Reed, P.E.

G. OTHER

None

Jaime D. Gascon, P.E.
Chief, Product Control Division
NOA No. 06-0711.07
Expiration Date: November 25, 2009
Approval Date: May 10, 2007

DESIGN LOAD CAPACITY – PSF													
WINDOW DESCRIPTION	UNIT WIDTH INCHES	UNIT HT. INCHES	GLASS TYPE 'A'				GLASS TYPE 'B'				ANCHOR SPACING		
			E1300–98		E1300–02		E1300–98		E1300–02				
			EXT.(+)	INT.(–)	EXT.(+)	INT.(–)	EXT.(+)	INT.(–)	EXT.(+)	INT.(–)	FIN ANCHORS	FRAME ANCHORS	CLIP ANCHORS
CTC1	24–1/8	14–3/8	75.0	75.0	75.0	75.0	75.0	75.0	75.0	75.0	4" O.C.	7" O.C.	18" O.C.
CTCW1	28–3/8	16–1/2	75.0	75.0	75.0	75.0	75.0	75.0	75.0	75.0	4" O.C.	7" O.C.	18" O.C.
CTCX1	31–1/2	18	75.0	75.0	75.0	75.0	75.0	75.0	75.0	75.0	4" O.C.	7" O.C.	18" O.C.
CTCXW1	35–15/16	20–1/4	75.0	75.0	75.0	75.0	75.0	75.0	75.0	75.0	4" O.C.	7" O.C.	18" O.C.
CTC2	48	26–5/16	74.7	74.7	75.0	75.0	75.0	75.0	75.0	75.0	4" O.C.	7" O.C.	18" O.C.
CTCW2	56–1/2	30–9/16	57.2	57.2	75.0	75.0	75.0	75.0	75.0	75.0	4" O.C.	7" O.C.	18" O.C.
CTCX2	62–3/4	33–5/8	49.1	49.1	66.3	66.3	75.0	75.0	75.0	75.0	4" O.C.	7" O.C.	18" O.C.
CTC3	71–7/8	38–1/4	40.6	40.6	54.4	54.4	75.0	75.0	75.0	75.0	4" O.C.	7" O.C.	18" O.C.

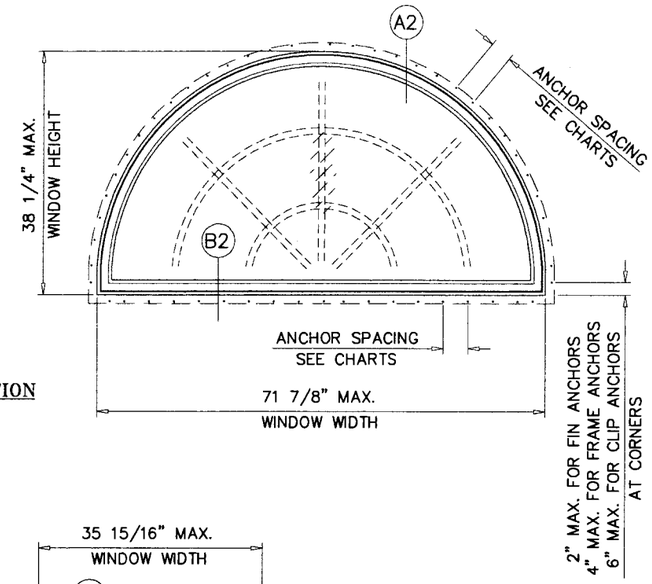

TYPICAL ELEVATION
TESTED UNIT

DESIGN LOAD CAPACITY – PSF													
WINDOW DESCRIPTION	UNIT WIDTH INCHES	UNIT HT. INCHES	GLASS TYPE 'A'				GLASS TYPE 'B'				ANCHOR SPACING		
			E1300–98		E1300–02		E1300–98		E1300–02				
			EXT.(+)	INT.(–)	EXT.(+)	INT.(–)	EXT.(+)	INT.(–)	EXT.(+)	INT.(–)	FIN ANCHORS	FRAME ANCHORS	CLIP ANCHORS
CIR20	24–1/8	24–1/8	75.0	75.0	75.0	75.0	105.0	105.0	105.0	105.0	4" O.C.	11" O.C.	18" O.C.
CIR24	28–3/8	28–3/8	75.0	75.0	75.0	75.0	105.0	105.0	105.0	105.0	4" O.C.	11" O.C.	18" O.C.
CIR30	35–15/16	35–15/16	75.0	75.0	75.0	75.0	105.0	105.0	105.0	105.0	4" O.C.	11" O.C.	18" O.C.

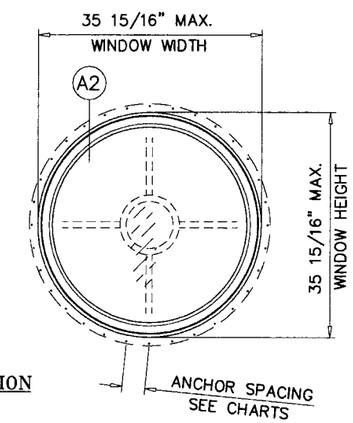

TYPICAL ELEVATION
TESTED UNIT

WINDOW DESCRIPTION
CTC1
CTCW1
CTCX1
CTCXW1
CTC2
CTCW2
CTCX2
CTC3
CIR20
CIR24
CIR30

VINYL CLAD SPECIALTY DIRECT SET WOOD WINDOWS

THESE PRODUCTS CAN BE INSTALLED AS SINGLE UNITS OR SIDE BY SIDE COMBINATIONS OF TWO OR MORE UNITS, ALSO IN COMBINATION WITH MIAMI–DADE COUNTY APPROVED PRODUCTS USING APPROVED MULLIONS IN BETWEEN.

DESIGN LOAD RATING FOR WINDOWS TO BE AS PER CHARTS SHOWN.

THIS PRODUCT HAS BEEN DESIGNED AND TESTED TO COMPLY WITH THE REQUIREMENTS OF THE FLORIDA BUILDING CODE 2004 EDITION INCLUDING HIGH VELOCITY HURRICANE ZONE (HVHZ).

WOOD BUCKS BY OTHERS, MUST BE ANCHORED PROPERLY TO TRANSFER LOADS TO THE STRUCTURE.

ANCHORS SHALL BE AS LISTED, SPACED AS SHOWN ON DETAILS, ANCHORS EMBEDMENT TO BASE MATERIAL SHALL BE BEYOND WALL DRESSING OR STUCCO.

ANCHORING OR LOADING CONDITIONS NOT SHOWN IN THESE DETAILS ARE NOT PART OF THIS APPROVAL.

A LOAD DURATION INCREASE IN ALLOWABLE STRESS IS USED IN DESIGN OF ANCHORS INTO WOOD ONLY.

WINDOWS NOT RATED FOR IMPACT.

INSTALLATION OF THIS PRODUCT IN THE HVHZ AREA REQUIRES THE USE OF APPROVED SHUTTERS OR EXTERNAL PROTECTION DEVICES COMPLYING WITH HVHZ REQUIREMENTS.

INSTALLATION OF THIS SYSTEM OUTSIDE THE HVHZ AREA SHALL MEET THE APPLICABLE REQUIREMENTS FOR WIND BORNE DEBRIS PROTECTION.

NOTE:
GLASS CAPACITIES ON THIS SHEET ARE BASED ON
A: ASTM E1300–98 (60 SEC. WIND)
B: ASTM E1300–02 (3 SEC. GUSTS)

Engr: DR. HUMAYOUN FAROOQ
STRUCTURES
FLA. PE # 16557
C.A.N. 3538

PRODUCT REVISED
as complying with the Florida Buiding Code
Acceptance No 06-0711.07
Expiration Date 11/25/2009
By
Miami-Dade Product Control Division

AL-FAROOQ CORPORATION
ENGINEERS & PRODUCT DEVELOPMENT
1235 S.W. 87 AVE
MIAMI, FLORIDA 33174
TEL. (305) 264-8100 FAX. (305) 262-6978
COMP-ANL\W03-116AC

VINYL CLAD DIRECT SET FIXED WOOD WINDOWS

ANDERSEN CORPORATION
100 FOURTH AVE. NORTH
BAYPORT, MN. 55003-1096
TEL (800) 426-7691 FAX (–)

revisions:

no	date	by	description
A	09.09.04		REV. PER BCCO COMMENTS
B	05.09.06		UPDTED FOR 2004 FBC
C	02.27.07		NO CHANGE THIS SHEET

date: 12-24-03
scale: 1/2"=1'-0"
dr. by: HAMID
chk. by:

drawing no.
W03-116

DESIGN LOAD CAPACITY – PSF													
WINDOW DESCRIPTION	UNIT WIDTH INCHES	UNIT HT. INCHES	GLASS TYPE 'A'				GLASS TYPE 'B'				ANCHOR SPACING		
			E1300–98		E1300–02		E1300–98		E1300–02				
			EXT.(+)	INT.(–)	EXT.(+)	INT.(–)	EXT.(+)	INT.(–)	EXT.(+)	INT.(–)	FIN ANCHORS	FRAME ANCHORS	CLIP ANCHORS
CTQC1	24–1/8	24–1/8	75.0	75.0	75.0	75.0	75.0	75.0	75.0	75.0	4" O.C.	9" O.C.	18" O.C.
CTQCW1	28–3/8	28–3/8	75.0	75.0	75.0	75.0	75.0	75.0	75.0	75.0	4" O.C.	9" O.C.	18" O.C.
CTQCX1	31–1/2	31–1/2	75.0	75.0	75.0	75.0	75.0	75.0	75.0	75.0	4" O.C.	9" O.C.	18" O.C.
CTQA3	35–15/16	35–15/16	75.0	75.0	75.0	75.0	75.0	75.0	75.0	75.0	4" O.C.	9" O.C.	18" O.C.

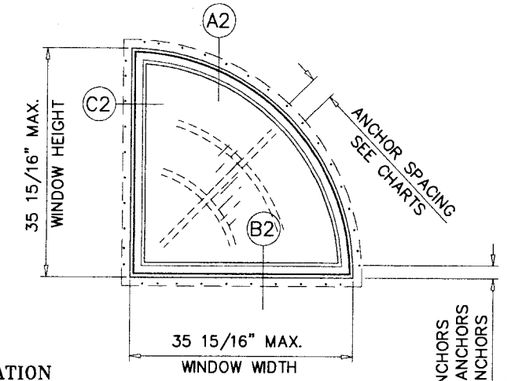

TYPICAL ELEVATION
TESTED UNIT

DESIGN LOAD CAPACITY – PSF													
WINDOW DESCRIPTION	UNIT WIDTH INCHES	UNIT HT. INCHES	GLASS TYPE 'A'				GLASS TYPE 'B'				ANCHOR SPACING		
			E1300–98		E1300–02		E1300–98		E1300–02				
			EXT.(+)	INT.(–)	EXT.(+)	INT.(–)	EXT.(+)	INT.(–)	EXT.(+)	INT.(–)	FIN ANCHORS	FRAME ANCHORS	CLIP ANCHORS
OVL1824	19–3/4	28–3/8	75.0	75.0	75.0	75.0	105.0	105.0	105.0	105.0	3" O.C.	11" O.C.	18" O.C.
OVL2030	24	35–15/16	75.0	75.0	75.0	75.0	105.0	105.0	105.0	105.0	3" O.C.	11" O.C.	18" O.C.
OVL3048	36	56–1/2	56.1	56.1	74.9	74.9	105.0	105.0	105.0	105.0	3" O.C.	11" O.C.	18" O.C.

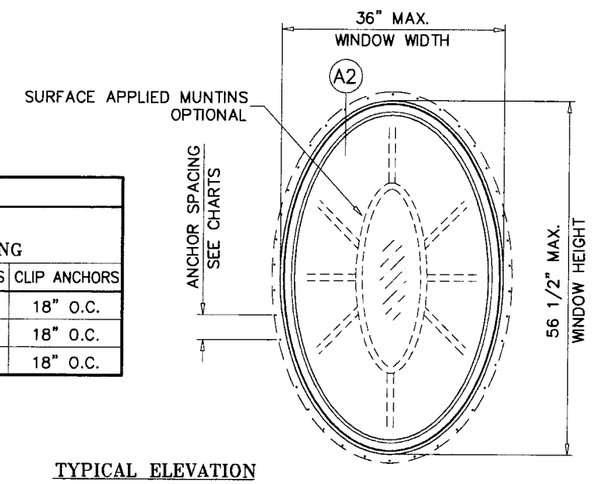

TYPICAL ELEVATION
TESTED UNIT

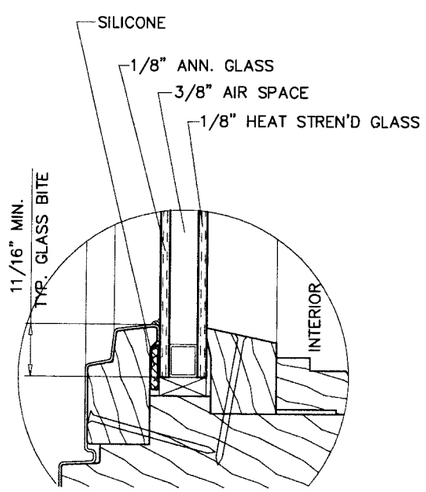

GLASS TYPE 'A'
5/8" OVERALL INSULATING GLASS

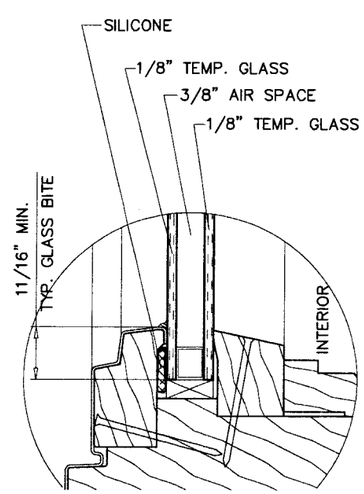

GLASS TYPE 'B'
5/8" OVERALL INSULATING GLASS

GLAZING OPTIONS

WINDOW DESCRIPTION
CTQC1
CTQCW1
CTQCX1
CTQA3
OVL1824
OVL2030
OVL3048

NOTE:
GLASS CAPACITIES ON THIS SHEET ARE BASED ON
A: ASTM E1300–98 (60 SEC. WIND)
B: ASTM E1300–02 (3 SEC. GUSTS)

Engr: DR. HUMAYOUN FAROOQ
STRUCTURES
FLA. PE # 16557
C.A.N. 3538

FEB 28 2007

PRODUCT REVISED
as complying with the Florida Buiding Code
Acceptance No. 06-0711.07
Expiration Date 11/25/2009
By
Miami Dade Product Control Division

AL-FAROOQ CORPORATION
ENGINEERS & PRODUCT DEVELOPMENT
1235 S.W. 87 AVE
MIAMI, FLORIDA 33174
TEL. (305) 264-8100 FAX. (305) 262-6978
COMP–ANL\W03–116AC

VINYL CLAD DIRECT SET FIXED WOOD WINDOWS

ANDERSEN CORPORATION
100 FOURTH AVE. NORTH
BAYPORT, MN. 55003–1096
TEL. (800) 426-7691 FAX (–)

revisions:

no	date	by	description
A	09.09.04		REV. PER BCCO COMMENTS
B	05.09.06		UPDTED FOR 2004 FBC
C	02.27.07		GLASS THK. REV.

date: 12–24–03
scale: 1/2"=1'–0"
dr. by: HAMID
chk. by:

drawing no.
W03–116

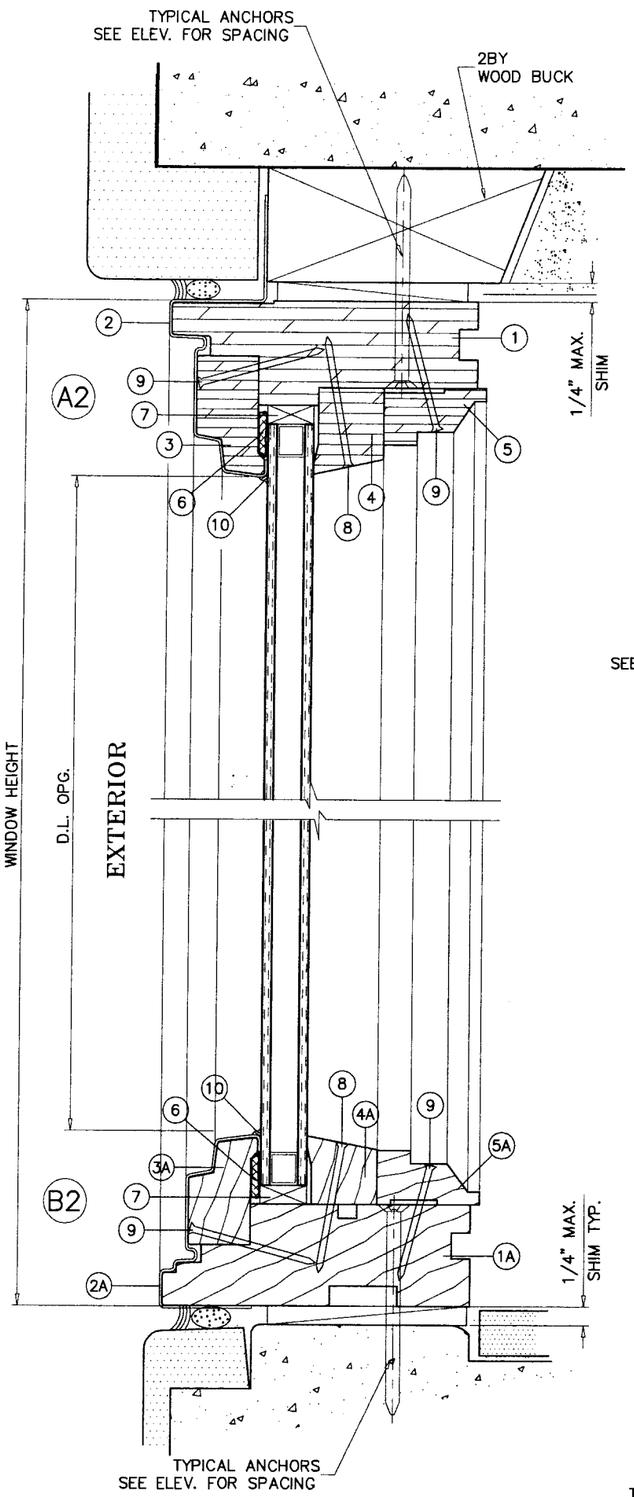

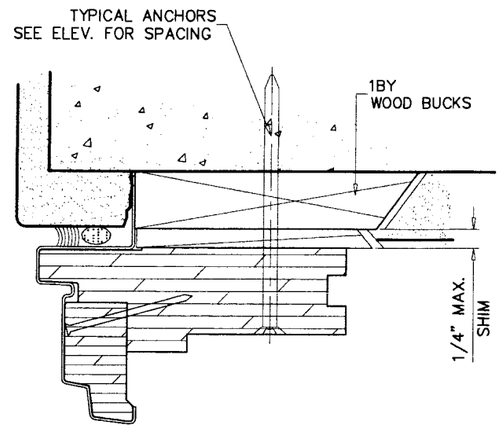

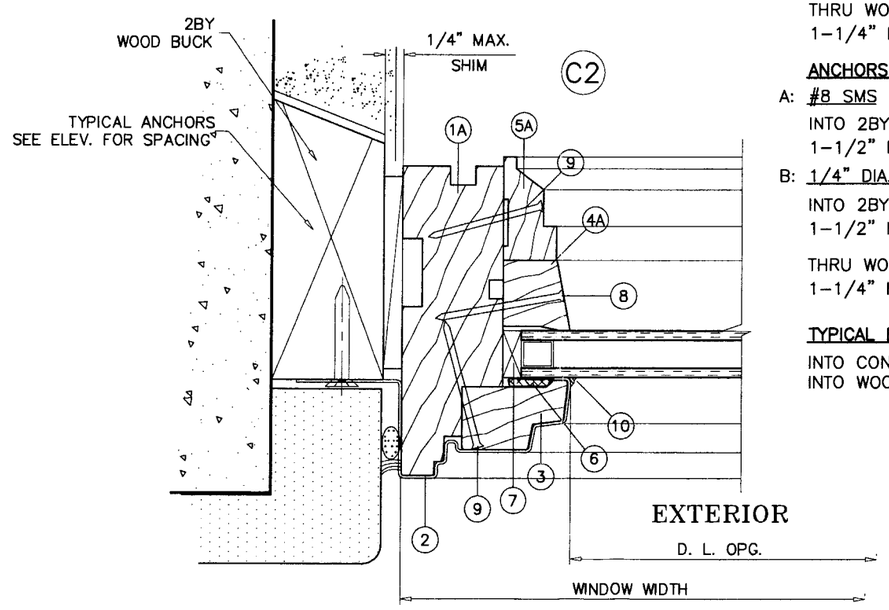

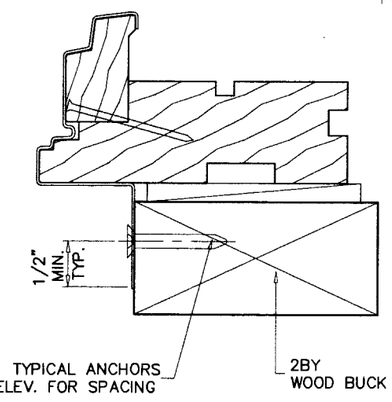

WOOD BUCKS NOT BY ANDERSEN, MUST SUSTAIN LOADS IMPOSED BY GLAZING SYSTEM AND TRANSFER THEM TO THE BUILDING STRUCTURE.

TYPICAL ANCHORS

ANCHORS THRU INSTALLATION FLANGE

ROOFING NAILS, 11GA. X 1-3/4" LONG
INTO 2BY WOOD BUCKS OR WOOD STRUCTURE

#8 SMS
INTO 2BY WOOD BUCKS OR WOOD STRUCTURE
1-1/2" MIN. PENETRATION INTO WOOD

ANCHORS THRU WINDOW FRAME

#12 SMS
INTO 2BY WOOD BUCKS OR WOOD STRUCTURE
1-1/2" MIN. PENETRATION INTO WOOD

1/4" DIA. TAPCONS
INTO 2BY WOOD BUCKS OR WOOD STRUCTURE
1-1/2" MIN. PENETRATION INTO WOOD

THRU WOOD BUCKS INTO MASONRY OR DIRECTLY INTO MASONRY
1-1/4" MIN. EMBED INTO CONC. OR MASONRY

ANCHORS THRU INSTALLATION CLIPS

A: #8 SMS
INTO 2BY WOOD BUCKS OR WOOD STRUCTURE
1-1/2" MIN. PENETRATION INTO WOOD

B: 1/4" DIA. TAPCONS
INTO 2BY WOOD BUCKS OR WOOD STRUCTURE
1-1/2" MIN. PENETRATION INTO WOOD

THRU WOOD BUCKS INTO MASONRY OR DIRECTLY INTO MASONRY
1-1/4" MIN. EMBED INTO CONC. OR MASONRY

TYPICAL EDGE DISTANCE

INTO CONCRETE AND MASONRY = 1-1/2" MIN.
INTO WOOD STRUCTURE = 3/4" MIN.

WINDOW DESCRIPTION
CTC1
CTCW1
CTCX1
CTCXW1
CTC2
CTCW2
CTCX2
CTC3
CTQC1
CTQCW1
CTQCX1
CTQA3
CIR20
CIR24
CIR30
OVL1824
OVL2030
OVL3048

Engr: DR. HUMAYOUN FAROOQ
STRUCTURES
FLA. PE # 16557
C.A.N. 3538

PRODUCT REVISED
as complying with the Florida Buiding Code
Acceptance No 06-0711-07
Expiration Date 11/25/2009
By
Miami Dade Product Control Division

AL-FAROOQ CORPORATION
ENGINEERS & PRODUCT DEVELOPMENT
1235 S.W. 87 AVE
MIAMI, FLORIDA 33174
TEL. (305) 264-8100 FAX. (305) 262-6978
COMP-ANL\W03-116AC

VINYL CLAD DIRECT SET FIXED WOOD WINDOWS

ANDERSEN CORPORATION
100 FOURTH AVE. NORTH
BAYPORT, MN. 55003-1096
TEL. (800) 426-7691 FAX (-)

revisions:

no	date	by	description
A	09.09.04		REV. PER BCCO COMMENTS
B	05.09.06		UPDTED FOR 2004 FBC
C	02.27.07		NO CHANGE THIS SHEET

date: 12-24-03
scale: 1/2" = 1"
dr. by: HAMID
chk. by:

drawing no.
W03-116

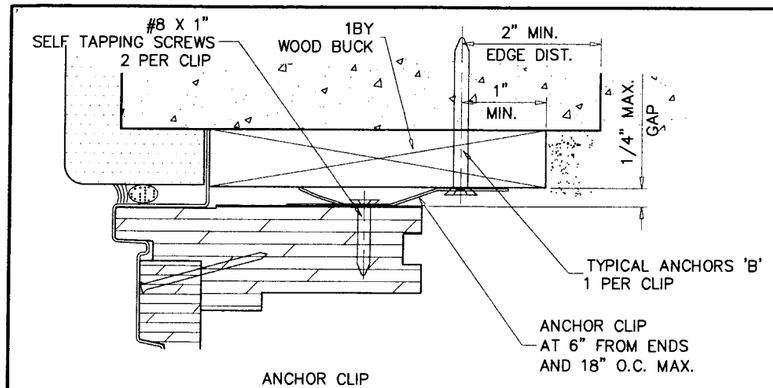

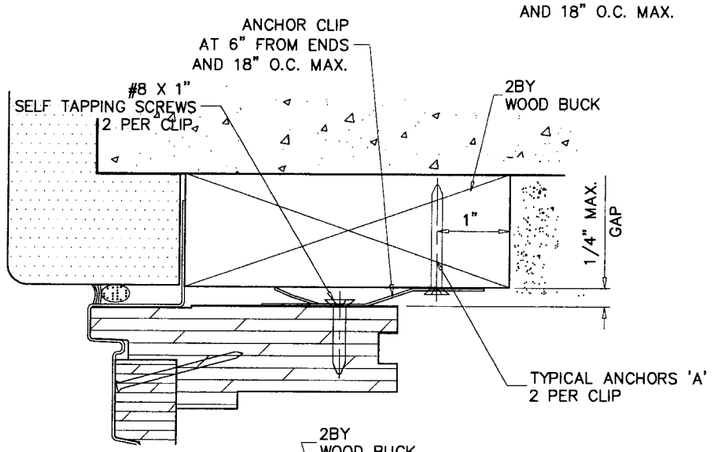

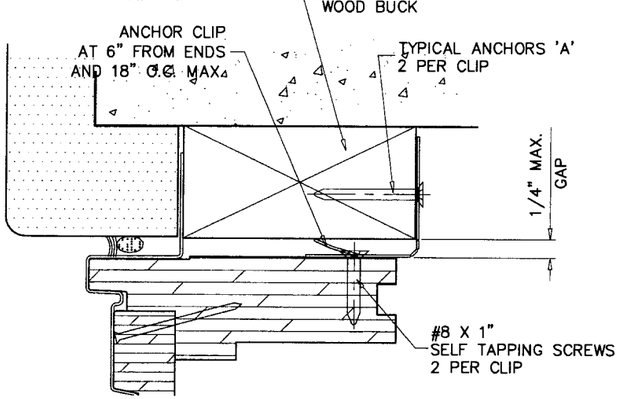

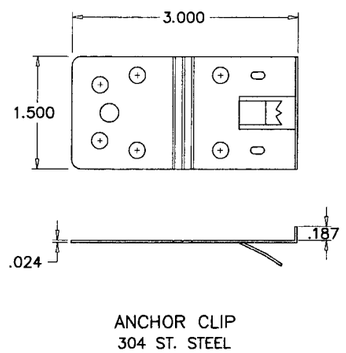

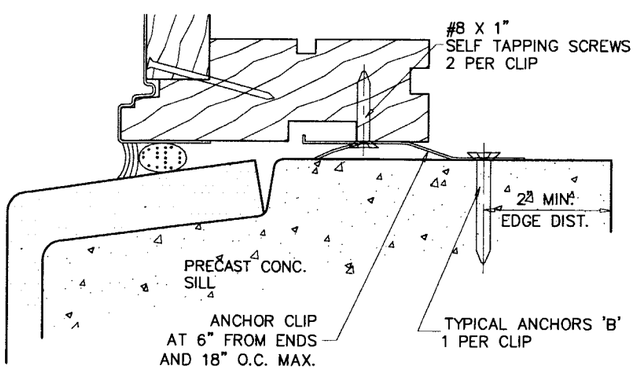

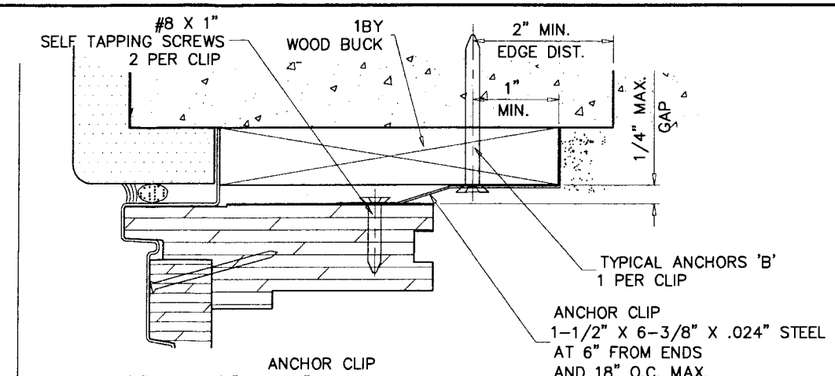

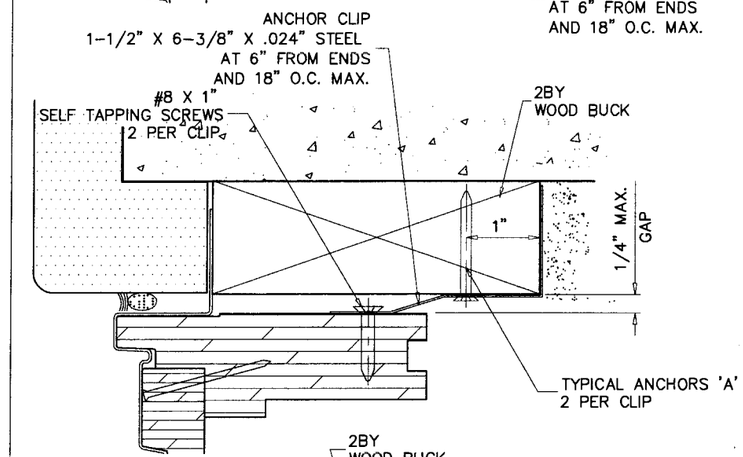

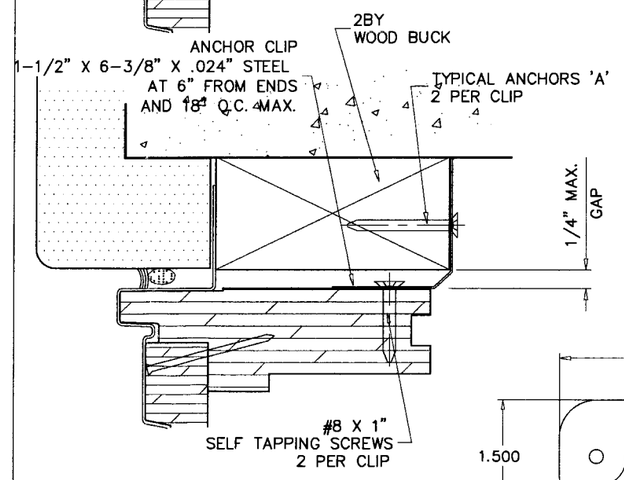

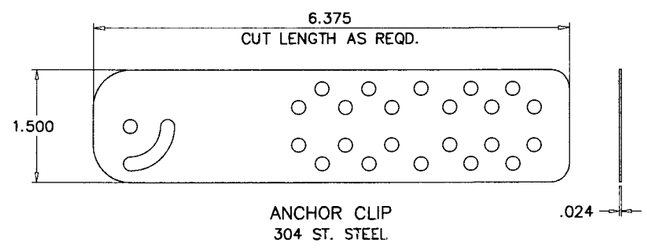

WINDOW DESCRIPTION
CTC1
CTCW1
CTCX1
CTCXW1
CTC2
CTCW2
CTCX2
CTC3
CTQC1
CTQCW1
CTQCX1
CTQA3
CIR20
CIR24
CIR30
OVL1824
OVL2030
OVL3048

Engr: DR. HUMAYOUN FAROOQ
STRUCTURES
FLA. PE # 16557
C.A.N. 3538

FEB 28 2007

PRODUCT REVISED
as complying with the Florida
Buiding Code
Acceptance No. 06-0711.07
Expiration Date 11/25/2009
By
Miami Dade Product Control
Division

CLIP INSTALLATION DETAILS

AL-FAROOQ CORPORATION
ENGINEERS & PRODUCT DEVELOPMENT
1235 S.W. 87 AVE
MIAMI, FLORIDA 33174
TEL. (305) 264-8100 FAX. (305) 262-6978
COMP-ANL\W03-116AC

VINYL CLAD DIRECT SET FIXED WOOD WINDOWS

ANDERSEN CORPORATION
100 FOURTH AVE. NORTH
BAYPORT, MN. 55003-1096
TEL. (800) 426-7691 FAX (-)

revisions:

no	date	by	description
A	09.09.04		REV. PER BCCO COMMENTS
B	05.09.06		UPDTED FOR 2004 FBC
C	02.27.07		NO CHANGE THIS SHEET

date: 12-24-03
scale: 1/2" = 1"
dr. by: HAMID
chk. by:

drawing no.
W03-116

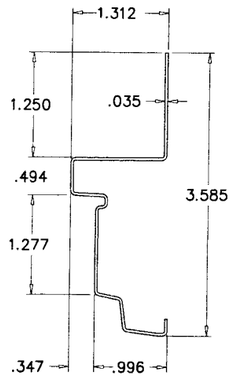

VINYL CLADDING
(ARCH)

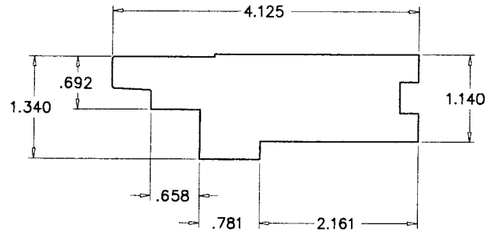

FRAME HEAD/JAMB
(ARCH)

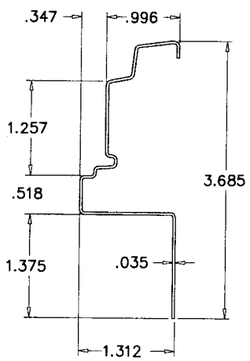

VINYL CLADDING
JAMB/SILL

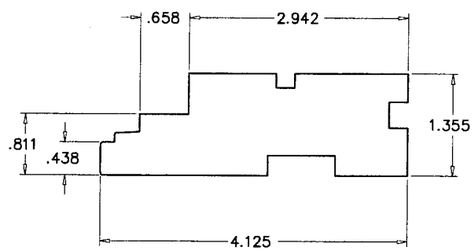

FRAME JAMB/SILL

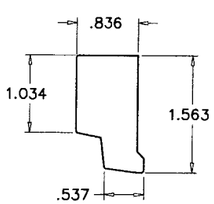

EXTERIOR GLASS STOP
(ARCH)

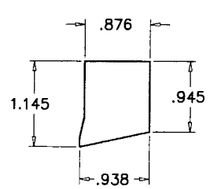

INTERIOR GLASS STOP
(ARCH)

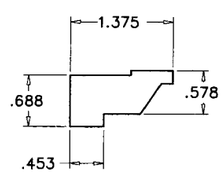

INTERIOR STOP
(ARCH)

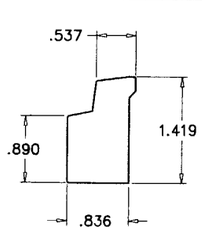

EXTERIOR GLASS STOP
(JAMB/SILL)

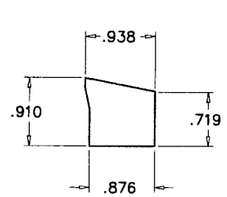

INTERIOR GLASS STOP
(JAMB/SILL)

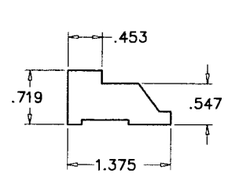

INTERIOR STOP
(JAMB/SILL)

ITEM #	PART NO.	REQD.	DESCRIPTION	MATERIAL	MANF./SUPPLIER/REMARKS
1	27229	AS REQD.	FRAME HEAD/JAMB (ARCH)	WOOD	ANDERSEN
1A	27230	AS REQD.	FRAME JAMB/SILL	WOOD	ANDERSEN
2	27231	AS REQD.	FRAME COVER (ARCH)	VINYL	–
2A	–	AS REQD.	FRAME COVER (JAMB/SILL)	VINYL	–
3	27215	AS REQD.	EXTERIOR GLASS STOP (ARCH)	WOOD	ANDERSEN
3A	27214	AS REQD.	EXTERIOR GLASS STOP (JAMB/SILL)	WOOD	ANDERSEN
4	27228	AS REQD.	INTERIOR GLASS STOP (ARCH)	WOOD	ANDERSEN
4A	27227	AS REQD.	INTERIOR GLASS STOP (JAMB/SILL)	WOOD	ANDERSEN
5	27207	AS REQD.	INTERIOR STOP (ARCH)	WOOD	ANDERSEN
5A	27208	AS REQD.	INTERIOR STOP (JAMB/SILL)	WOOD	ANDERSEN
6	–	AS REQD.	GLAZING COMPOUND	SILICONE	DOW OR GE
7	20065	AS REQD.	SETTING BLOCK SPACER	–	–
8	27255	–	GALVANIZED NAILS AT 7" O.C.	–	16 GA. X 1–3/4"
9	27255	–	GALVANIZED NAILS AT 7" O.C.	–	16 GA. X 1–1/2"
10	–	AS REQD.	FILLET BEAD	SILICONE	DOW

NON CURVED PROFILES COMPOSED OF YELLOW PINE, PONDEROSA PINE OR EQUAL.
CURVED PROFILES COMPOSED OF LAMINATED YELLOW POPLAR, MAPLE OR SELECT HARD WOODS.

WINDOW DESCRIPTION
CTC1
CTCW1
CTCX1
CTCXW1
CTC2
CTCW2
CTCX2
CTC3
CTQC1
CTQCW1
CTQCX1
CTQA3
CIR20
CIR24
CIR30
OVL1824
OVL2030
OVL3048

Engr: DR. HUMAYOUN FAROOQ
STRUCTURES
FLA. PE # 16557
C.A.N. 3538

FEB 26 2007

PRODUCT REVISED
as complying with the Florida Building Code
Acceptance No 06-0711.07
Expiration Date 11/25/2009
By
Miami Dade Product Control Division

AL-FAROOQ CORPORATION
ENGINEERS & PRODUCT DEVELOPMENT
1235 S.W. 87 AVE
MIAMI, FLORIDA 33174
TEL. (305) 264-8100 FAX. (305) 262-6978

COMP–ANL\W03–116AC

VINYL CLAD DIRECT SET FIXED WOOD WINDOWS

ANDERSEN CORPORATION
100 FOURTH AVE. NORTH
BAYPORT, MN. 55003–1096
TEL. (800) 426–7691 FAX (–)

revisions:

no	date	by	description
A	09.09.04		REV. PER BCCO COMMENTS
B	05.09.06		UPDTED FOR 2004 FBC
C	02.27.07		NO CHANGE THIS SHEET

date: 12–24–03
scale: 1/2" = 1"
dr. by: HAMID
chk. by:

drawing no.
W03–116

DESIGN LOAD CAPACITY – PSF													
WINDOW DESCRIPTION	UNIT WIDTH INCHES	UNIT HT. INCHES	GLASS TYPE 'A'				GLASS TYPE 'B'				ANCHOR SPACING		
			E1300-98		E1300-02		E1300-98		E1300-02				
			EXT.(+)	INT.(–)	EXT.(+)	INT.(–)	EXT.(+)	INT.(–)	EXT.(+)	INT.(–)	FIN ANCHORS	FRAME ANCHORS	CLIP ANCHORS
CTN20	25-5/8	15-3/16	75.0	75.0	75.0	75.0	75.0	75.0	75.0	75.0	3" O.C.	4" O.C.	10" O.C.
CTN24	29-5/8	17-3/16	75.0	75.0	75.0	75.0	75.0	75.0	75.0	75.0	3" O.C.	4" O.C.	10" O.C.
CTN28	33-5/8	19-3/16	75.0	75.0	75.0	75.0	75.0	75.0	75.0	75.0	3" O.C.	4" O.C.	10" O.C.
CTN30	37-5/8	21-3/16	75.0	75.0	75.0	75.0	75.0	75.0	75.0	75.0	3" O.C.	4" O.C.	10" O.C.
CTN34	41-5/8	23-3/16	75.0	75.0	75.0	75.0	75.0	75.0	75.0	75.0	3" O.C.	4" O.C.	10" O.C.
CTN28-2	67-5/16	36	43.6	43.6	58.4	58.4	75.0	75.0	75.0	75.0	3" O.C.	4" O.C.	10" O.C.
CTN30-2	75-5/16	40	–	–	–	–	75.0	75.0	75.0	75.0	3" O.C.	4" O.C.	10" O.C.

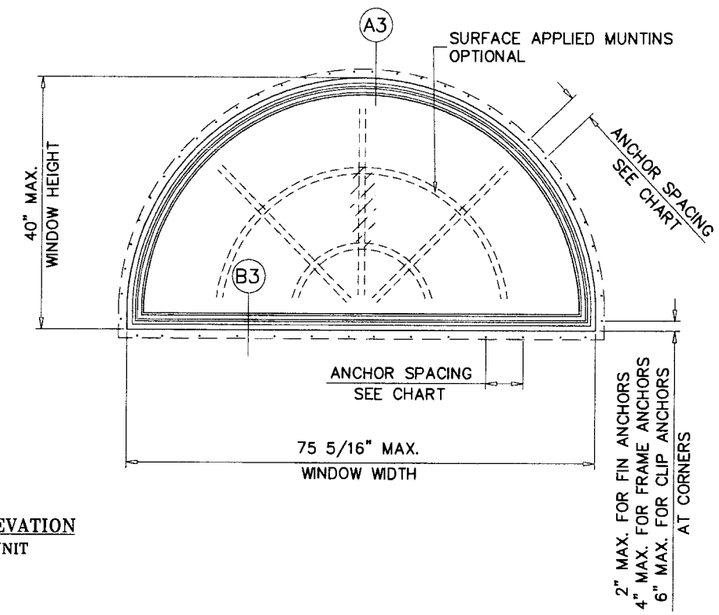

TYPICAL ELEVATION
TESTED UNIT

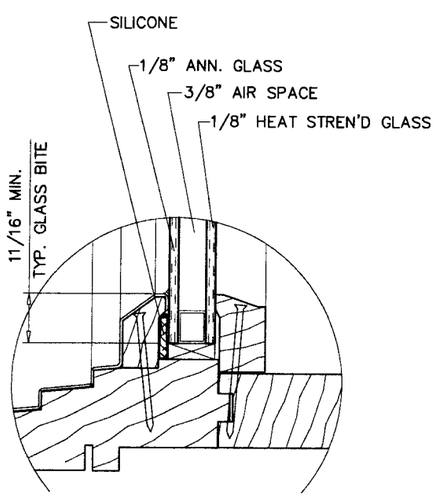

GLASS TYPE 'A'
5/8" OVERALL INSULATING GLASS

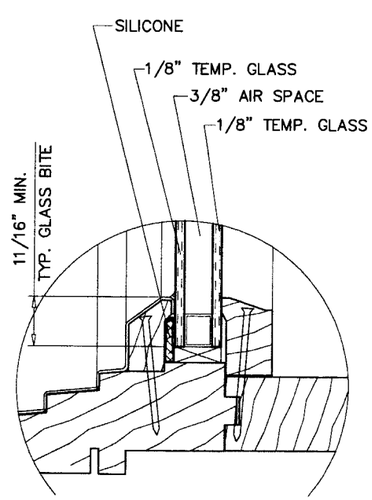

GLASS TYPE 'B'
5/8" OVERALL INSULATING GLASS

GLAZING OPTIONS

WINDOW DESCRIPTION
CTN20
CTN24
CTN28
CTN30
CTN34
CTN28-2
CTN30-2

NOTE:
GLASS CAPACITIES ON THIS SHEET ARE BASED ON
A: ASTM E1300-98 (60 SEC. WIND)
B: ASTM E1300-02 (3 SEC. GUSTS)

Engr: DR. HUMAYOUN FAROOQ
STRUCTURES
FLA. PE # 16557
C.A.N. 3538

FEB 7 07

PRODUCT REVISED
as complying with the Florida Buiding Code
Acceptance No 06-0711.07
Expiration Date 11/25/2009
By
Miami Dade Product Control Division

AL-FAROOQ CORPORATION
ENGINEERS & PRODUCT DEVELOPMENT
1235 S.W. 87 AVE
MIAMI, FLORIDA 33174
TEL. (305) 264-8100 FAX. (305) 262-6978
COMP-ANL\W03-116AC

VINYL CLAD DIRECT SET FIXED WOOD WINDOWS

ANDERSEN CORPORATION
100 FOURTH AVE. NORTH
BAYPORT, MN. 55003-1096
TEL. (800) 426-7691 FAX (-)

revisions:

no	date	by	description
A	09.09.04		REV. PER BCCO COMMENTS
B	05.09.06		UPDTED FOR 2004 FBC
C	02.27.07		GLASS THK. REV.

date: 12-24-03
scale: 1/2"=1'-0"
dr. by: HAMID
chk. by:

drawing no.
W03-116

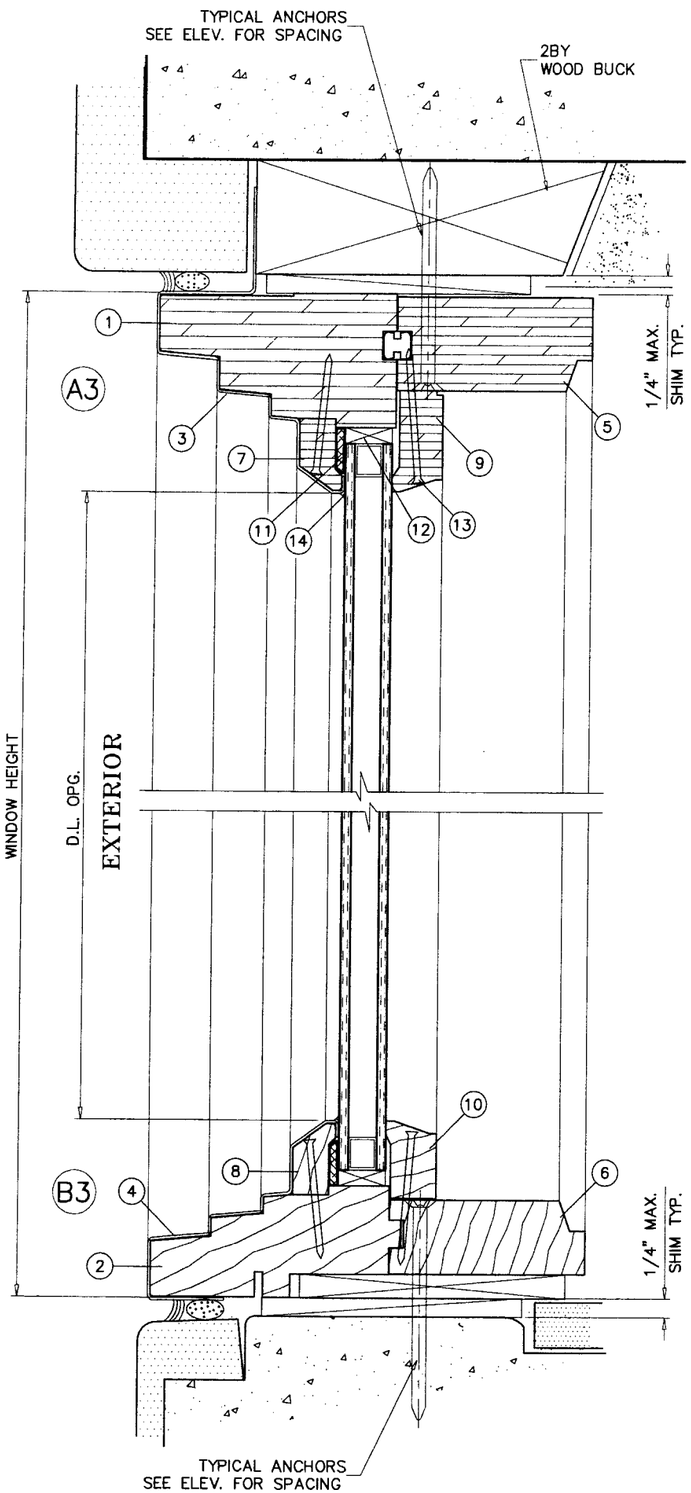

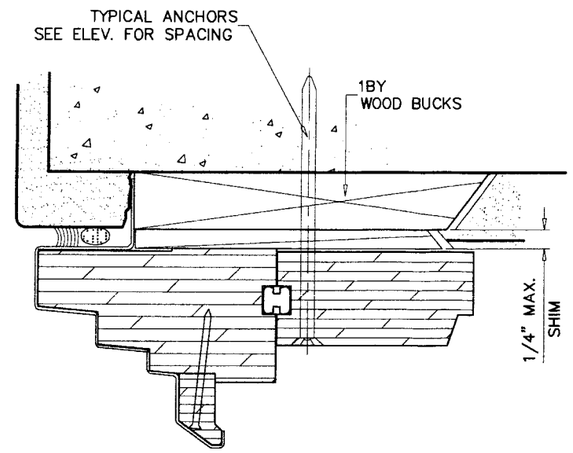

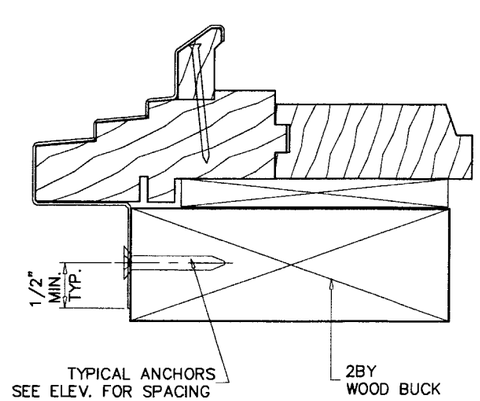

WOOD BUCKS NOT BY ANDERSEN, MUST SUSTAIN LOADS IMPOSED BY GLAZING SYSTEM AND TRANSFER THEM TO THE BUILDING STRUCTURE.

TYPICAL ANCHORS

ANCHORS THRU INSTALLATION FLANGE

ROOFING NAILS, 11GA. X 1-3/4" LONG

INTO 2BY WOOD BUCKS OR WOOD STRUCTURE

#8 SMS

INTO 2BY WOOD BUCKS OR WOOD STRUCTURE
1-1/2" MIN. PENETRATION INTO WOOD

ANCHORS THRU WINDOW FRAME

#12 SMS

INTO 2BY WOOD BUCKS OR WOOD STRUCTURE
1-1/2" MIN. PENETRATION INTO WOOD

1/4" DIA. TAPCONS

INTO 2BY WOOD BUCKS OR WOOD STRUCTURE
1-1/2" MIN. PENETRATION INTO WOOD

THRU WOOD BUCKS INTO MASONRY OR DIRECTLY INTO MASONRY
1-1/4" MIN. EMBED INTO CONC. OR MASONRY

ANCHORS THRU INSTALLATION CLIPS

A: #8 SMS

INTO 2BY WOOD BUCKS OR WOOD STRUCTURE
1-1/2" MIN. PENETRATION INTO WOOD

B: 1/4" DIA. TAPCONS

INTO 2BY WOOD BUCKS OR WOOD STRUCTURE
1-1/2" MIN. PENETRATION INTO WOOD

THRU WOOD BUCKS INTO MASONRY OR DIRECTLY INTO MASONRY
1-1/4" MIN. EMBED INTO CONC. OR MASONRY

TYPICAL EDGE DISTANCE

INTO CONCRETE AND MASONRY = 1-1/2" MIN.
INTO WOOD STRUCTURE = 3/4" MIN.

WINDOW DESCRIPTION
CTN20
CTN24
CTN28
CTN30
CTN34
CTN28-2
CTN30-2

Engr: DR. HUMAYOUN FAROOQ
STRUCTURES
FLA. PE # 16557
C.A.N. 3538

FEB 28 2007

PRODUCT REVISED
as complying with the Florida Building Code
Acceptance No. 06-0711.07
Expiration Date 11/25/2009
By _____
Miami Dade Product Control Division

AL-FAROOQ CORPORATION
ENGINEERS & PRODUCT DEVELOPMENT
1235 S.W. 87 AVE
MIAMI, FLORIDA 33174
TEL. (305) 264-8100 FAX. (305) 262-6978
COMP-ANL\W03-116AC

VINYL CLAD DIRECT SET FIXED WOOD WINDOWS

ANDERSEN CORPORATION
100 FOURTH AVE. NORTH
BAYPORT, MN. 55003-1096
TEL. (800) 426-7691 FAX (-)

revisions:

no	date	by	description
A	09.09.04		REV. PER BCCO COMMENTS
B	05.09.06		UPDTED FOR 2004 FBC
C	02.27.07		NO CHANGE THIS SHEET

date: 12-24-03
scale: 1/2" = 1"
dr. by: HAMID
chk. by:

drawing no.
W03-116

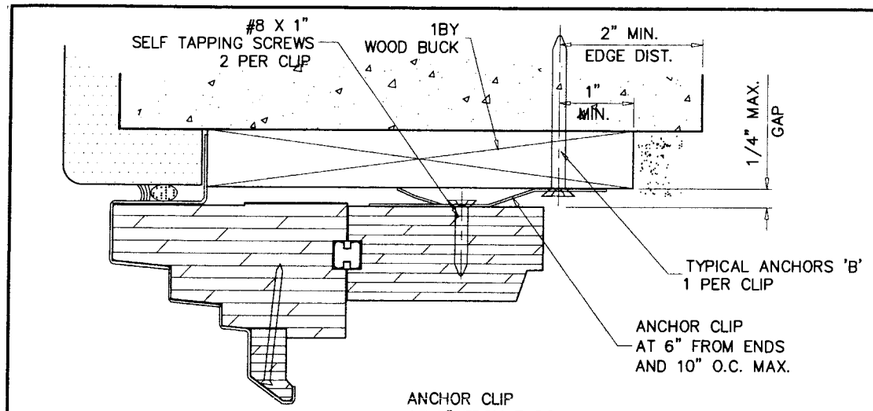

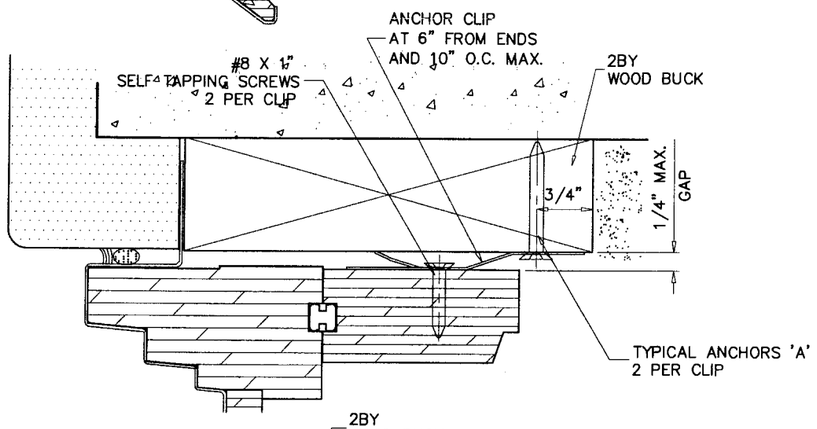

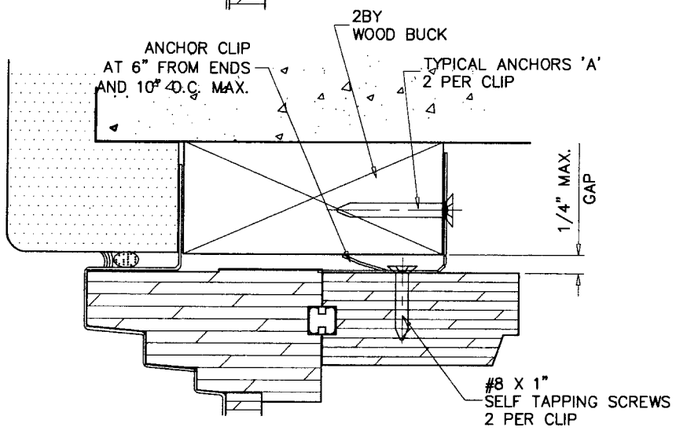

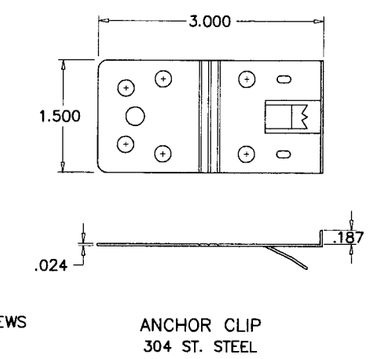

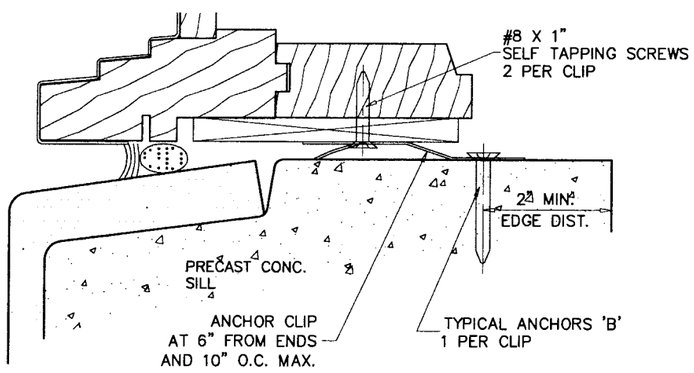

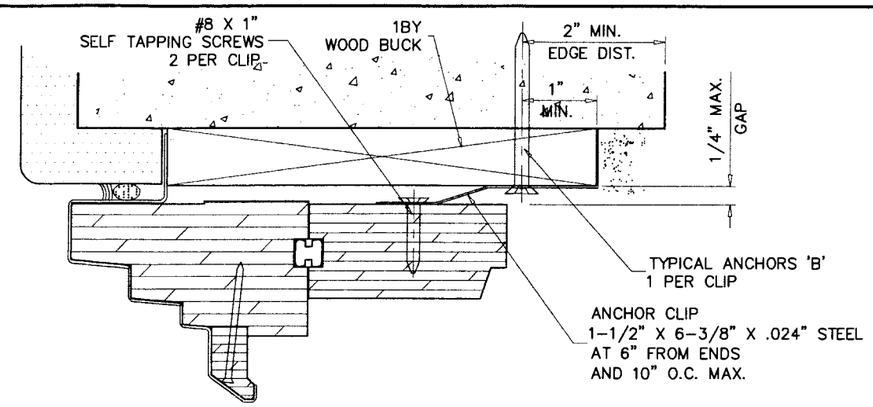

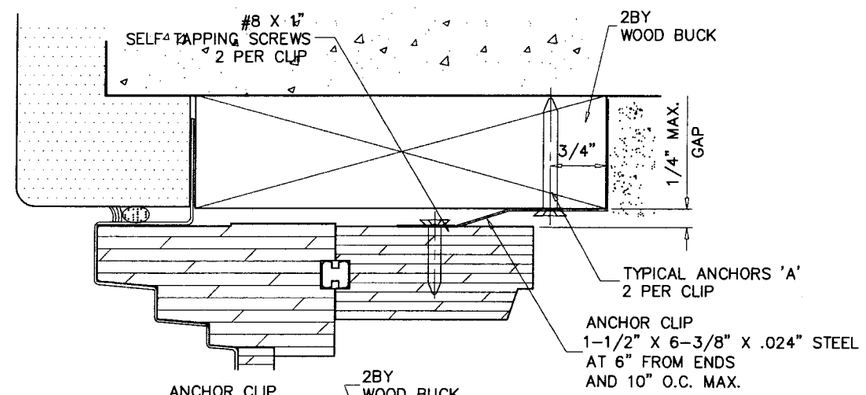

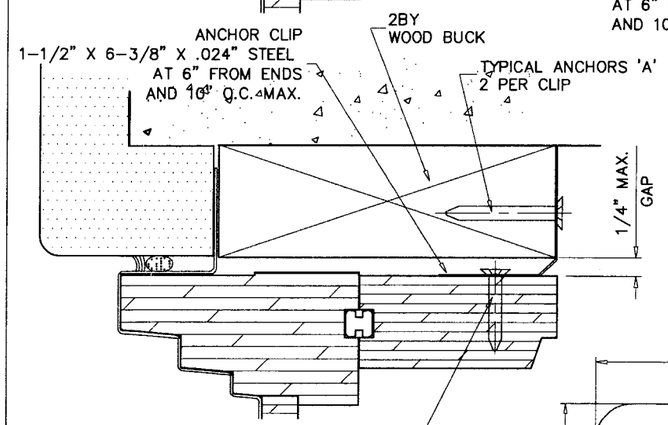

WINDOW DESCRIPTION
CTN20
CTN24
CTN28
CTN30
CTN34
CTN28-2
CTN30-2

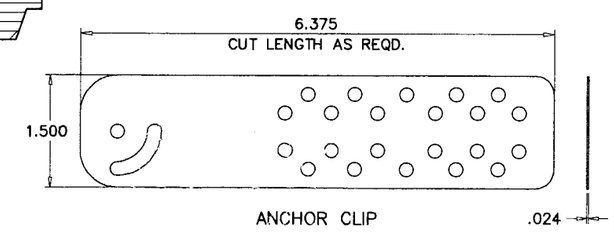

Engr: DR. HUMAYOUN FAROOQ
STRUCTURES
FLA. PE # 16557
C.A.N. 3538

PRODUCT REVISED
as complying with the Florida Buiding Code
Acceptance No 06-0711.07
Expiration Date 11/25/2009
By _____
Miami Dade Product Control Division

CLIP INSTALLATION DETAILS

AL-FAROOQ CORPORATION
ENGINEERS & PRODUCT DEVELOPMENT
1235 S.W. 87 AVE
MIAMI, FLORIDA 33174
TEL. (305) 264-8100 FAX. (305) 262-6978
COMP-ANL\W03-116AC

VINYL CLAD DIRECT SET FIXED WOOD WINDOWS

ANDERSEN CORPORATION
100 FOURTH AVE. NORTH
BAYPORT, MN. 55003-1096
TEL. (800) 426-7691 FAX (-)

revisions:

no	date	by	description
A	09.09.04		REV. PER BCCO COMMENTS
B	05.09.06		UPDTED FOR 2004 FBC
C	02.27.07		NO CHANGE THIS SHEET

date: 12-24-03
scale: 1/2" = 1"
dr. by: HAMID
chk. by:

drawing no.
W03-116

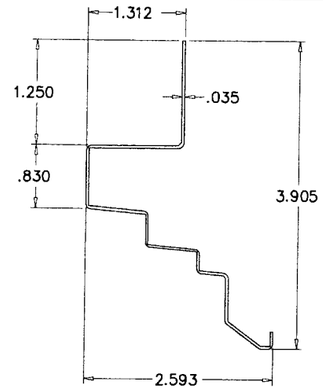

VINYL CLADDING (HEAD)

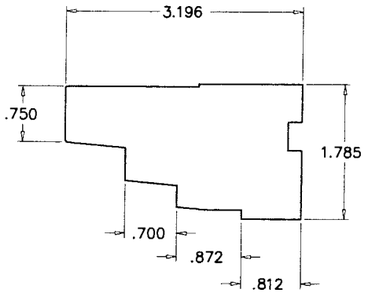

FRAME HEAD

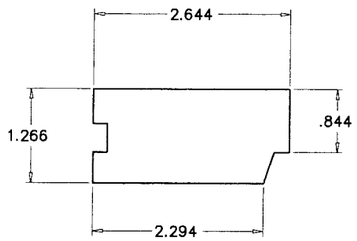

INTERIOR FRAME (HEAD)

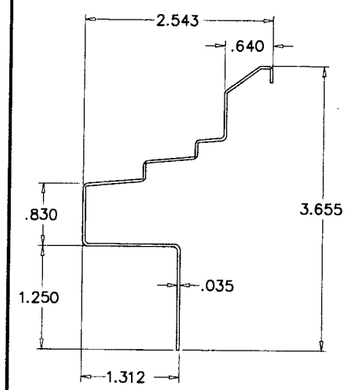

VINYL CLADDING (SILL)

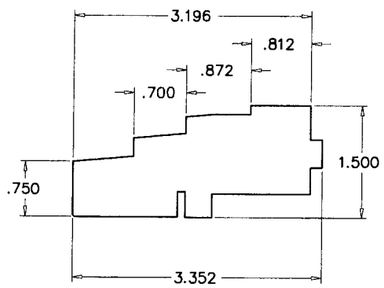

FRAME SILL

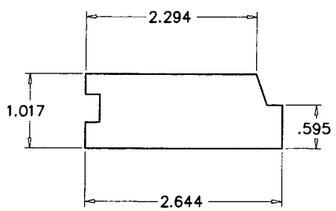

INTERIOR FRAME (SILL)

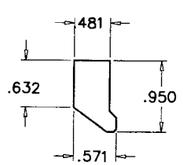

EXTERIOR GLASS STOP (HEAD)

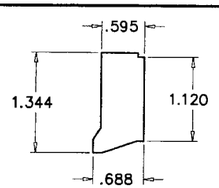

INTERIOR GLASS STOP (HEAD)

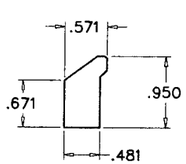

EXTERIOR GLASS STOP (SILL)

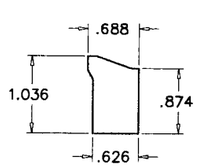

INTERIOR GLASS STOP (SILL)

ITEM #	PART NO.	REQD.	DESCRIPTION	MATERIAL	MANF./SUPPLIER/REMARKS
1	27134	1	FRAME HEAD	WOOD	ANDERSEN
2	27122	1	FRAME SILL	WOOD	ANDERSEN
3	27125/27006	1	FRAME COVER (HEAD)	VINYL	–
4	27125/27006	1	FRAME COVER (SILL)	VINYL	–
5	27132	1	FRAME INTERIOR (HEAD)	WOOD	ANDERSEN
6	27133	1	FRAME INTERIOR (SILL)	WOOD	ANDERSEN
7	27117	1	EXTERIOR GLASS STOP (HEAD)	WOOD	ANDERSEN
8	27118	1	EXTERIOR GLASS STOP (SILL)	WOOD	ANDERSEN
9	27123	1	INTERIOR GLASS STOP (HEAD)	WOOD	ANDERSEN
10	27124	–	INTERIOR GLASS STOP (SILL)	WOOD	ANDERSEN
11	–	AS REQD.	GLAZING COMPOUND	SILICONE	DOW OR GE
12	20065	AS REQD.	SETTING BLOCK SPACER	–	–
13	27255	–	GALVANIZED NAILS AT 7" O.C.	–	16 GA. X 1-3/4"
14	–	AS REQD.	FILLET BEAD	SILICONE	DOW

NON CURVED PROFILES COMPOSED OF YELLOW PINE, PONDEROSA PINE OR EQUAL.
CURVED PROFILES COMPOSED OF LAMINATED YELLOW POPLAR, MAPLE OR SELECT HARD WOODS.

WINDOW DESCRIPTION
CTN20
CTN24
CTN28
CTN30
CTN34
CTN28-2
CTN30-2

Engr: DR. HUMAYOUN FAROOQ
STRUCTURES
FLA. PE # 16557
C.A.N. 3538

FEB 26 2007

PRODUCT REVISED
as complying with the Florida Building Code
Acceptance No. 06-0711.07
Expiration Date 11/25/2009
By
Miami Dade Product Control Division

AL-FAROOQ CORPORATION
ENGINEERS & PRODUCT DEVELOPMENT
1235 S.W. 87 AVE
MIAMI, FLORIDA 33174
TEL. (305) 264-8100 FAX. (305) 262-6978

COMP-ANL\W03-116AC

VINYL CLAD DIRECT SET FIXED WOOD WINDOWS

ANDERSEN CORPORATION
100 FOURTH AVE. NORTH
BAYPORT, MN. 55003-1096
TEL. (800) 426-7691 FAX (-)

revisions:

no	date	by	description
A	09.09.04		REV. PER BCCO COMMENTS
B	05.09.06		UPDTED FOR 2004 FBC
C	02.27.07		NO CHANGE THIS SHEET

date: 12-24-03
scale: 1/2" = 1"
dr. by: HAMID
chk. by:

drawing no.
W03-116

DESIGN LOAD CAPACITY – PSF													
WINDOW DESCRIPTION	UNIT WIDTH INCHES	UNIT HT. INCHES	GLASS TYPE 'A'				GLASS TYPE 'B'				ANCHOR SPACING		
			E1300-98		E1300-02		E1300-98		E1300-02				
			EXT.(+)	INT.(–)	EXT.(+)	INT.(–)	EXT.(+)	INT.(–)	EXT.(+)	INT.(–)	FIN ANCHORS	FRAME ANCHORS	CLIP ANCHORS
ET8	95–1/4	21	54.1	54.1	66.0	66.0	75.0	100.0	75.0	100.0	4" O.C.	7" O.C.	18" O.C.
ET6	71–1/4	16–3/4	75.0	100.0	75.0	100.0	75.0	100.0	75.0	100.0	4" O.C.	7" O.C.	18" O.C.

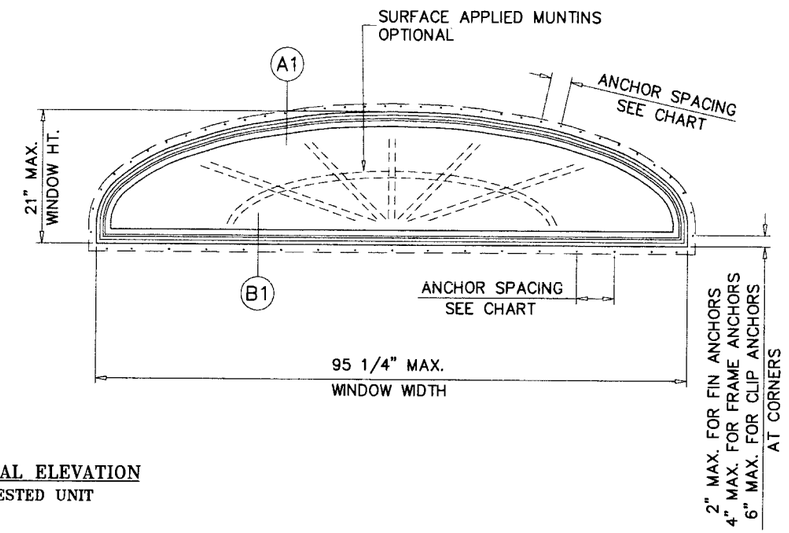

TYPICAL ELEVATION
TESTED UNIT

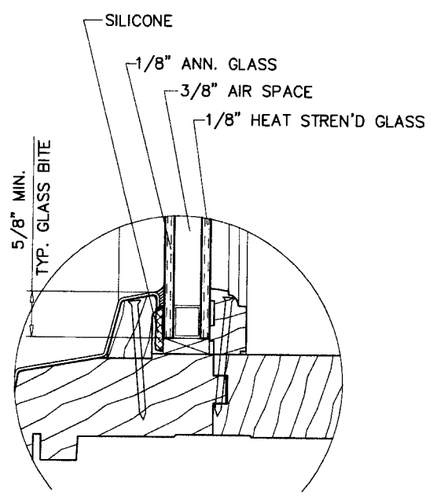

GLASS TYPE 'A'
5/8" OVERALL INSULATING GLASS

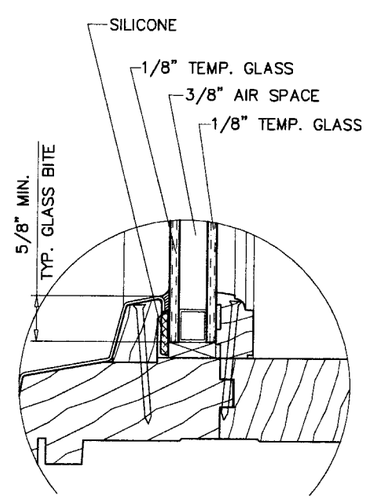

GLASS TYPE 'B'
5/8" OVERALL INSULATING GLASS

GLAZING OPTIONS

NOTE:
GLASS CAPACITIES ON THIS SHEET ARE BASED ON
A: ASTM E1300–98 (60 SEC. WIND)
B: ASTM E1300–02 (3 SEC. GUSTS)

WINDOW DESCRIPTION
ET8
ET6

Engr: DR. HUMAYOUN FAROOQ
STRUCTURES
FLA. PE # 16557
C.A.N. 3538

PRODUCT REVISED
as complying with the Florida
Buiding Code
Acceptance No 06-0711.07
Expiration Date 11/25/2009
By
Miami Dade Product Control
Division

AL-FAROOQ CORPORATION
ENGINEERS & PRODUCT DEVELOPMENT
1235 S.W. 87 AVE
MIAMI, FLORIDA 33174
TEL. (305) 264-8100 FAX. (305) 262-6978

COMP–ANL\W03–116AC

VINYL CLAD DIRECT SET FIXED WOOD WINDOWS

ANDERSEN CORPORATION
100 FOURTH AVE. NORTH
BAYPORT, MN. 55003–1096
TEL. (800) 426–7691 FAX (–)

revisions:

no	date	by	description
A	09.09.04		REV. PER BCCO COMMENTS
B	05.09.06		UPDTED FOR 2004 FBC
C	02.27.07		GLASS THK. REV.

date: 12–24–03
scale: 1/2"=1'–0"
dr. by: HAMID
chk. by:

drawing no.
W03–116

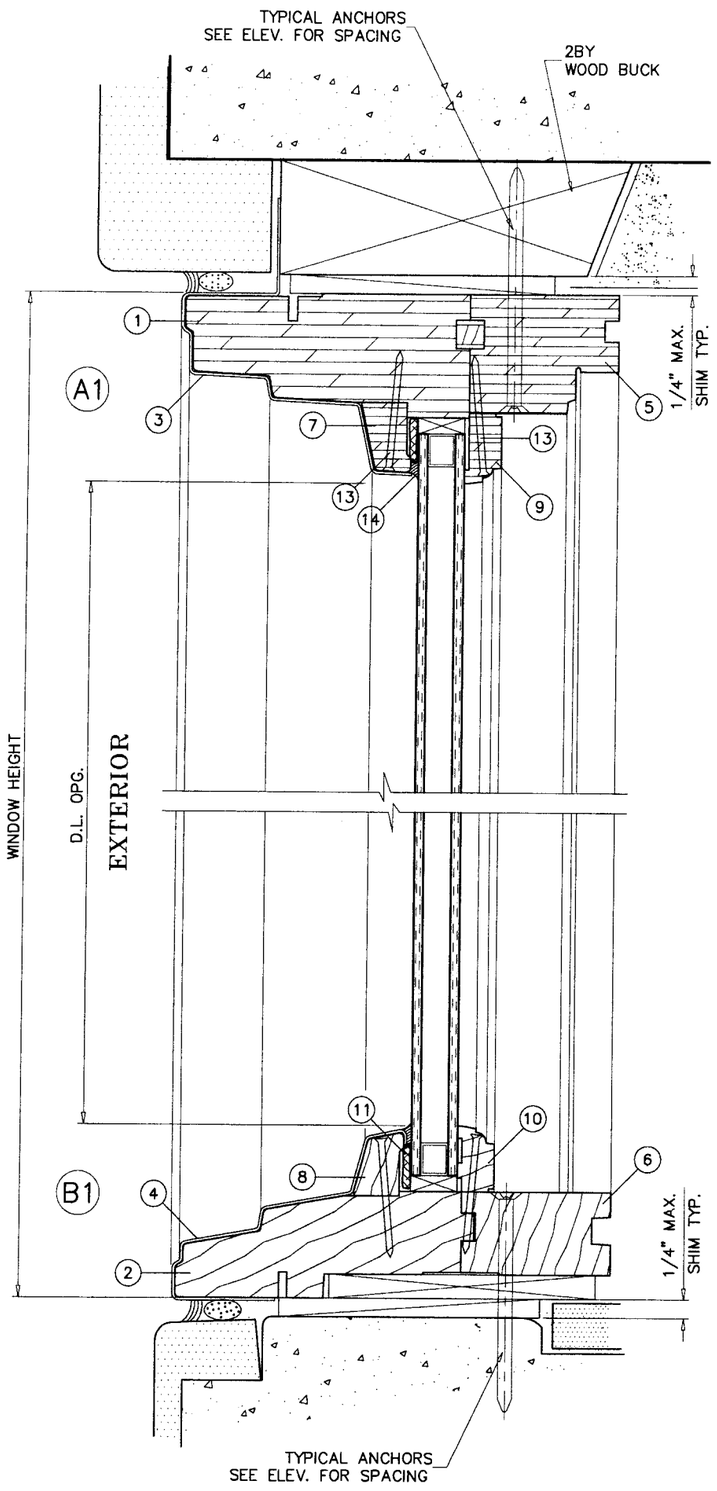

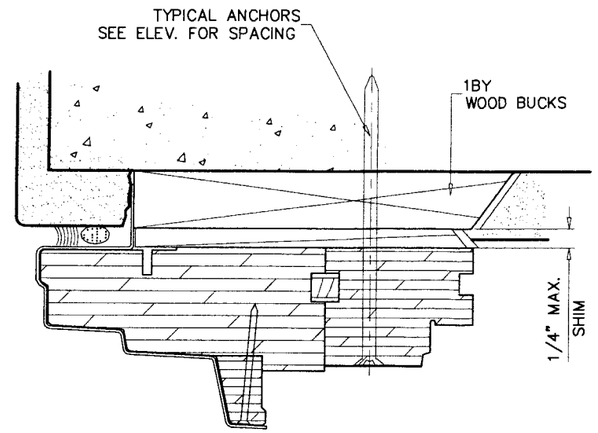

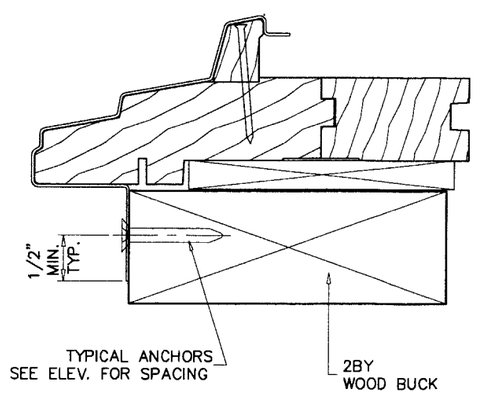

WOOD BUCKS NOT BY ANDERSEN, MUST SUSTAIN LOADS IMPOSED BY GLAZING SYSTEM AND TRANSFER THEM TO THE BUILDING STRUCTURE.

TYPICAL ANCHORS

ANCHORS THRU INSTALLATION FLANGE

ROOFING NAILS, 11GA. X 1-3/4" LONG
INTO 2BY WOOD BUCKS OR WOOD STRUCTURE

#8 SMS
INTO 2BY WOOD BUCKS OR WOOD STRUCTURE
1-1/2" MIN. PENETRATION INTO WOOD

ANCHORS THRU WINDOW FRAME

#12 SMS
INTO 2BY WOOD BUCKS OR WOOD STRUCTURE
1-1/2" MIN. PENETRATION INTO WOOD

1/4" DIA. TAPCONS
INTO 2BY WOOD BUCKS OR WOOD STRUCTURE
1-1/2" MIN. PENETRATION INTO WOOD

THRU WOOD BUCKS INTO MASONRY OR DIRECTLY INTO MASONRY
1-1/4" MIN. EMBED INTO CONC. OR MASONRY

ANCHORS THRU INSTALLATION CLIPS

A: #8 SMS
INTO 2BY WOOD BUCKS OR WOOD STRUCTURE
1-1/2" MIN. PENETRATION INTO WOOD

B: 1/4" DIA. TAPCONS
INTO 2BY WOOD BUCKS OR WOOD STRUCTURE
1-1/2" MIN. PENETRATION INTO WOOD

THRU WOOD BUCKS INTO MASONRY OR DIRECTLY INTO MASONRY
1-1/4" MIN. EMBED INTO CONC. OR MASONRY

TYPICAL EDGE DISTANCE

INTO CONCRETE AND MASONRY = 1-1/2" MIN.
INTO WOOD STRUCTURE = 3/4" MIN.

WINDOW DESCRIPTION
ET8
ET6

Engr: DR. HUMAYOUN FAROOQ
STRUCTURES
FLA. PE # 16557
C.A.N. 3538

PRODUCT REVISED
as complying with the Florida Building Code
Acceptance No 06-0711.07
Expiration Date 11/25/2009
By
Miami Dade Product Control Division

AL-FAROOQ CORPORATION
ENGINEERS & PRODUCT DEVELOPMENT
1235 S.W. 87 AVE
MIAMI, FLORIDA 33174
TEL. (305) 264-8100 FAX. (305) 262-6978
COMP-ANL\W03-116AC

VINYL CLAD DIRECT SET FIXED WOOD WINDOWS

ANDERSEN CORPORATION
100 FOURTH AVE. NORTH
BAYPORT, MN. 55003-1096
TEL. (800) 426-7691 FAX (-)

revisions:

no	date	by	description
A	09.09.04		REV. PER BCCO COMMENTS
B	05.09.06		UPDTED FOR 2004 FBC
C	02.27.07		NO CHANGE THIS SHEET

date: 12-24-03
scale: 1/2" = 1"
dr. by: HAMID
chk. by:

drawing no.
W03-116

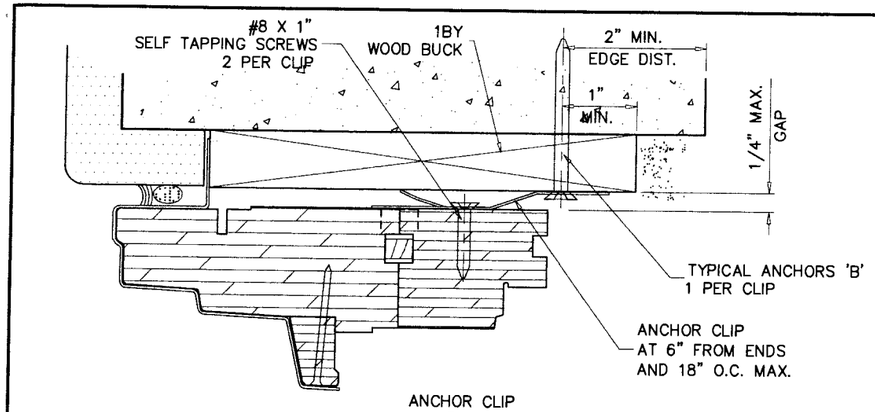

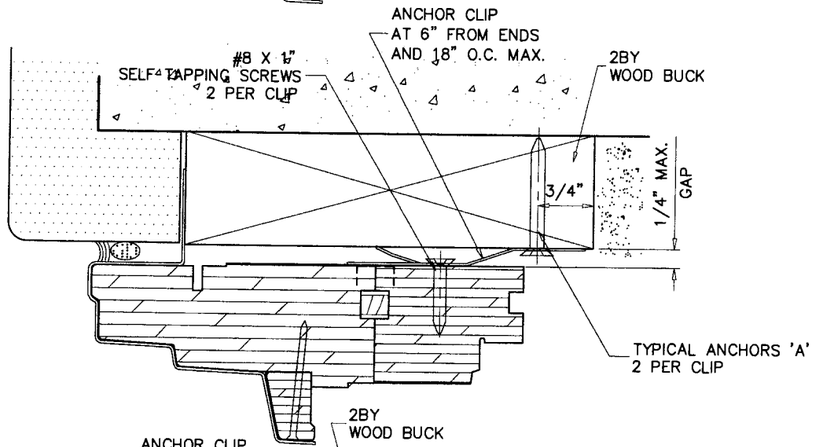

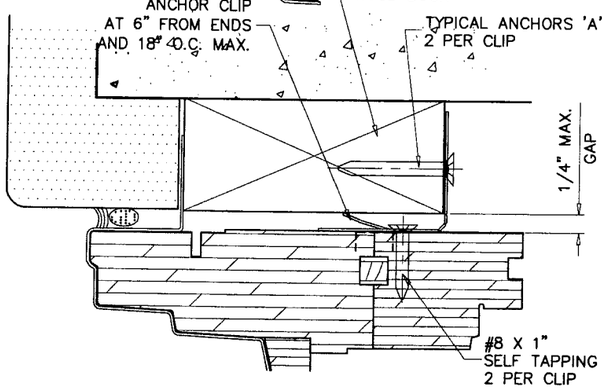

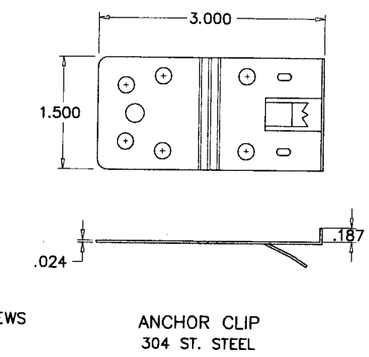

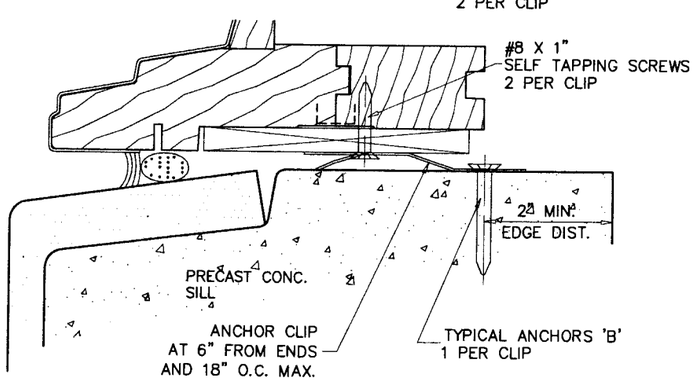

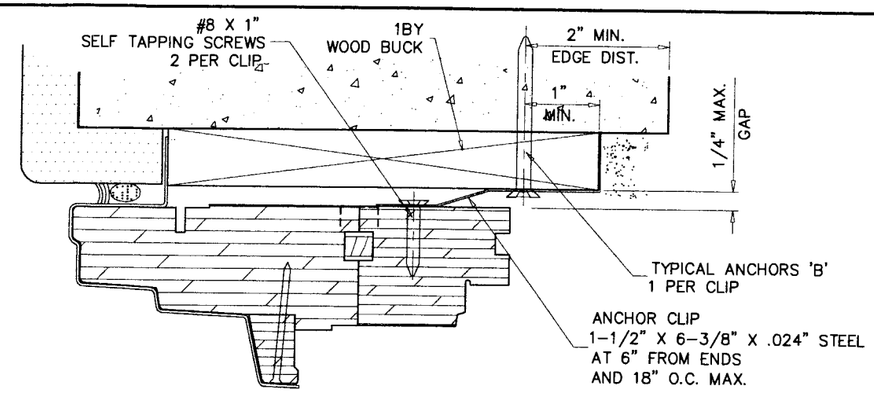

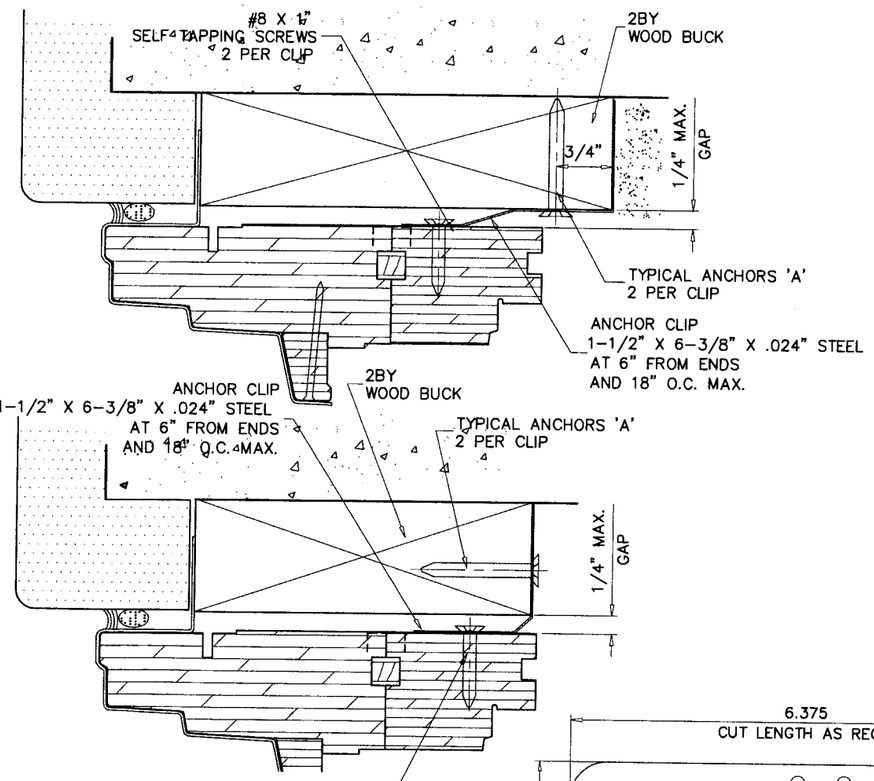

WINDOW DESCRIPTION
ET8
ET6

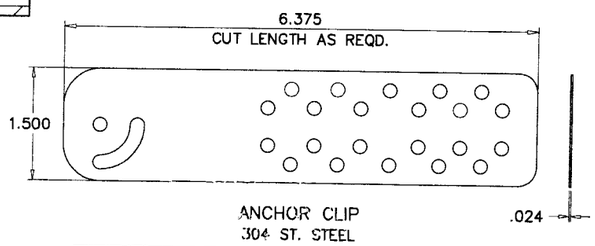

Engr: DR. HUMAYOUN FAROOQ
STRUCTURES
FLA. PE # 16557
C.A.N. 3538

PRODUCT REVISED
In complying with the Florida Building Code
Acceptance No. 06-0711.07
Expiration Date 11/25/2009
By
Miami-Dade Product Control Division

CLIP INSTALLATION DETAILS

AL-FAROOQ CORPORATION
ENGINEERS & PRODUCT DEVELOPMENT
1235 S.W. 87 AVE
MIAMI, FLORIDA 33174
TEL. (305) 264-8100 FAX. (305) 262-6978
COMP-ANL\W03-116AC

VINYL CLAD DIRECT SET FIXED WOOD WINDOWS

ANDERSEN CORPORATION
100 FOURTH AVE. NORTH
BAYPORT, MN. 55003-1096
TEL. (800) 426-7691 FAX (-)

revisions:

no	date	by	description
A	09.09.04		REV. PER BCCO COMMENTS
B	05.09.06		UPDTED FOR 2004 FBC
C	02.27.07		NO CHANGE THIS SHEET

date: 12-24-03
scale: 1/2" = 1"
dr. by: HAMID
chk. by:

drawing no.
W03-116

sheet 12 of 18

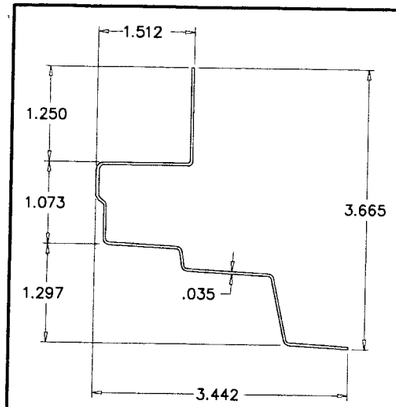

VINYL CLADDING (HEAD)

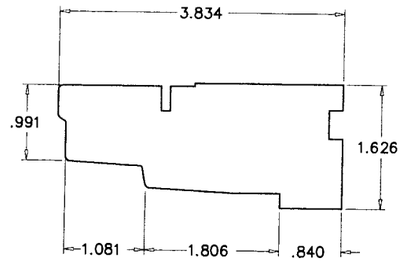

FRAME HEAD

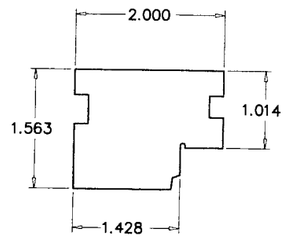

INTERIOR FRAME (HEAD)

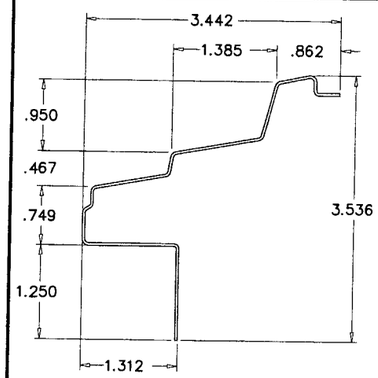

VINYL CLADDING (SILL)

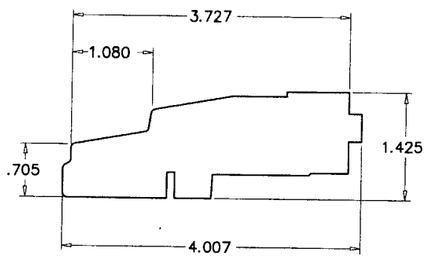

FRAME SILL

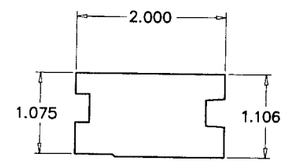

INTERIOR FRAME (SILL)

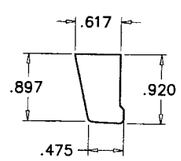

EXTERIOR GLASS STOP (HEAD)

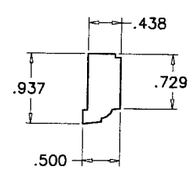

INTERIOR GLASS STOP (HEAD)

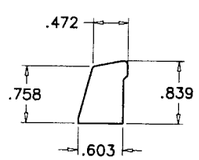

EXTERIOR GLASS STOP (SILL)

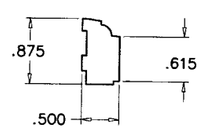

INTERIOR GLASS STOP (SILL)

ITEM #	PART NO.	REQD.	DESCRIPTION	MATERIAL	MANF./SUPPLIER/REMARKS
1	53102	1	FRAME HEAD	WOOD	ANDERSEN
2	53103	1	FRAME SILL	WOOD	ANDERSEN
3	53108	1	FRAME COVER (HEAD)	VINYL	–
4	53108	1	FRAME COVER (SILL)	VINYL	–
5	53110	1	FRAME INTERIOR (HEAD)	WOOD	ANDERSEN
6	53111	1	FRAME INTERIOR (SILL)	WOOD	ANDERSEN
7	53115	1	EXTERIOR GLASS STOP (HEAD)	WOOD	ANDERSEN
8	53116	1	EXTERIOR GLASS STOP (SILL)	WOOD	ANDERSEN
9	53071	1	INTERIOR GLASS STOP (HEAD)	WOOD	ANDERSEN
10	53120	–	INTERIOR GLASS STOP (SILL)	WOOD	ANDERSEN
11	–	AS REQD.	GLAZING COMPOUND	SILICONE	DOW OR GE
12	20065	AS REQD.	SETTING BLOCK SPACER	–	–
13	27255	–	GALVANIZED NAILS AT 7" O.C.	–	16 GA. X 1-3/4"
14	–	AS REQD.	FILLET BEAD	SILICONE	DOW

NON CURVED PROFILES COMPOSED OF YELLOW PINE, PONDEROSA PINE OR EQUAL.
CURVED PROFILES COMPOSED OF LAMINATED YELLOW POPLAR, MAPLE OR SELECT HARD WOODS.

WINDOW DESCRIPTION
ET8
ET6

Engr: DR. HUMAYOUN FAROOQ
STRUCTURES
FLA. PE # 16557
C.A.N. 3538

PRODUCT REVISED
as complying with the Florida Building Code
Acceptance No 06-0711.07
Expiration Date 11/25/2009
By
Miami-Dade Product Control Division

AL-FAROOQ CORPORATION
ENGINEERS & PRODUCT DEVELOPMENT
1235 S.W. 87 AVE
MIAMI, FLORIDA 33174
TEL. (305) 264-8100 FAX. (305) 262-6978

COMP-ANL\W03-116AC

VINYL CLAD DIRECT SET FIXED WOOD WINDOWS

ANDERSEN CORPORATION
100 FOURTH AVE. NORTH
BAYPORT, MN. 55003-1096
TEL. (800) 426-7691 FAX (-)

revisions:

no	date	by	description
A	09.09.04		REV. PER BCCO COMMENTS
B	05.09.06		UPDTED FOR 2004 FBC
C	02.27.07		NO CHANGE THIS SHEET

date: 12-24-03
scale: 1/2" = 1"
dr. by: HAMID
chk. by:

drawing no.
W03-116

DESIGN LOAD CAPACITY – PSF

WINDOW DESCRIPTION	UNIT WIDTH INCHES	UNIT HT. INCHES	GLASS TYPE 'A' E1300-98 EXT.(+)	GLASS TYPE 'A' E1300-98 INT.(–)	GLASS TYPE 'A' E1300-02 EXT.(+)	GLASS TYPE 'A' E1300-02 INT.(–)	GLASS TYPE 'A1' E1300-98 EXT.(+)	GLASS TYPE 'A1' E1300-98 INT.(–)	GLASS TYPE 'A1' E1300-02 EXT.(+)	GLASS TYPE 'A1' E1300-02 INT.(–)	GLASS TYPE 'B1' OR 'B' E1300-98 EXT.(+)	GLASS TYPE 'B1' OR 'B' E1300-98 INT.(–)	GLASS TYPE 'B1' OR 'B' E1300-02 EXT.(+)	GLASS TYPE 'B1' OR 'B' E1300-02 INT.(–)	ANCHOR SPACING FIN ANCHORS	ANCHOR SPACING FRAME ANCHORS	ANCHOR SPACING CLIP ANCHORS
PTR3010	35–15/16	12	70.0	70.0	70.0	70.0	70.0	70.0	70.0	70.0	70.0	70.0	70.0	70.0	3" O.C.	12" O.C.	18" O.C.
PTR3510	40–13/16		70.0	70.0	70.0	70.0	70.0	70.0	70.0	70.0	70.0	70.0	70.0	70.0	3" O.C.	12" O.C.	18" O.C.
PTR4010	48		70.0	70.0	70.0	70.0	70.0	70.0	70.0	70.0	70.0	70.0	70.0	70.0	3" O.C.	12" O.C.	18" O.C.
PTR4510	52–13/16		70.0	70.0	70.0	70.0	70.0	70.0	70.0	70.0	70.0	70.0	70.0	70.0	3" O.C.	12" O.C.	18" O.C.
PTR5010	59–7/8		70.0	70.0	70.0	70.0	70.0	70.0	70.0	70.0	70.0	70.0	70.0	70.0	3" O.C.	12" O.C.	18" O.C.
PTR5510	64–13/16		70.0	70.0	70.0	70.0	70.0	70.0	70.0	70.0	70.0	70.0	70.0	70.0	3" O.C.	12" O.C.	18" O.C.
PTR6010	71–7/8		70.0	70.0	70.0	70.0	70.0	70.0	70.0	70.0	70.0	70.0	70.0	70.0	3" O.C.	12" O.C.	18" O.C.
P3030	35–15/16	35–15/16	70.0	70.0	70.0	70.0	70.0	70.0	70.0	70.0	70.0	70.0	70.0	70.0	3" O.C.	12" O.C.	18" O.C.
P3530	40–13/16		70.0	70.0	70.0	70.0	70.0	70.0	70.0	70.0	70.0	70.0	70.0	70.0	3" O.C.	12" O.C.	18" O.C.
P4030	48		67.7	67.7	70.0	70.0	70.0	70.0	70.0	70.0	70.0	70.0	70.0	70.0	3" O.C.	12" O.C.	18" O.C.
P4530	52–13/16		60.6	60.6	70.0	70.0	70.0	70.0	70.0	70.0	70.0	70.0	70.0	70.0	3" O.C.	12" O.C.	18" O.C.
P5030	59–7/8		52.0	52.0	69.9	69.9	66.3	66.3	70.0	70.0	70.0	70.0	70.0	70.0	3" O.C.	12" O.C.	18" O.C.
P5530	64–13/16		46.8	46.8	61.9	61.9	59.1	59.1	70.0	70.0	70.0	70.0	70.0	70.0	3" O.C.	12" O.C.	18" O.C.
P6030	71–7/8		40.2	40.2	53.9	53.9	50.9	50.9	68.4	68.4	70.0	70.0	70.0	70.0	3" O.C.	12" O.C.	18" O.C.
P3035	35–15/16	40–13/16	70.0	70.0	70.0	70.0	70.0	70.0	70.0	70.0	70.0	70.0	70.0	70.0	3" O.C.	12" O.C.	18" O.C.
P3535	40–13/16		70.0	70.0	70.0	70.0	70.0	70.0	70.0	70.0	70.0	70.0	70.0	70.0	3" O.C.	12" O.C.	18" O.C.
P4035	48		61.2	61.2	70.0	70.0	70.0	70.0	70.0	70.0	70.0	70.0	70.0	70.0	3" O.C.	12" O.C.	18" O.C.
P4535	52–13/16		55.7	55.7	70.0	70.0	70.0	70.0	70.0	70.0	70.0	70.0	70.0	70.0	3" O.C.	12" O.C.	18" O.C.
P5035	59–7/8		49.3	49.3	63.6	63.6	64.6	64.6	70.0	70.0	70.0	70.0	70.0	70.0	3" O.C.	12" O.C.	18" O.C.
P5535	64–13/16		45.1	45.1	58.5	58.5	58.0	58.0	70.0	70.0	70.0	70.0	70.0	70.0	3" O.C.	12" O.C.	18" O.C.
P6035	71–7/8		–	–	–	–	50.6	50.6	68.4	68.4	70.0	70.0	70.0	70.0	3" O.C.	12" O.C.	18" O.C.
P3040	35–15/16	48	67.7	67.7	70.0	70.0	70.0	70.0	70.0	70.0	70.0	70.0	70.0	70.0	3" O.C.	12" O.C.	18" O.C.
P3540	40–13/16		61.2	61.2	70.0	70.0	70.0	70.0	70.0	70.0	70.0	70.0	70.0	70.0	3" O.C.	12" O.C.	18" O.C.
P4040	48		52.6	52.6	68.0	68.0	70.0	70.0	70.0	70.0	70.0	70.0	70.0	70.0	3" O.C.	12" O.C.	18" O.C.
P4540	52–13/16		48.2	48.2	61.4	61.4	66.9	66.9	70.0	70.0	70.0	70.0	70.0	70.0	3" O.C.	12" O.C.	18" O.C.
P5040	59–7/8		42.6	42.6	54.5	54.5	59.4	59.4	70.0	70.0	70.0	70.0	70.0	70.0	3" O.C.	12" O.C.	18" O.C.
P5540	64–13/16		–	–	–	–	54.5	54.5	70.0	70.0	70.0	70.0	70.0	70.0	3" O.C.	12" O.C.	18" O.C.
P6040	71–7/8		–	–	–	–	49.0	49.0	64.5	64.5	70.0	70.0	70.0	70.0	3" O.C.	12" O.C.	18" O.C.
P3045	35–15/16	52–13/16	60.6	60.6	70.0	70.0	70.0	70.0	70.0	70.0	70.0	70.0	70.0	70.0	3" O.C.	12" O.C.	18" O.C.
P3545	40–13/16		55.7	55.7	70.0	70.0	70.0	70.0	70.0	70.0	70.0	70.0	70.0	70.0	3" O.C.	12" O.C.	18" O.C.
P4045	48		48.2	48.2	61.4	61.4	66.9	66.9	70.0	70.0	70.0	70.0	70.0	70.0	3" O.C.	12" O.C.	18" O.C.
P4545	52–13/16		44.0	44.0	56.1	56.1	61.6	61.6	70.0	70.0	70.0	70.0	70.0	70.0	3" O.C.	12" O.C.	18" O.C.
P5045	59–7/8		–	–	–	–	54.9	54.9	70.0	70.0	70.0	70.0	70.0	70.0	3" O.C.	12" O.C.	18" O.C.
P5545	64–13/16		–	–	–	–	51.0	51.0	65.9	65.9	70.0	70.0	70.0	70.0	3" O.C.	12" O.C.	18" O.C.
P6045	71–7/8		–	–	–	–	46.2	46.2	59.9	59.9	70.0	70.0	70.0	70.0	3" O.C.	12" O.C.	18" O.C.
P3050	35–15/16	59–7/8	52.0	52.0	69.9	69.9	66.3	66.3	70.0	70.0	70.0	70.0	70.0	70.0	3" O.C.	12" O.C.	18" O.C.
P3550	40–13/16		49.3	49.3	63.6	63.6	64.6	64.6	70.0	70.0	70.0	70.0	70.0	70.0	3" O.C.	12" O.C.	18" O.C.
P4050	48		42.6	42.6	54.5	54.5	59.4	59.4	70.0	70.0	70.0	70.0	70.0	70.0	3" O.C.	12" O.C.	18" O.C.
P4550	52–13/16		–	–	–	–	54.9	54.9	70.0	70.0	70.0	70.0	70.0	70.0	3" O.C.	12" O.C.	18" O.C.
P5050	59–7/8		–	–	–	–	49.4	49.4	63.0	63.0	70.0	70.0	70.0	70.0	3" O.C.	12" O.C.	18" O.C.
P5550	64–13/16		–	–	–	–	45.8	45.8	58.3	58.3	70.0	70.0	70.0	70.0	3" O.C.	12" O.C.	18" O.C.
P6050	71–7/8		–	–	–	–	41.4	41.4	53.3	53.3	70.0	70.0	70.0	70.0	3" O.C.	12" O.C.	18" O.C.
P3055	35–15/16	64–13/16	46.8	46.8	61.9	61.9	59.1	59.1	70.0	70.0	70.0	70.0	70.0	70.0	3" O.C.	12" O.C.	18" O.C.
P3555	40–13/16		45.1	45.1	58.5	58.5	58.0	58.0	70.0	70.0	70.0	70.0	70.0	70.0	3" O.C.	12" O.C.	18" O.C.
P4055	48		–	–	–	–	54.5	54.5	70.0	70.0	70.0	70.0	70.0	70.0	3" O.C.	12" O.C.	18" O.C.
P4555	52–13/16		–	–	–	–	51.0	51.0	65.9	65.9	70.0	70.0	70.0	70.0	3" O.C.	12" O.C.	18" O.C.
P5055	59–7/8		–	–	–	–	45.8	45.8	58.3	58.3	70.0	70.0	70.0	70.0	3" O.C.	12" O.C.	18" O.C.
P3060	35–15/16	71–7/8	40.2	40.2	53.9	53.9	50.9	50.9	68.5	68.5	70.0	70.0	70.0	70.0	3" O.C.	12" O.C.	18" O.C.
P3560	40–13/16		–	–	–	–	50.6	50.6	68.5	68.5	70.0	70.0	70.0	70.0	3" O.C.	12" O.C.	18" O.C.
P4060	48		–	–	–	–	49.0	49.0	64.5	64.5	70.0	70.0	70.0	70.0	3" O.C.	12" O.C.	18" O.C.
P4560	52–13/16		–	–	–	–	46.2	46.2	59.9	59.9	70.0	70.0	70.0	70.0	3" O.C.	12" O.C.	18" O.C.
P5060	59–7/8		–	–	–	–	41.4	41.4	53.3	53.3	70.0	70.0	70.0	70.0	3" O.C.	12" O.C.	18" O.C.

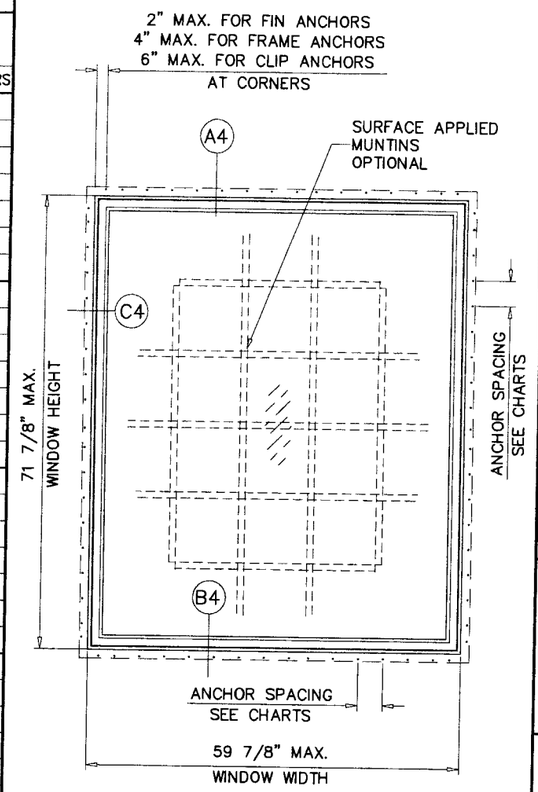

TYPICAL ELEVATION
TESTED UNIT

NOTE:
GLASS CAPACITIES ON THIS SHEET ARE BASED ON
A: ASTM E1300--98 (60 SEC. WIND)
B: ASTM E1300--02 (3 SEC. GUSTS)

WINDOW DESCRIPTION
PTR3010
PTR3510
PTR4010
PTR4510
PTR5010
PTR5510
PTR6010
P3030
P3530
P4030
P4530
P5030
P5530
P6030
P3035
P3535
P4035
P4535
P5035
P5535
P6035
P3040
P3540
P4040
P4540
P5040
P5540
P6040
P3045
P3545
P4045
P4545
P5045
P5545
P6045
P3050
P3550
P4050
P4550
P5050
P5550
P6050
P3055
P3555
P4055
P4555
P5055
P3060
P3560
P4060
P4560
P5060

Engr: DR. HUMAYOUN FAROOQ
STRUCTURES
FLA. PE # 16557
C.A.N. 3538

PRODUCT REVISED
as complying with the Florida Buiding Code
Acceptance No. 06-0711.07
Expiration Date 11/25/2009
By
Miami-Dade Product Control Division

AL-FAROOQ CORPORATION
ENGINEERS & PRODUCT DEVELOPMENT
1235 S.W. 87 AVE
MIAMI, FLORIDA 33174
TEL. (305) 264-8100 FAX. (305) 262-6978
COMP-ANL\W03-116AC

VINYL CLAD DIRECT SET FIXED WOOD WINDOWS

ANDERSEN CORPORATION
100 FOURTH AVE. NORTH
BAYPORT, MN. 55003-1096
TEL. (800) 426-7691 FAX (-)

revisions:

no	date	by	description
B	05.09.06		UPDTED FOR 2004 FBC
C	02.27.07		NO CHANGE THIS SHEET

date: 12-24-03
scale: 1/2"=1'-0"
dr. by: HAMID
chk. by:

drawing no.
W03-116

DESIGN LOAD CAPACITY – PSF

WINDOW DESCRIPTION	UNIT WIDTH INCHES	UNIT HT. INCHES	GLASS TYPE 'A' E1300-98 EXT.(+)	GLASS TYPE 'A' E1300-98 INT.(−)	GLASS TYPE 'A' E1300-02 EXT.(+)	GLASS TYPE 'A' E1300-02 INT.(−)	GLASS TYPE 'A1' E1300-98 EXT.(+)	GLASS TYPE 'A1' E1300-98 INT.(−)	GLASS TYPE 'A1' E1300-02 EXT.(+)	GLASS TYPE 'A1' E1300-02 INT.(−)	GLASS TYPE 'B1' OR 'B' E1300-98 EXT.(+)	GLASS TYPE 'B1' OR 'B' E1300-98 INT.(−)	GLASS TYPE 'B1' OR 'B' E1300-02 EXT.(+)	GLASS TYPE 'B1' OR 'B' E1300-02 INT.(−)	ANCHOR SPACING FIN ANCHORS	ANCHOR SPACING FRAME ANCHORS	ANCHOR SPACING CLIP ANCHORS
CTR1510	17	12	70.0	70.0	70.0	70.0	70.0	70.0	70.0	70.0	70.0	70.0	70.0	70.0	6" O.C.	12" O.C.	18" O.C.
CTR1810	20-1/2		70.0	70.0	70.0	70.0	70.0	70.0	70.0	70.0	70.0	70.0	70.0	70.0	6" O.C.	12" O.C.	18" O.C.
CTR2010	24-1/8		70.0	70.0	70.0	70.0	70.0	70.0	70.0	70.0	70.0	70.0	70.0	70.0	6" O.C.	12" O.C.	18" O.C.
CTR2410	28-3/8		70.0	70.0	70.0	70.0	70.0	70.0	70.0	70.0	70.0	70.0	70.0	70.0	6" O.C.	12" O.C.	18" O.C.
CTR2810	31-1/2		70.0	70.0	70.0	70.0	70.0	70.0	70.0	70.0	70.0	70.0	70.0	70.0	6" O.C.	12" O.C.	18" O.C.
CTR3010	33-15/16		70.0	70.0	70.0	70.0	70.0	70.0	70.0	70.0	70.0	70.0	70.0	70.0	6" O.C.	12" O.C.	18" O.C.
CTR2910	33-3/4		70.0	70.0	70.0	70.0	70.0	70.0	70.0	70.0	70.0	70.0	70.0	70.0	6" O.C.	12" O.C.	18" O.C.
CTR3410	40-3/4		70.0	70.0	70.0	70.0	70.0	70.0	70.0	70.0	70.0	70.0	70.0	70.0	6" O.C.	12" O.C.	18" O.C.
CTR4010	48		70.0	70.0	70.0	70.0	70.0	70.0	70.0	70.0	70.0	70.0	70.0	70.0	6" O.C.	12" O.C.	18" O.C.
CTR4810	56-1/2		70.0	70.0	70.0	70.0	70.0	70.0	70.0	70.0	70.0	70.0	70.0	70.0	6" O.C.	12" O.C.	18" O.C.
CTR5210	64-3/4		70.0	70.0	70.0	70.0	70.0	70.0	70.0	70.0	70.0	70.0	70.0	70.0	6" O.C.	12" O.C.	18" O.C.
CTR51110	71-5/8		70.0	70.0	70.0	70.0	70.0	70.0	70.0	70.0	70.0	70.0	70.0	70.0	6" O.C.	12" O.C.	18" O.C.
CTR6010	71-7/8		70.0	70.0	70.0	70.0	70.0	70.0	70.0	70.0	70.0	70.0	70.0	70.0	6" O.C.	12" O.C.	18" O.C.

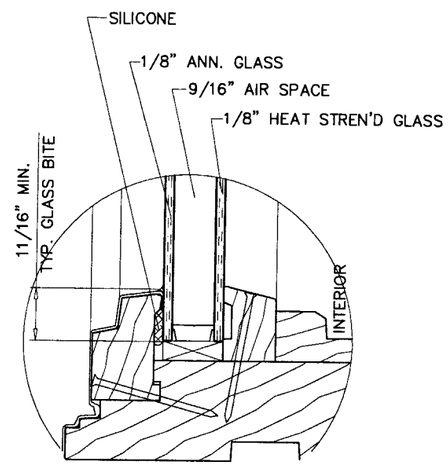

GLASS TYPE 'A'
13/16" OVERALL INSULATING GLASS

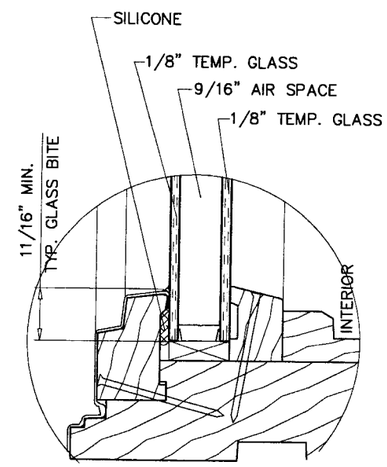

GLASS TYPE 'B'
13/16" OVERALL INSULATING GLASS

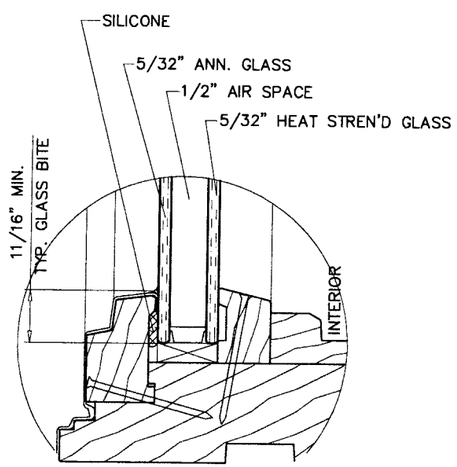

GLASS TYPE 'A1'
13/16" OVERALL INSULATING GLASS

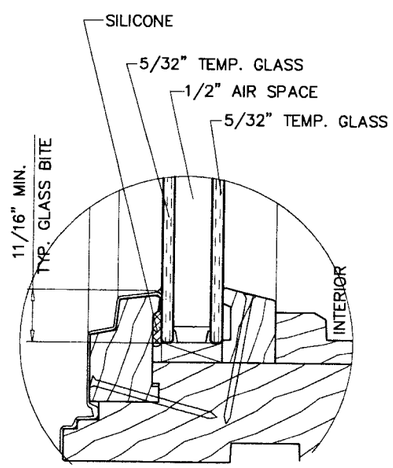

GLASS TYPE 'B1'
13/16" OVERALL INSULATING GLASS

GLAZING OPTIONS

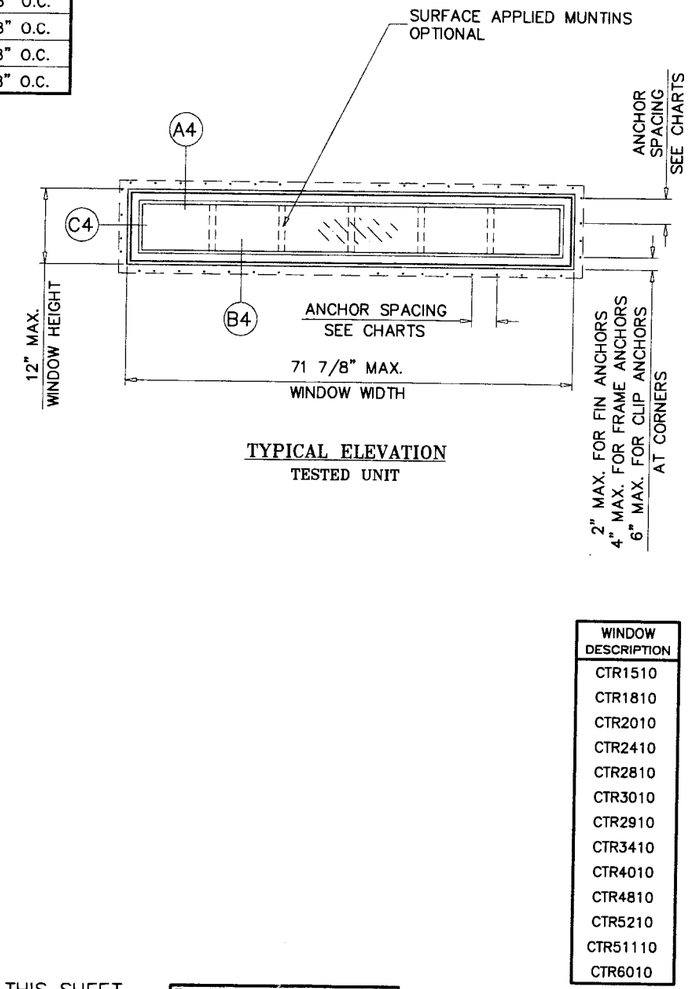

TYPICAL ELEVATION
TESTED UNIT

WINDOW DESCRIPTION
CTR1510
CTR1810
CTR2010
CTR2410
CTR2810
CTR3010
CTR2910
CTR3410
CTR4010
CTR4810
CTR5210
CTR51110
CTR6010

NOTE:
GLASS CAPACITIES ON THIS SHEET ARE BASED ON
A: ASTM E1300-98 (60 SEC. WIND)
B: ASTM E1300-02 (3 SEC. GUSTS)

Engr: DR. HUMAYOUN FAROOQ
STRUCTURES
FLA. PE # 16557
C.A.N. 3538

PRODUCT REVISED
as complying with the Florida Building Code
Acceptance No. 06-0711.07
Expiration Date 11/25/2009
By
Miami Dade Product Control Division

AL-FAROOQ CORPORATION
ENGINEERS & PRODUCT DEVELOPMENT
1235 S.W. 87 AVE
MIAMI, FLORIDA 33174
TEL. (305) 264-8100 FAX. (305) 262-6978

COMP-ANL \W03-116AC

VINYL CLAD DIRECT SET FIXED WOOD WINDOWS

ANDERSEN CORPORATION
100 FOURTH AVE. NORTH
BAYPORT, MN. 55003-1096
TEL. (800) 426-7691 FAX (-)

revisions:

no	date	by	description
B	05.09.06		UPDTED FOR 2004 FBC
C	02.27.07		GLASS THK. REV.

date: 12-24-03
scale: 1/2"=1'-0"
dr. by: HAMID
chk. by:

drawing no. W03-116

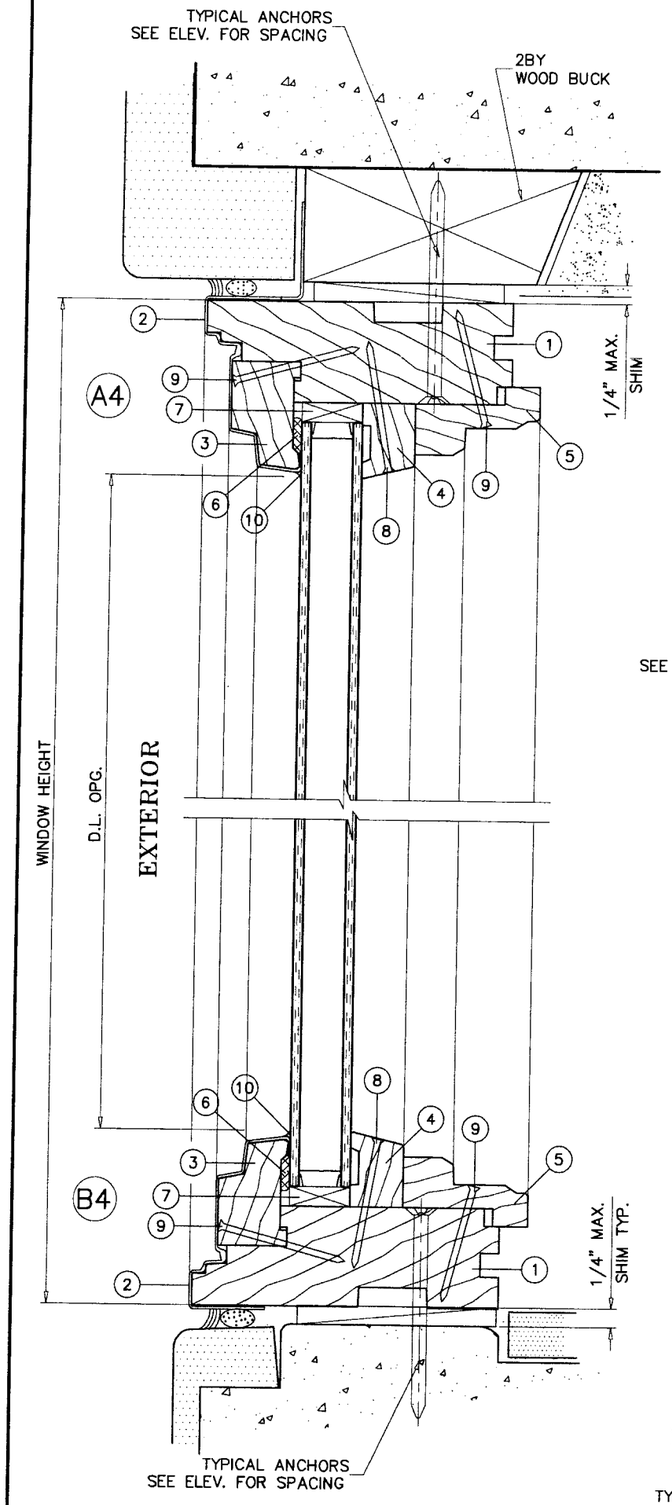

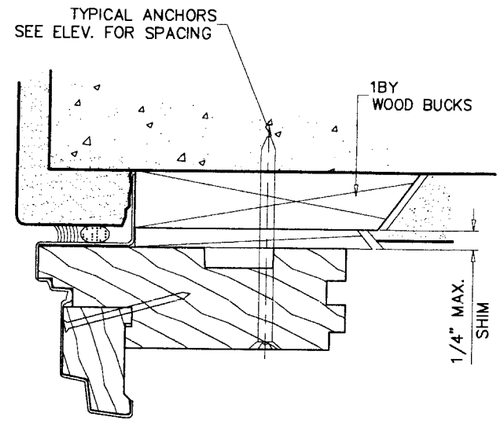

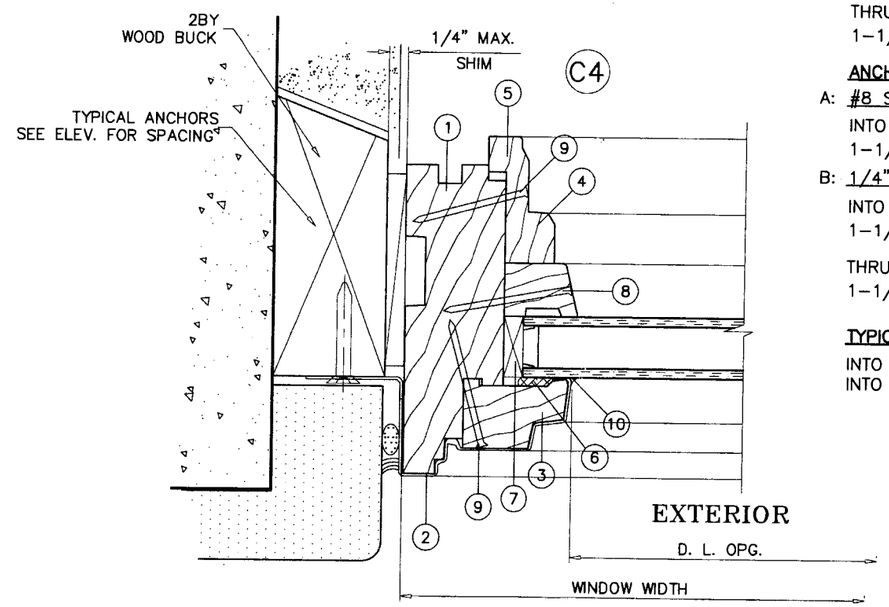

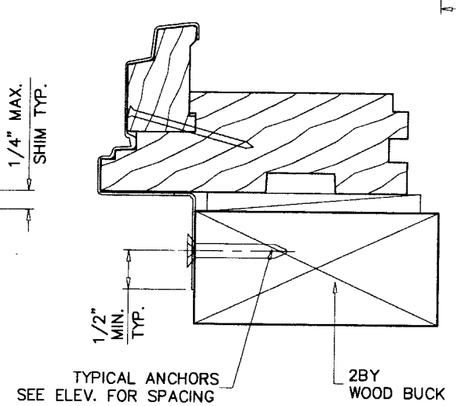

WOOD BUCKS NOT BY ANDERSEN, MUST SUSTAIN LOADS IMPOSED BY GLAZING SYSTEM AND TRANSFER THEM TO THE BUILDING STRUCTURE.

TYPICAL ANCHORS

ANCHORS THRU INSTALLATION FLANGE

ROOFING NAILS, 11GA. X 1-3/4" LONG

INTO 2BY WOOD BUCKS OR WOOD STRUCTURE

#8 SMS

INTO 2BY WOOD BUCKS OR WOOD STRUCTURE
1-1/2" MIN. PENETRATION INTO WOOD

ANCHORS THRU WINDOW FRAME

#12 SMS

INTO 2BY WOOD BUCKS OR WOOD STRUCTURE
1-1/2" MIN. PENETRATION INTO WOOD

1/4" DIA. TAPCONS

INTO 2BY WOOD BUCKS OR WOOD STRUCTURE
1-1/2" MIN. PENETRATION INTO WOOD

THRU WOOD BUCKS INTO MASONRY OR DIRECTLY INTO MASONRY
1-1/4" MIN. EMBED INTO CONC. OR MASONRY

ANCHORS THRU INSTALLATION CLIPS

A: #8 SMS

INTO 2BY WOOD BUCKS OR WOOD STRUCTURE
1-1/2" MIN. PENETRATION INTO WOOD

B: 1/4" DIA. TAPCONS

INTO 2BY WOOD BUCKS OR WOOD STRUCTURE
1-1/2" MIN. PENETRATION INTO WOOD

THRU WOOD BUCKS INTO MASONRY OR DIRECTLY INTO MASONRY
1-1/4" MIN. EMBED INTO CONC. OR MASONRY

TYPICAL EDGE DISTANCE

INTO CONCRETE AND MASONRY = 1-1/2" MIN.
INTO WOOD STRUCTURE = 3/4" MIN.

WINDOW DESCRIPTION
CTR1510
CTR1810
CTR2010
CTR2410
CTR2810
CTR3010
CTR2910
CTR3410
CTR4010
CTR4810
CTR5210
CTR51110
CTR6010

WINDOW DESCRIPTION
PTR3010
PTR3510
PTR4010
PTR4510
PTR5010
PTR5510
PTR6010
P3030
P3530
P4030
P4530
P5030
P5530
P6030
P3035
P3535
P4035
P4535
P5035
P5535
P6035
P3040
P3540
P4040
P4540
P5040
P5540
P6040
P3045
P3545
P4045
P4545
P5045
P5545
P6045
P3050
P3550
P4050
P4550
P5050
P5550
P6050
P3055
P3555
P4055
P4555
P5055
P3060
P3560
P4060
P4560
P5060

Engr: DR. HUMAYCUN FAROOQ
STRUCTURES
FLA. PE # 16557
C.A.N. 3538

PRODUCT REVISED
as complying with the Florida Buiding Code
Acceptance No 06-0711.07
Expiration Date 11/25/2009
By
Miami-Dade Product Control Division

AL-FAROOQ CORPORATION
ENGINEERS & PRODUCT DEVELOPMENT
1235 S.W. 87 AVE
MIAMI, FLORIDA 33174
TEL. (305) 264-8100 FAX. (305) 262-6978

COMP-ANL\W03-116AC

VINYL CLAD DIRECT SET FIXED WOOD WINDOWS

ANDERSEN CORPORATION
100 FOURTH AVE. NORTH
BAYPORT, MN. 55003-1096
TEL. (800) 426-7691 FAX (-)

revisions:

no	date	by	description
B	05.09.06		UPDTED FOR 2004 FBC
C	02.27.07		NO CHANGE THIS SHEET

date: 12-24-03
scale: 1/2" = 1"
dr. by: HAMID
chk. by:

drawing no.
W03-116

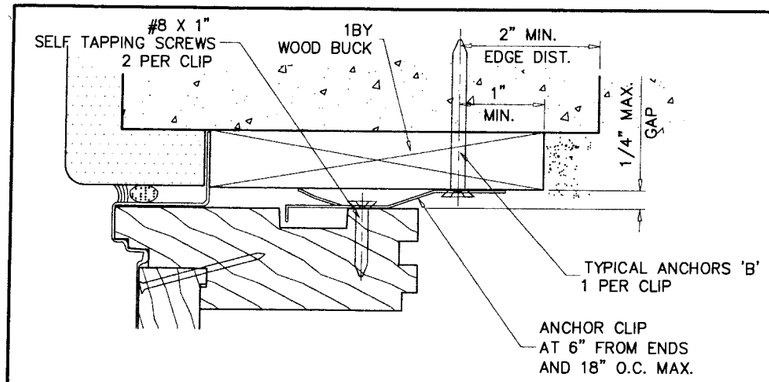

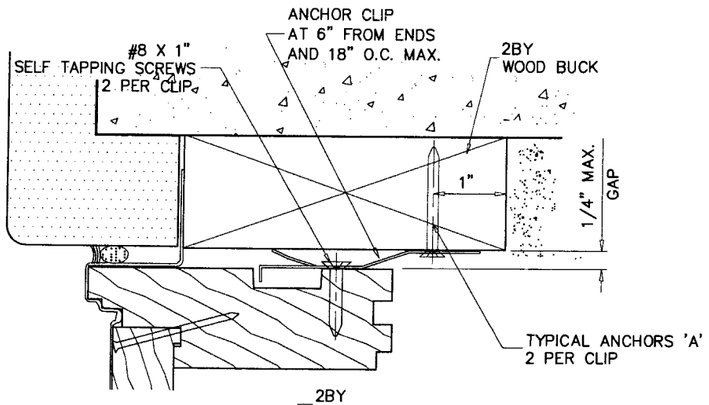

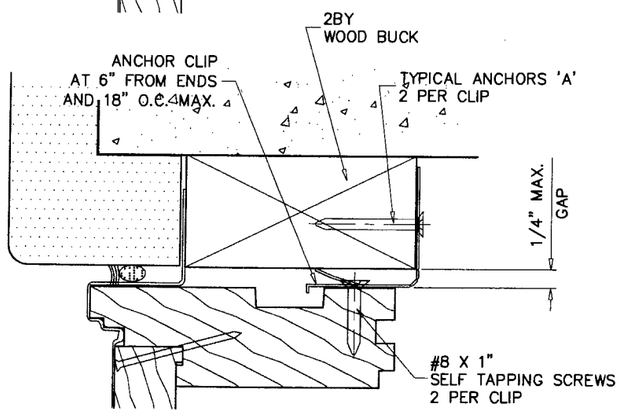

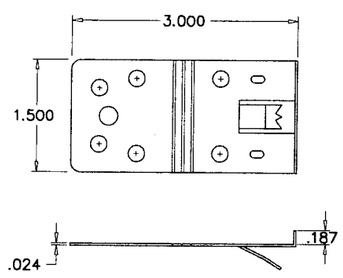

ANCHOR CLIP
304 ST. STEEL

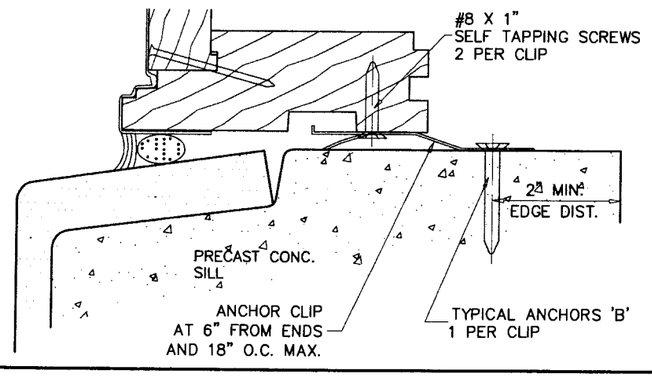

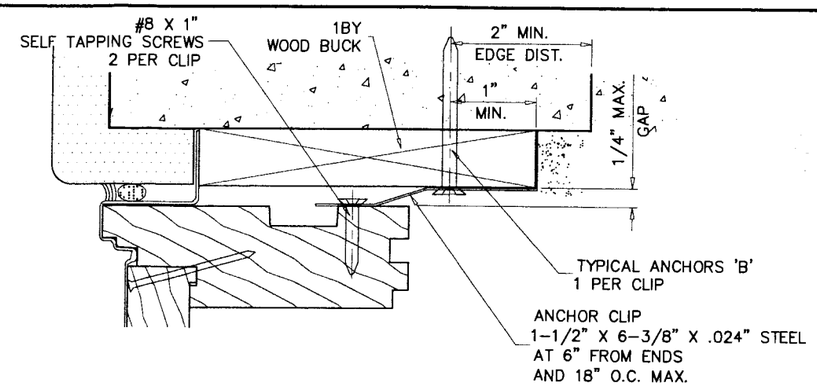

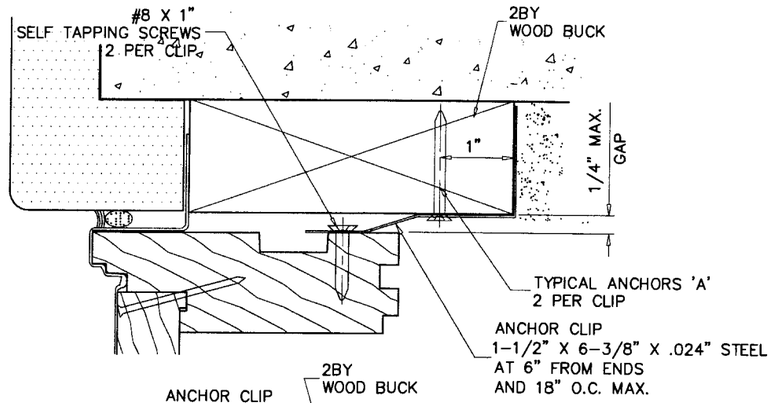

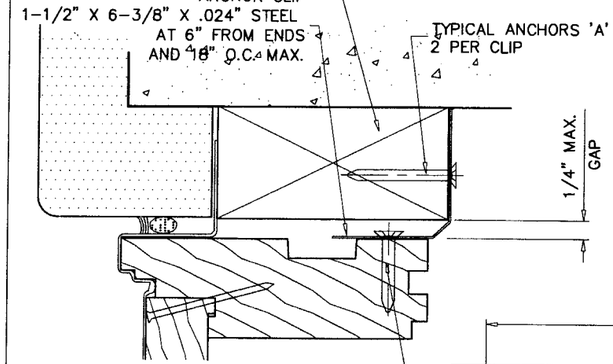

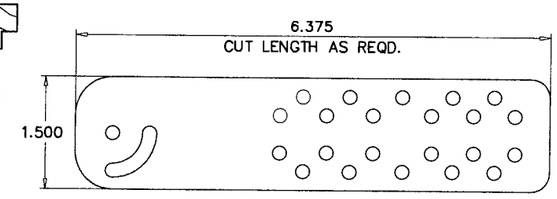

ANCHOR CLIP
304 ST. STEEL

WINDOW DESCRIPTION
CTR1510
CTR1810
CTR2010
CTR2410
CTR2810
CTR3010
CTR2910
CTR3410
CTR4010
CTR4810
CTR5210
CTR51110
CTR6010

WINDOW DESCRIPTION
PTR3010
PTR3510
PTR4010
PTR4510
PTR5010
PTR5510
PTR6010
P3030
P3530
P4030
P4530
P5030
P5530
P6030
P3035
P3535
P4035
P4535
P5035
P5535
P6035
P3040
P3540
P4040
P4540
P5040
P5540
P6040
P3045
P3545
P4045
P4545
P5045
P5545
P6045
P3050
P3550
P4050
P4550
P5050
P5550
P6050
P3055
P3555
P4055
P4555
P5055
P3060
P3560
P4060
P4560
P5060

Engr: DR. HUMAYOUN FAROOQ
STRUCTURES
FLA. PE # 16557
C.A.N. 3538

REVISED
as complying with the Florida
Building Code
Acceptance No 06-0711.07
Expiration Date 01/25/2009
By
Miami-Dade Product Control
Division

CLIP INSTALLATION DETAILS

AL-FAROOQ CORPORATION
ENGINEERS & PRODUCT DEVELOPMENT
1235 S.W. 87 AVE
MIAMI, FLORIDA 33174
TEL. (305) 264-8100 FAX. (305) 262-6978
COMP-ANL\W03-116AC

VINYL CLAD DIRECT SET FIXED WOOD WINDOWS

ANDERSEN CORPORATION
100 FOURTH AVE. NORTH
BAYPORT, MN. 55003-1096
TEL. (800) 426-7691 FAX (-)

revisions:

no	date	by	description
B	05.09.06		UPDTED FOR 2004 FBC
C	02.27.07		NO CHANGE THIS SHEET

date: 12-24-03
scale: 1/2" = 1"
dr. by: HAMID
chk. by:

drawing no. W03-116

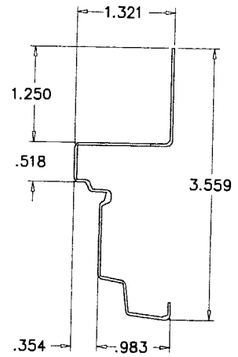

VINYL CLADDING
HEAD/JAMB/SILL

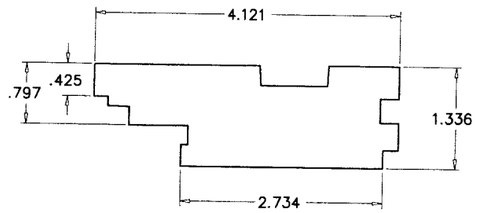

FRAME HEAD/JAMB/SILL

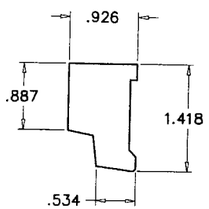

EXTERIOR GLASS STOP
(HEAD/JAMB/SILL)

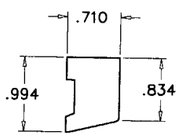

INTERIOR GLASS STOP
(HEAD/JAMB/SILL)

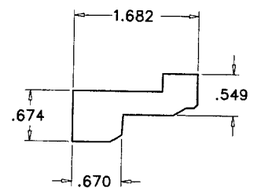

INTERIOR STOP
(HEAD/JAMB/SILL)

ITEM #	PART NO.	REQD.	DESCRIPTION	MATERIAL	MANF./SUPPLIER/REMARKS
1	30394	AS REQD.	FRAME HEAD/JAMB/SILL	WOOD	ANDERSEN
2.	30377	AS REQD.	FRAME COVER (HEAD/JAMB/SILL)	VINYL	–
3	30395	AS REQD.	EXTERIOR GLASS STOP (HEAD/JAMB/SILL)	WOOD	ANDERSEN
4	30397	AS REQD.	INTERIOR GLASS STOP (HEAD/JAMB/SILL)	WOOD	ANDERSEN
5	30393	AS REQD.	INTERIOR STOP (HEAD/JAMB/SILL)	WOOD	ANDERSEN
6	–	AS REQD.	GLAZING COMPOUND	SILICONE	DOW OR GE
7	20065	AS REQD.	SETTING BLOCK SPACER	–	–
8	27255	–	GALVANIZED NAILS AT 7" O.C.	–	16 GA. X 1–3/4"
9	27255	–	GALVANIZED NAILS AT 7" O.C.	–	16 GA. X 1–1/2"
10	–	AS REQD.	FILLET BEAD	SILICONE	DOW

PROFILES COMPOSED OF YELLOW PINE, PONDEROSA PINE OR EQUAL.

WINDOW DESCRIPTION
PTR3010
PTR3510
PTR4010
PTR4510
PTR5010
PTR5510
PTR6010
P3030
P3530
P4030
P4530
P5030
P5530
P6030
P3035
P3535
P4035
P4535
P5035
P5535
P6035
P3040
P3540
P4040
P4540
P5040
P5540
P6040
P3045
P3545
P4045
P4545
P5045
P5545
P6045
P3050
P3550
P4050
P4550
P5050
P5550
P6050
P3055
P3555
P4055
P4555
P5055
P3060
P3560
P4060
P4560
P5060

WINDOW DESCRIPTION
CTR1510
CTR1810
CTR2010
CTR2410
CTR2810
CTR3010
CTR2910
CTR3410
CTR4010
CTR4810
CTR5210
CTR51110
CTR6010

Engr: DR. HUMAYOUN FAROOQ
STRUCTURES
FLA. PE # 16557
C.A.N. 3538

PRODUCT REVISED
as complying with the Florida Building Code
Acceptance No 06-0711.07
Expiration Date 11/05/2009
By
Miami Dade Product Control Division

AL-FAROOQ CORPORATION
ENGINEERS & PRODUCT DEVELOPMENT
1235 S.W. 87 AVE
MIAMI, FLORIDA 33174
TEL. (305) 264-8100 FAX. (305) 262-6978

COMP–ANL\W03–116AC

VINYL CLAD DIRECT SET FIXED WOOD WINDOWS

ANDERSEN CORPORATION
100 FOURTH AVE. NORTH
BAYPORT, MN. 55003–1096
TEL. (800) 426–7691 FAX (–)

revisions:

no	date	by	description
B	05.09.06		UPDTED FOR 2004 FBC
C	02.27.07		NO CHANGE THIS SHEET

date: 12–24–03
scale: 1/2" = 1"
dr. by: HAMID
chk. by:

drawing no.
W03–116