NON-HVHZ

MIAMI-DADE COUNTY, FLORIDA
METRO-DADE FLAGLER BUILDING

BUILDING CODE COMPLIANCE OFFICE (BCCO)
PRODUCT CONTROL DIVISION

140 WEST FLAGLER STREET, SUITE 1603
MIAMI, FLORIDA 33130-1563
(305) 375-2901 FAX (305) 375-2908
www.buildingcodeonline.com

NOTICE OF ACCEPTANCE (NOA)

Entegra Sales, Inc.
819 N. Federal Highway, Suite 300
Stuart, FL. 34994

SCOPE:
This NOA is being issued under the applicable rules and regulations governing the use of construction materials. The documentation submitted has been reviewed by Miami-Dade County Product Control Division and accepted by the Board of Rules and Appeals (BORA) to be used in **NON-High Velocity Hurricane Zone (NON-HVHZ)** areas where allowed by the Authority Having Jurisdiction (AHJ).

This NOA shall not be valid after the expiration date stated below. The Miami-Dade County Product Control Division (In Miami Dade County) and/or the AHJ (in areas other than Miami Dade County) reserve the right to have this product or material tested for quality assurance purposes. If this product or material fails to perform in the accepted manner, the manufacturer will incur the expense of such testing and the AHJ may immediately revoke, modify, or suspend the use of such product or material within their jurisdiction. BORA reserves the right to revoke this acceptance, if it is determined by Miami-Dade County Product Control Division that this product or material fails to meet the requirements of the applicable building code.

This product is approved as described herein, and has been designed to comply with the **NON-High Velocity Hurricane Zone (NON-HVHZ)** of the Florida Building Code.

DESCRIPTION: Valencia Spanish "S" Concrete Roof Tile

LABELING: Each unit shall bear a permanent label with the manufacturer's name or logo, city, state and following statement: " **NON-HVHZ** Miami-Dade County Product Control Approved", unless otherwise noted herein.

RENEWAL of this NOA shall be considered after a renewal application has been filed and there has been no change in the applicable building code negatively affecting the performance of this product.

TERMINATION of this NOA will occur after the expiration date or if there has been a revision or change in the materials, use, and/or manufacture of the product or process. Misuse of this NOA as an endorsement of any product, for sales, advertising or any other purposes shall automatically terminate this NOA. Failure to comply with any section of this NOA shall be cause for termination and removal of NOA.

ADVERTISEMENT: The NOA number preceded by the words **NON-HVHZ**, and followed by the expiration date may be displayed in advertising literature. If any portion of the NOA is displayed, then it shall be done in its entirety.

INSPECTION: A copy of this entire NOA shall be provided to the user by the manufacturer or its distributors and shall be available for inspection at the job site at the request of the Building Official.

This NOA consists of pages 1 through 4.
The submitted documentation was reviewed by Alex Tigera.

ROOFING ASSEMBLY APPROVAL

Category: Roofing
Sub Category: Roofing Tiles
Material: Concrete

1. SCOPE

This revises a roofing system using Entegra Valencia Spanish "S" Concrete Roof Tile, as manufactured Entegra Roof Tile Corporation described in Section 2 of this Notice of Acceptance, designed to comply with the **NON-High Velocity Hurricane Zone** Florida Building Code.

2. PRODUCT DESCRIPTION

Manufactured by Applicant	Dimensions	Test Specifications	Product Description
Valencia Spanish "S"	l = 18" w = 10 ¼" min. ¾" thick	ASTM C 1492	High profile, interlocking, one-piece, "S" shaped, concrete roof tile equipped with two nail holes. For direct deck nail-on, mortar set or adhesive set applications.
Trim Pieces	l = varies w = varies varying thickness	ASTM C 1492	Accessory trim, concrete roof pieces for use at hips, rakes, ridges and valley terminations. Manufactured for each tile profile.

2.1 EVIDENCE SUBMITTED

Test Agency	Test Identifier	Test Name/Report	Date
PRI Construction Materials, Technologies	ESI-004-02-01	ASTM C 1492	11/06/06

3. LIMITATIONS

3.1 This evaluation report is not for use in the HVHZ.

3.2 Fire classification is not part of this acceptance. Refer to FBC Section 1502.5 or current Approved Roofing Materials Directory for fire rating of this product.

3.3 Installation shall comply with manufacturer's current published instructions, but not less than the requirements of FBC Section 1507.3 and the FRSA/TRI 07320.

3.4 For mechanically attached tiles, attachment for wind load resistance shall be in accordance with FRSA/TRI 07320, 4th edition.

3.5 For mortar-set or adhesive-set tiles, attachment for wind load resistance shall be in accordance with FBC Section 1609.7.3 and the mortar or adhesive manufacturer's Product Approval.

3.6 All products in the roof assembly shall have quality assurance audit in accordance with the Florida Building Code and F.A.C. Rule 9B-72.

4. INSTALLATION

4.1 Entegra Valencia Spanish "S" Concrete Roof Tile and its components shall be installed in strict compliance with FRSA/TRI 07320

5. LABELING

All tiles shall be labeled as per the standard conditions herein.

6. BUILDING PERMIT REQUIREMENTS

6.1 Application for building permit shall be accompanied by copies of the following:

6.1.1 This Notice of Acceptance.

6.1.2 Any other documents required by the Building Official or applicable Building Code in order to properly evaluate the installation of this system.

PROFILE DRAWING

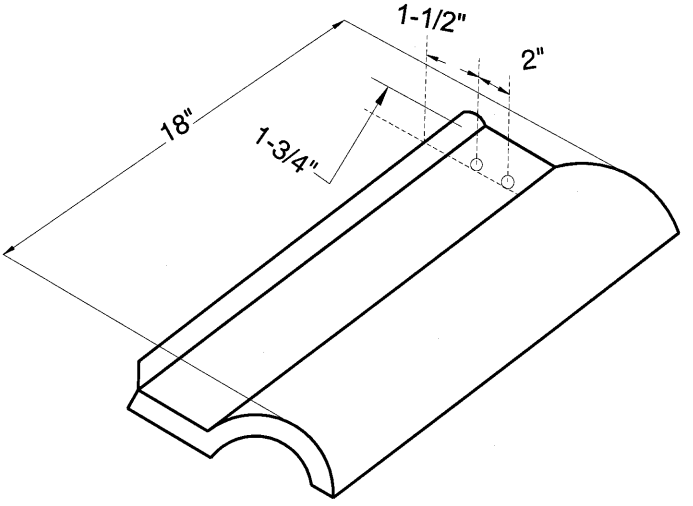

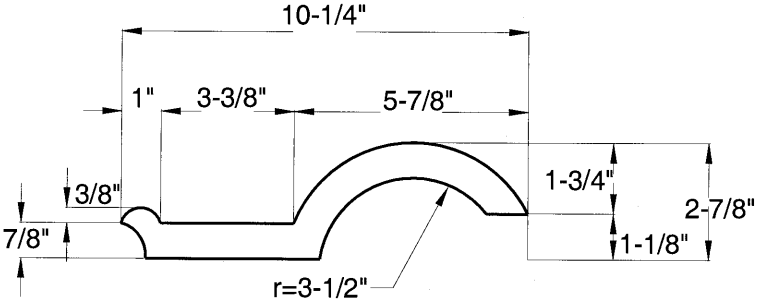

ENTEGRA VALENCIA SPANISH "S" CONCRETE ROOF TILE

END OF THIS ACCEPTANCE