MIAMI-DADE COUNTY

BUILDING CODE COMPLIANCE OFFICE (BCCO)
PRODUCT CONTROL DIVISION

MIAMI-DADE COUNTY, FLORIDA
METRO-DADE FLAGLER BUILDING
140 WEST FLAGLER STREET, SUITE 1603
MIAMI, FLORIDA 33130-1563
(305) 375-2901 FAX (305) 375-2908
www.miamidade.gov

NOTICE OF ACCEPTANCE (NOA)

KAWNEER COMPANY, INC
555 GUTHRIDGE COURT.
NORCROSS, GA 30092

SCOPE:

This NOA is being issued under the applicable rules and regulations governing the use of construction materials. The documentation submitted has been reviewed by Miami-Dade County Product Control Division and accepted by the Board of Rules and Appeals (BORA) to be used in Miami - Dade County and other areas where allowed by the Authority Having Jurisdiction (AHJ).

This NOA shall not be valid after the expiration date stated below. The Miami-Dade County Product Control Division (In Miami Dade County) and/or the AHJ (in areas other than Miami Dade County) reserve the right to have this product or material tested for quality assurance purposes. If this product or material fails to perform in the accepted manner, the manufacturer will incur the expense of such testing and the AHJ may immediately revoke, modify, or suspend the use of such product or material within their jurisdiction. BORA reserves the right to revoke this acceptance, if it is determined by Miami-Dade County Product Control Division that this product or material fails to meet the requirements of the applicable building code.

This product is approved as described herein, and has been designed to comply with the Florida Building Code, including the High Velocity Hurricane Zone.

DESCRIPTION: Series "2000T Terrace" Glazed Inswing Aluminum Door - L.M.I.

APPROVAL DOCUMENT: Drawing No.**06-KAW-0002**, titled Series "2000 T Inswing Terrace Door Large Missile Impact", sheets 1 through 13 of 13, dated 07/17/06, prepared by Engineering Express, signed and sealed by Frank L. Bernardo, P.E., bearing the Miami-Dade County Product Control Approval stamp with the Notice of Acceptance number and approval date by the Miami-Dade County Product Control Division.

MISSILE IMPACT RATING: Large and Small Missile Impact

LABELING: Each unit shall bear a permanent label with the manufacturer's name or logo, city, state and following statement: "Miami-Dade County Product Control Approved", unless otherwise noted herein.

RENEWAL of this NOA shall be considered after a renewal application has been filed and there has been no change in the applicable building code negatively affecting the performance of this product.

TERMINATION of this NOA will occur after the expiration date or if there has been a revision or change in the materials, use, and/or manufacture of the product or process. Misuse of this NOA as an endorsement of any product, for sales, advertising or any other purposes shall automatically terminate this NOA. Failure to comply with any section of this NOA shall be cause for termination and removal of NOA.

ADVERTISEMENT: The NOA number preceded by the words Miami-Dade County, Florida, and followed by the expiration date may be displayed in advertising literature. If any portion of the NOA is displayed, then it shall be done in its entirety.

INSPECTION: A copy of this entire NOA shall be provided to the user by the manufacturer or its distributors and shall be available for inspection at the job site at the request of the Building Official.

This NOA consists of this page 1 and evidence page E-1, as well as approval document mentioned above.

The submitted documentation was reviewed by **Jaime D. Gascon, P.E.**

PRODUCT CONTROL ACCEPTED

J. Gascon
4/5/07

Kawneer Company, Inc.

NOTICE OF ACCEPTANCE: EVIDENCE SUBMITTED

A. DRAWINGS

1. Manufacturer's die drawings and sections.
2. Drawing No **06-KAW-0002**, Sheets 1 through 13 of 13, titled "**2000T Inswing Terrace Door Large Missile Impact**", prepared by **Engineering Express**, dated **07/17/06**, signed and sealed by **Frank L. Bernardo**, P.E.

B. TESTS

1. Test reports on 1) Air Infiltration Test, per FBC, TAS 202-94
   2) Uniform Static Air Pressure Test, Loading per FBC TAS 202-94
   3) Water Resistance Test, per FBC, TAS 202-94
   4) Large Missile Impact Test per FBC, TAS 201-94
   5) Cyclic Wind Pressure Loading per FBC, TAS 203-94
   6) Forced Entry Test, per FBC 2411 3.2.1, TAS 202-94

   Along with installation diagram of an outswing aluminum storefront, prepared by Hurricane Test Laboratory, Inc., Test Report No. **HTL G049-0905-04** dated 10/16-26/04, signed and sealed by Vinu J. Abraham, P.E.

C. CALCULATIONS

1. Anchor Calculations and structural analysis, complying with FBC-2004, prepared by Engineering Express, dated 03/15/07, signed and sealed by Frank L. Bennardo, P.E. **Complies with ASTM E1300-98/02**

D. QUALITY ASSURANCE

1. Miami Dade Building Code Compliance Office (BCCO).

E. MATERIAL CERTIFICATIONS

1. Notice of Acceptance No. **06-0216.06** issued to Solutia Inc. for "**Saflex IIIG Clear or Colored Interlayer**" dated 05/04/06, expiring on 05/21/11.
2. Notice of Acceptance No. **02-0916.04** issued to Virakon Inc. for "**Laminate with Plyvinyl Brutryal Interlayer**" dated 05/22/03, expiring on 04/14/08.
3. Notice of Acceptance No. **03-0415.13** issued to Solutia Inc. for "**Vanceva Composites used for lamination of glass**" dated 12/11/03, expiring on 12/11/08.
4. Notice of Acceptance No. **05-1208.02** issued to E.I. DuPont DeNemours for "**Dupont Butacite PVB Interlayer**" dated 01/05/06, expiring on 12/11/10

F. STATEMENTS

1. Statement letter of code compliance and no financial interest, dated 01/12/06, signed and sealed by Dawn N. Stuart, P.E.

G. OTHER

1. None

Jaime D. Gascón, P.E.
Chief, Product Control Division
NOA No 06-0803.01
Expiration Date: April 26, 2012
Approval Date: April 26, 2007

NOTES

1. THE ALUMINUM TERRACE DOOR SYSTEM DESCRIBED HEREIN HAS BEEN DESIGNED AND TESTED IN COMPLIANCE WITH THE FLORIDA BUILDING CODE 2004, HIGH VELOCITY HURRICANE ZONES, MIAMI-DADE COUNTY PROTOCOLS TAS 201, 202 & 203, AND ASTM E 1300-02.

2. NO 33-1/3% INCREASE IN ALLOWABLE STRESS HAS BEEN USED IN THE DESIGN OF THIS SYSTEM. WIND LOAD DURATION FACTOR Cd=1.6 HAS BEEN USED FOR WOOD ANCHOR DESIGN.

3. POSITIVE AND NEGATIVE DESIGN PRESSURES CALCULATED FOR USE WITH THIS SYSTEM SHALL BE DETERMINED BY OTHERS ON A JOB-SPECIFIC BASIS IN ACCORDANCE WITH THE GOVERNING CODE.

4. ALL SYSTEM DETAILS CONTAINED HEREIN ARE GENERIC AND DO NOT PROVIDE INFORMATION FOR A SPECIFIC SITE. FOR SITE CONDITIONS DIFFERENT FROM THE CONDITIONS DETAILED HEREIN, A LICENSED ENGINEER OR REGISTERED ARCHITECT SHALL PREPARE SITE SPECIFIC DOCUMENTS AND SUBMIT FOR ONE-TIME APPROVAL FOR USE IN CONJUNCTION WITH THIS DOCUMENT.

5. PERMIT HOLDER SHALL VERIFY THE ADEQUACY OF THE EXISTING STRUCTURE TO WITHSTAND SUPERIMPOSED LOADS. WOOD BUCKS (INSTALLED BY OTHERS) SHALL BE ANCHORED PROPERLY TO TRANSFER LOADS TO THE EXISTING STRUCTURE.

6. PANELS GLAZED WITH 9/16" LAMINATED GLASS ARE LARGE MISSILE IMPACT RESISTANT. NO PROTECTION REQUIRED FOR ALL INSTALLATIONS.

7. ALLOWABLE CONFIGURATIONS: SINGLE INSWING DOOR OR DOUBLE INSWING DOOR.

8. ALL STEEL IN CONTACT WITH ALUMINUM SHALL BE PAINTED OR PLATED PER APPLICABLE SECTION OF FBC 2004.

MIAMI-DADE COUNTY PRODUCT APPROVAL
KAWNEER 2000T TERRACE DOOR
INSWING DOOR, SINGLE OR PAIR
LARGE MISSILE IMPACT RESISTANT
9/16" H.S. LAMINATED GLASS (FOR GLASS TYPES, REFER TO GLAZING SCHEDULE ON THIS SHEET)

DESIGN PRESSURE = +100 / -100 PSF
(GLASS TYPES 1, 2 OR 3)

DESIGN PRESSURE = +65 / -65 PSF
(GLASS TYPES 4 OR 5)

GLAZING SCHEDULE

TYPE	NOMINAL THICKNESS	TYPICAL THICKNESS	DESCRIPTION
1	9/16"	.506"	1/4" HS OUTBOARD / 0.075" SOLUTIA VANCEVA® PVB / 1/4" HS INBOARD
2	9/16"	.506"	1/4" HS OUTBOARD / 0.100" VIRACON-STORMGUARD® / 1/4" HS INBOARD
3	9/16"	.506"	1/4" HS OUTBOARD / 0.100" DUPONT SGP INTERLAYER / 1/4" HS INBOARD
4	9/16"	.506"	1/4" HS OUTBOARD / 0.090" SOLUTIA SAFLEX® PVB / 1/4" HS INBOARD
5	9/16"	.506"	1/4" HS OUTBOARD / 0.090" DUPONT BUTACITE PVB / 1/4" HS INBOARD

Approved as complying with the Florida Buiding Code
Date 04/26/2007
NOA# 06-0803.01
Miami Dade Product Control Division
By

FRANK L. BENNARDO, P.E.
PE0046549

03/15/2007

ENGINEERING EXPRESS®
160 SW 12th AVENUE, #106
DEERFIELD BEACH, FL 33442
PH: (954) 354-0660 FAX: (954) 354-0443
WWW.ENGEXP.COM
CERT OF AUTH: #9885
A FRANK L. BENNARDO, P.E., INC. INNOVATION

Kawneer
An Alcoa Company
555 GUTHRIDGE COURT
NORCROSS, GEORGIA 30092
PHONE (770) 449-5555
FAX (770) 734-1560
Product Engineering & Development

2000T INSWING TERRACE DOOR
LARGE MISSILE IMPACT
SINGLE DOOR OR PAIR OF DOORS

REMARKS	DRWN	CHKD	DATE
INIT ISSUE	CL	FLB	7/17/06
REVISION	JEM	CL	03/09/07

06-KAW-0002
SCALE: - 01
PAGE DESCRIPTION:
-
-

13

1

F:\01 Project Files\Kawneer (KAW)\2006 Jobs\06-KAW-0002 2000T Terrace Door (NOA) Large Missile, Inswing\06-KAW-0002_00c 2000T Terrace Door (NOA) Large Missile, Inswing.dwg
03/15/2007 - 1:02pm joem

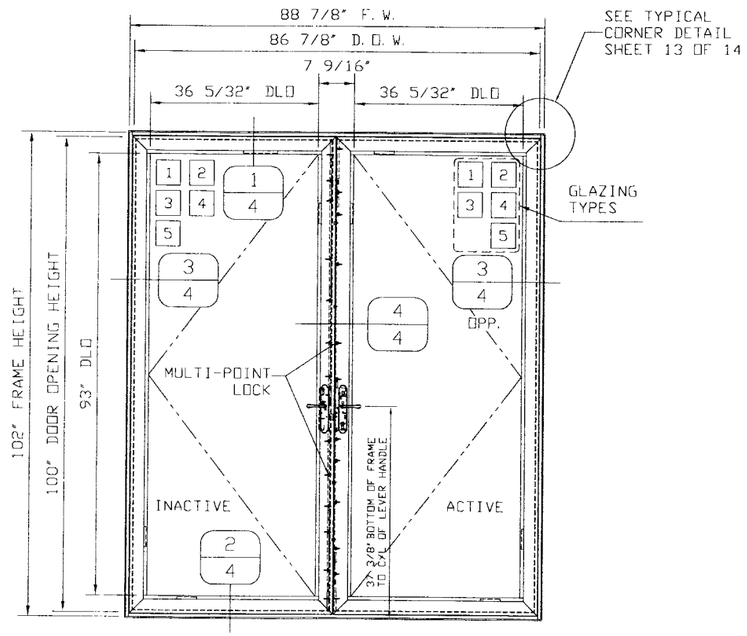

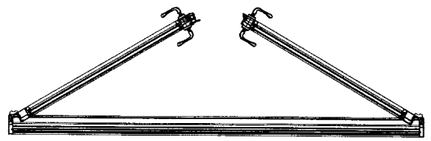

DOUBLE INSWING DOOR

ELEVATION

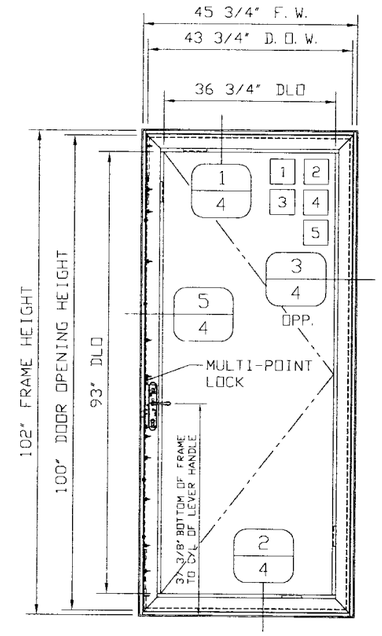

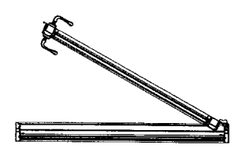

SINGLE INSWING DOOR

ELEVATION

Approved as complying with the Florida Building Code
Date 04/26/2007
NOA# 06-0803.01
Miami Dade Product Control Division
By

FRANK L. BENNARDO, P.E.
PE0046549
03/15/2007

ENGINEERING EXPRESS®
160 SW 12th AVENUE, #106
DEERFIELD BEACH, FL 33442
Ph: (954) 354-0660 Fax: (954) 354-0443
WWW.ENGEXP.COM
CERT OF AUTH #9885
A FRANK L. BENNARDO, P.E., INC. INNOVATION

Kawneer
An Alcoa Company
555 GUTHRIDGE COURT
NORCROSS, GEORGIA 30092
PHONE (770) 449-5555
FAX (770) 734-1560
Product Engineering & Development

2000T INSWING TERRACE DOOR
LARGE MISSILE IMPACT
SINGLE DOOR OR PAIR OF DOORS

REMARKS	DRWN	CHKD	DATE
INIT ISSUE	CL	FLB	7/17/06
REVISION	JEM	CL	03/09/07

06-KAW-0002

SCALE: - 01

PAGE DESCRIPTION:
-
-

13

2

03/15/2007 - 1:02pm joem F:\01 Project Files\Kawneer (KAW)\2006 Jobs\06-KAW-0002 2000T Terrace Door (NOA) Large Missile, Inswing\06-KAW-0002_00c 2000T Terrace Door (NOA) Large Missile, Inswing.dwg

INSWING DOOR SECTIONS

* SEE THERMAL BREAK DETAIL ON SHEET 13 OF 14
** 6" FROM EACH END AND 16" O.C. MAX.
*** 3" FROM EACH END AND 18" O.C. MAX.
**** 12" LONG AT BOTTOM OF EACH VERTICAL RAIL

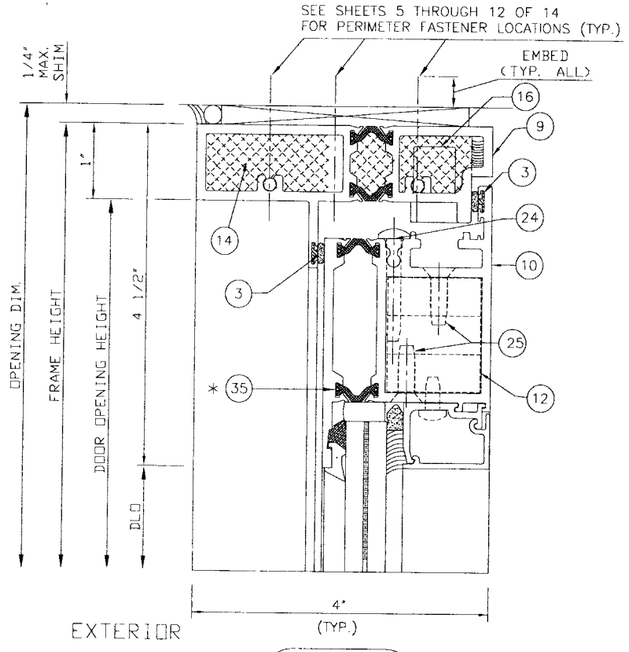

HEAD 1/4

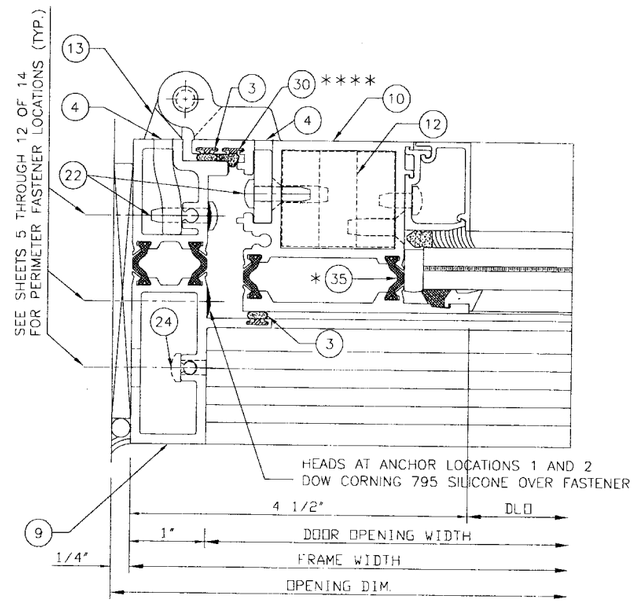

EXTERIOR HINGE JAMB 3/4

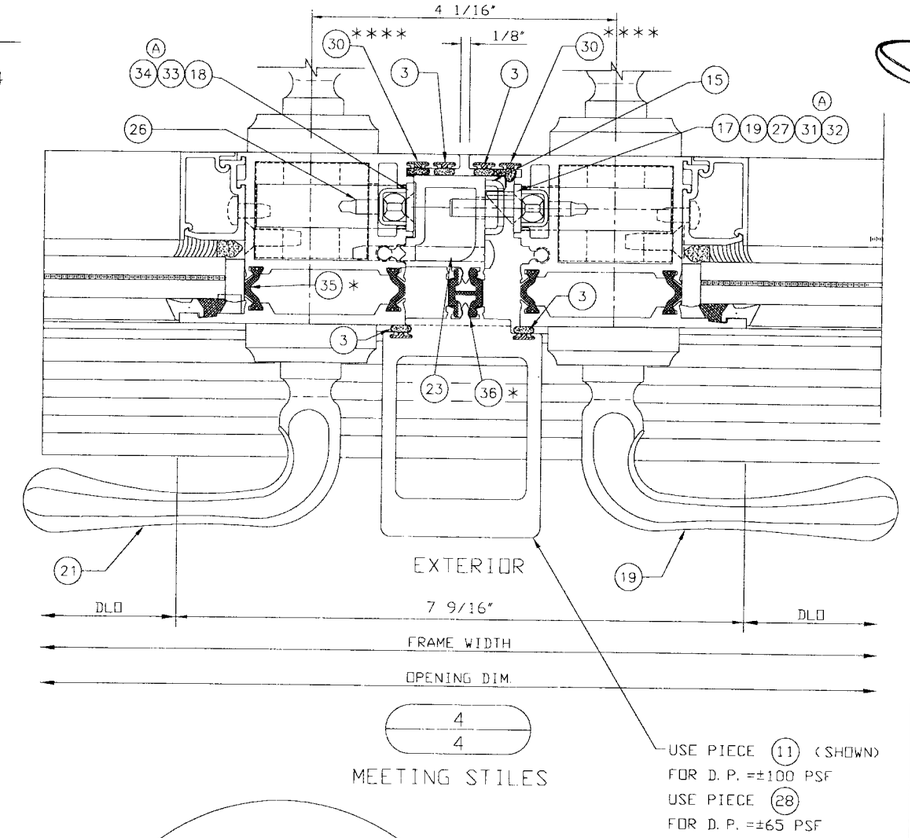

MEETING STILES 4/4

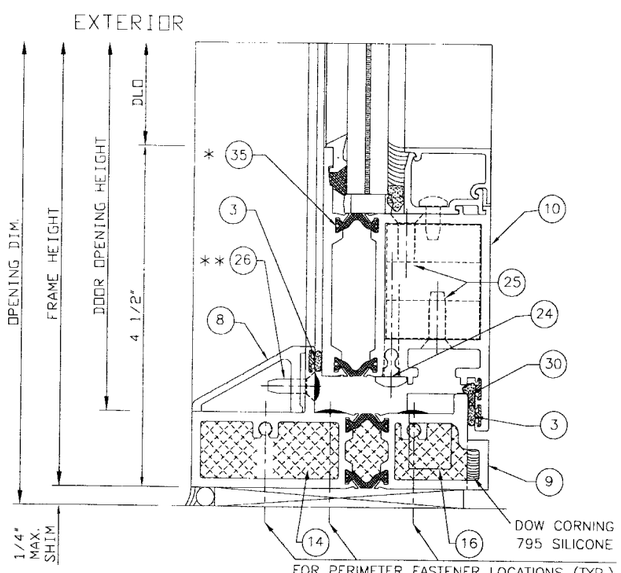

SILL 2/4

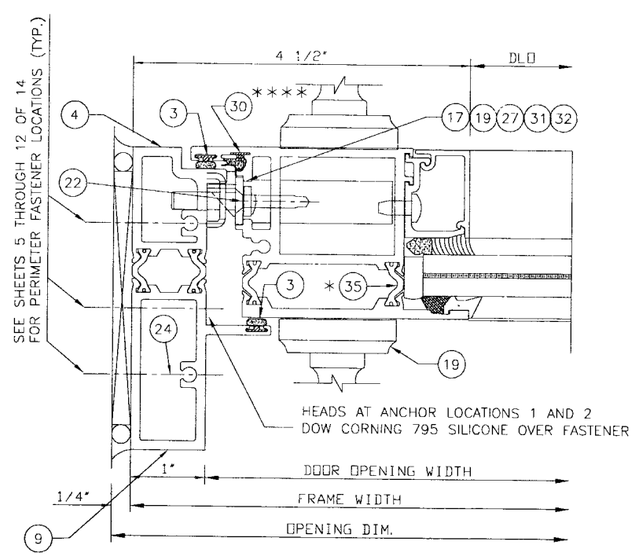

EXTERIOR LOCK JAMB 5/4

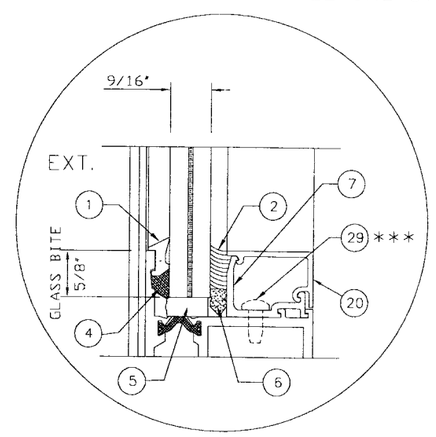

TYP. GLAZING DETAIL
9/16" LAMINATED H. S. GLASS
TYPES 1, 2, 3, 4 OR 5

Approved as complying with the Florida Building Code
Date 04/26/2007
NOA# 06-0803.01
Miami Dade Product Control Division
By

FRANK L. BENNARDO, P.E.
PE0046549
03/15/2007

ENGINEERING EXPRESS®
160 SW 12th AVENUE, #106
DEERFIELD BEACH, FL 33442
PH: (954) 354-0660 FAX: (954) 354-0443
WWW.ENGEXP.COM
CERT OF AUTH #9885
A FRANK L. BENNARDO, P.E., INC. INNOVATION

Kawneer
An Alcoa Company
555 GUTHRIDGE COURT
NORCROSS, GEORGIA 30092
PHONE (770) 449-5555
FAX (770) 734-1560
Product Engineering & Development

2000T INSWING TERRACE DOOR
LARGE MISSILE IMPACT
SINGLE DOOR OR PAIR OF DOORS

REMARKS	DRWN	CHKD	DATE
INIT ISSUE	CL	FLB	7/17/06
REVISION	JEM	CL	03/09/07

06-KAW-0002
SCALE: -
01
PAGE DESCRIPTION:
-
-
13
3

03/15/2007 - 1:02pm joem F:\01 Project Files\Kawneer (KAW)\2006 Jobs\06-KAW-0002 2000T Terrace Door (NOA) Large Missile, Inswing\06-KAW-0002_00c 2000T Terrace Door (NOA) Large Missile, Inswing.dwg

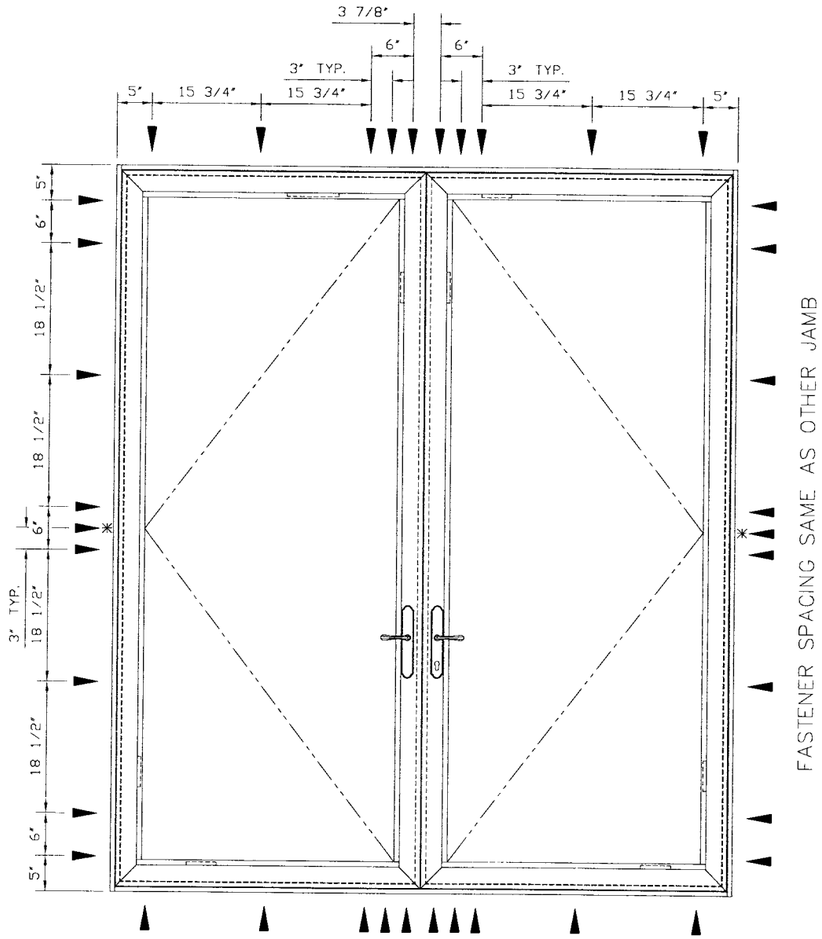

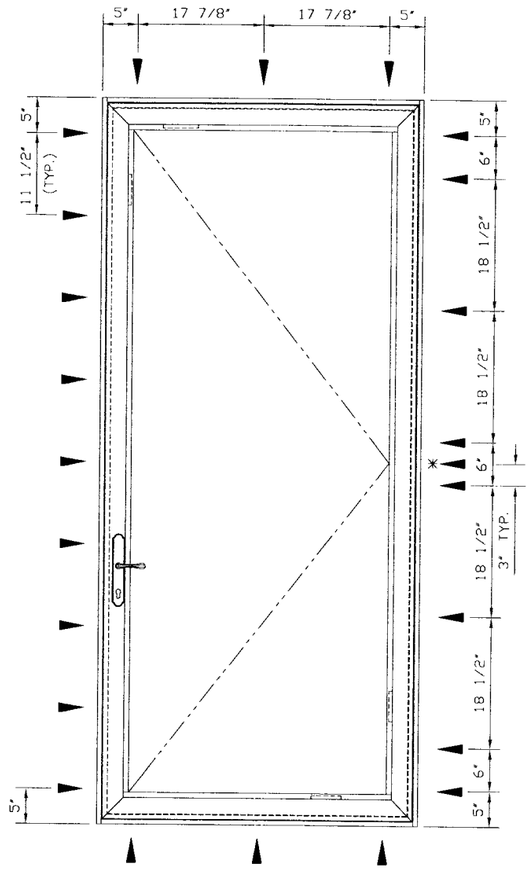

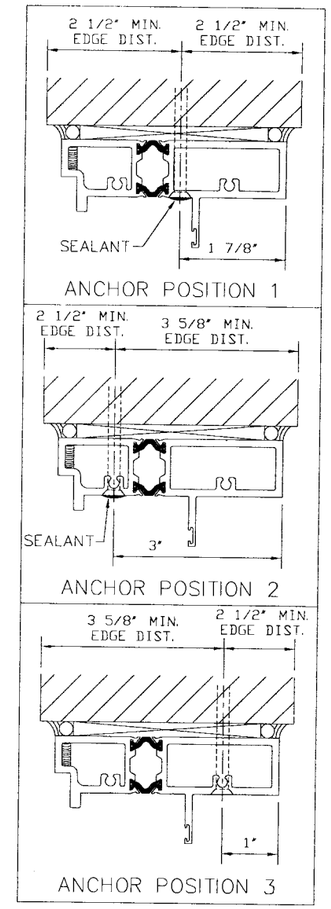

ANCHOR POSITIONS

REF FASTENER SCHEDULE BELOW

ANCHOR NOTES (CONC/BLOCK SUBSTRATE):

1. ANCHORS SHALL BE INSTALLED IN ACCORDANCE WITH MANUFACTURER'S RECOMMENDATIONS.
2. ANCHOR EMBEDMENT SHALL BE INTO BASE SUBSTRATE MATERIAL, EXCLUDING SHIM, BUCK, OR STUCCO OR OTHER WALL FINISH.
3. BASE SUBSTRATE MATERIAL SHALL BE CONCRETE BLOCK (ASTM C-90) OR CONCRETE (MIN 3320psi COMPRESSIVE STRENGTH).
4. SEE EXTERIOR ELEVATIONS ABOVE FOR ANCHOR LOCATIONS AND/OR SPACING.
5. ENSURE MINIMUM OF 2-1/2" EDGE DISTANCE FOR ALL ANCHORS INTO CONCRETE BLOCK OR CONCRETE.
6. ENSURE 1-1/4" MIN EMBEDMENT TO HOLLOW BLOCK OR 1-3/4" MIN EMBEDMENT TO CONCRETE.

PERIMETER FASTENER LOCATIONS

CONCRETE (3320psi MIN) OR HOLLOW BLOCK SUBSTRATES (C-90)

D.P.=±65 PSF

CONCRETE/BLOCK ANCHOR SCHEDULE

1/4" x 2-3/4" PHILLIPS TRIMFIT FLAT HEAD TAPCON (ELCO OR ITW)

▼ ANCHOR POSITIONS 1, 2, OR 3

* THESE PERIMETER FASTENERS TO GO THROUGH BUTT HINGE FOR ANCHOR POSITION 2

Approved as complying with the Florida Building Code
Date 04/26/2007
NOA# 06-0803.01
Miami Dade Product Control Division
By

FRANK L. BENNARDO, P.E.
PE0046549
03/15/2007

ENGINEERING EXPRESS®
160 SW 12th AVENUE, #106
DEERFIELD BEACH, FL 33442
Ph: (954) 354-0660 FAX: (954) 354-0443
WWW.ENGEXP.COM
CERT OF AUTH #9885
A. FRANK L. BENNARDO, P.E., INC. INNOVATION

Kawneer An Alcoa Company
555 GUTHRIDGE COURT
NORCROSS, GEORGIA 30092
PHONE (770) 449-5555
FAX (770) 734-1560
Product Engineering & Development

2000T INSWING TERRACE DOOR
LARGE MISSILE IMPACT
SINGLE DOOR OR PAIR OF DOORS

REMARKS	DRWN	CHKD	DATE
INIT ISSUE	CL	FLB	7/17/06
REVISION	JEM	CL	03/09/07

06-KAW-0002

SCALE: - 01

PAGE DESCRIPTION:

13

4

03/15/2007 - 1:02pm joem F:\01 Project Files\Kawneer (KAW)\2006 Jobs\06-KAW-0002 2000T Terrace Door (NOA) Large Missile, Inswing\06-KAW-0002_00c 2000T Terrace Door (NOA) Large Missile, Inswing.dwg

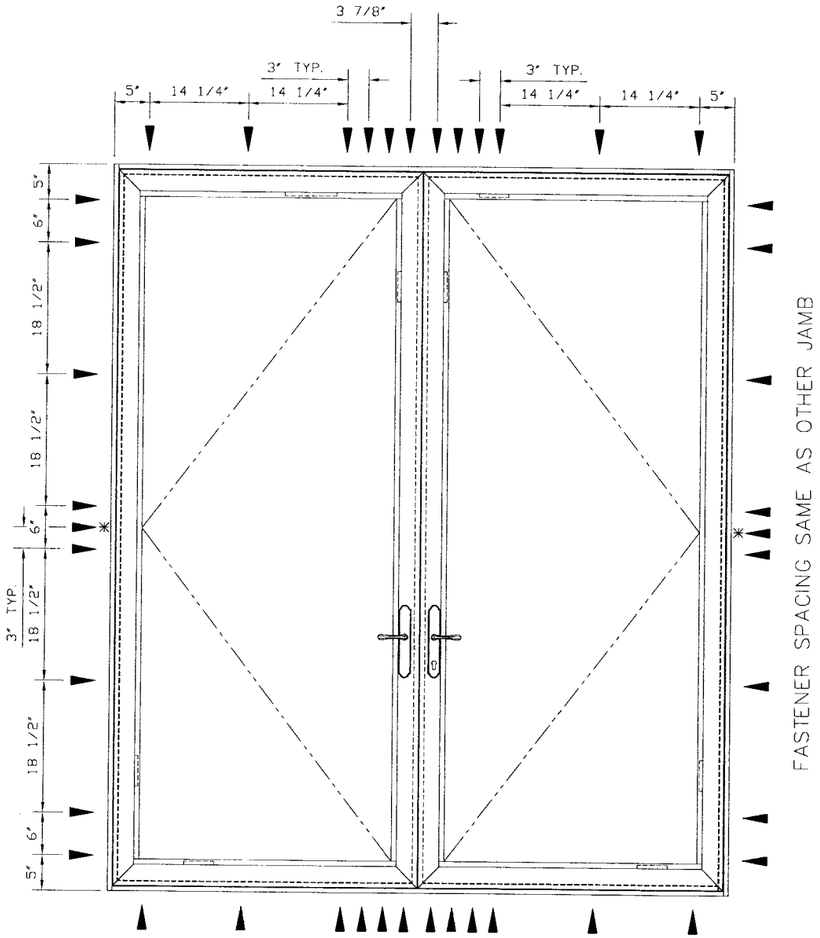

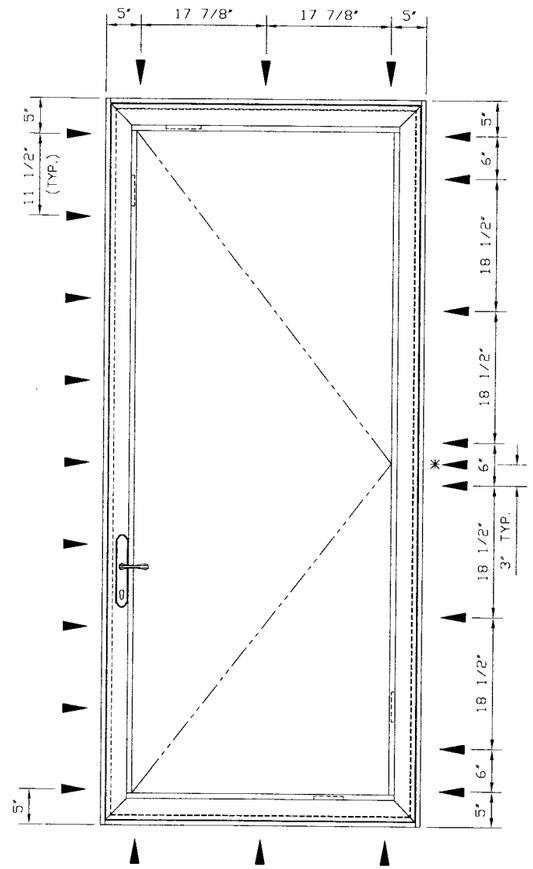

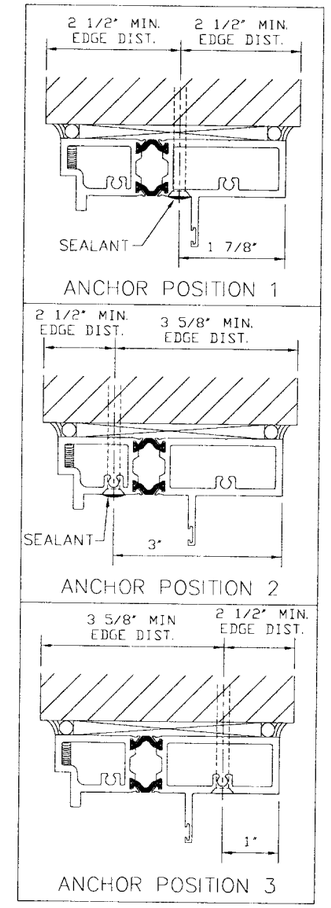

ANCHOR POSITIONS

REF FASTENER SCHEDULE BELOW

ANCHOR NOTES (CONC/BLOCK SUBSTRATE):

1. ANCHORS SHALL BE INSTALLED IN ACCORDANCE WITH MANUFACTURER'S RECOMMENDATIONS.
2. ANCHOR EMBEDMENT SHALL BE INTO BASE SUBSTRATE MATERIAL, EXCLUDING SHIM, BUCK, OR STUCCO OR OTHER WALL FINISH.
3. BASE SUBSTRATE MATERIAL SHALL BE CONCRETE BLOCK (ASTM C-90) OR CONCRETE (MIN 3320psi COMPRESSIVE STRENGTH).
4. SEE EXTERIOR ELEVATIONS ABOVE FOR ANCHOR LOCATIONS AND/OR SPACING.
5. ENSURE MINIMUM OF 2-1/2" EDGE DISTANCE FOR ALL ANCHORS INTO CONCRETE BLOCK OR CONCRETE.
6. ENSURE 1-1/4" MIN EMBEDMENT TO HOLLOW BLOCK OR 1-3/4" MIN EMBEDMENT TO CONCRETE.

PERIMETER FASTENER LOCATIONS

CONCRETE (3320psi MIN) OR HOLLOW BLOCK SUBSTRATES (C-90)

D.P.=±100 PSF

CONCRETE/BLOCK ANCHOR SCHEDULE

1/4" x 2-3/4" PHILLIPS TRIMFIT FLAT HEAD TAPCON (ELCO OR ITW)

▼ ANCHOR POSITIONS 1, 2, OR 3

* THESE PERIMETER FASTENERS TO GO THROUGH BUTT HINGE FOR ANCHOR POSITION 2

Approved as complying with the Florida Buiding Code
Date 04/26/2007
NOA# 06-0803.01
Miami Dade Product Control Division
By

FRANK L. BENNARDO, P.E.
PE0046549
03/15/2007

ENGINEERING EXPRESS®
160 SW 12th AVENUE, #106
DEERFIELD BEACH, FL 33442
PH: (954) 354-0660 FAX: (954) 354-0443
WWW.ENGEXP.COM
CERT OF AUTH #9985
A FRANK L. BENNARDO, P.E., INC. INNOVATION

Kawneer
An Alcoa Company
555 GUTHRIDGE COURT
NORCROSS, GEORGIA 30092
PHONE (770) 449-5555
FAX (770) 734-1560
Product Engineering & Development

2000T INSWING TERRACE DOOR
LARGE MISSILE IMPACT
SINGLE DOOR OR PAIR OF DOORS

REMARKS	DRWN	CHKD	DATE
INIT ISSUE	CL	FLB	7/17/06
REVISION	JEM	CL	03/09/07

06-KAW-0002

SCALE: - 01

PAGE DESCRIPTION:
-
-

13

5

F:\01 Project Files\Kawneer (KAW)\2006 Jobs\06-KAW-0002 2000T Terrace Door (NOA) Large Missile, Inswing.dwg
03/15/2007 - 1:03pm joem

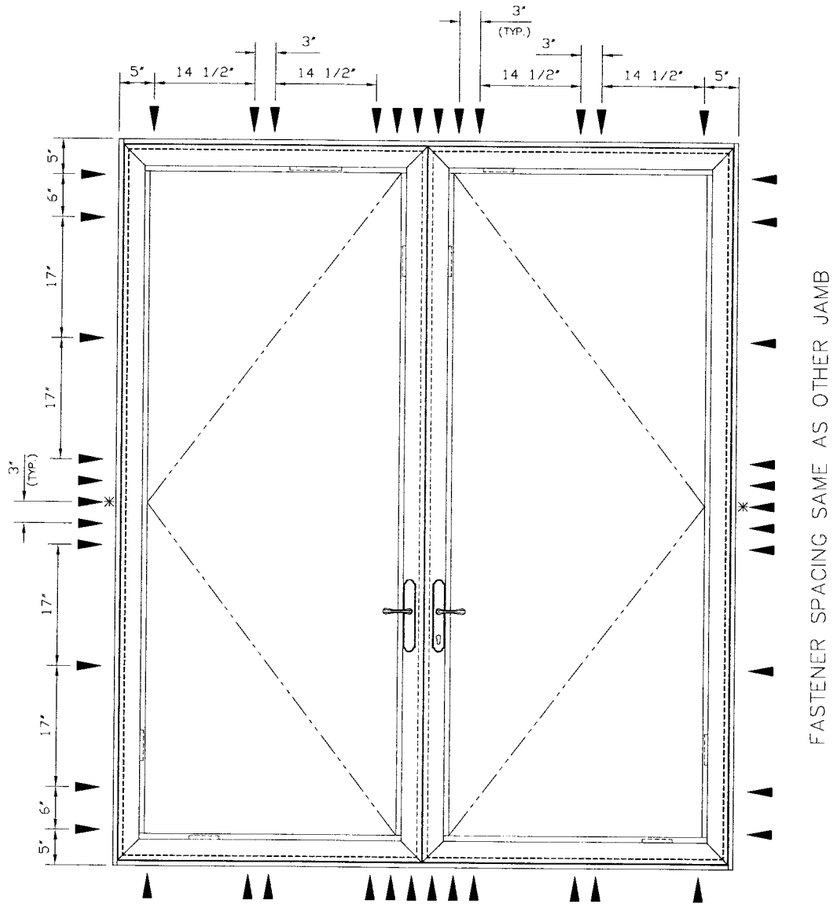

FASTENER SPACING SAME AS HEAD

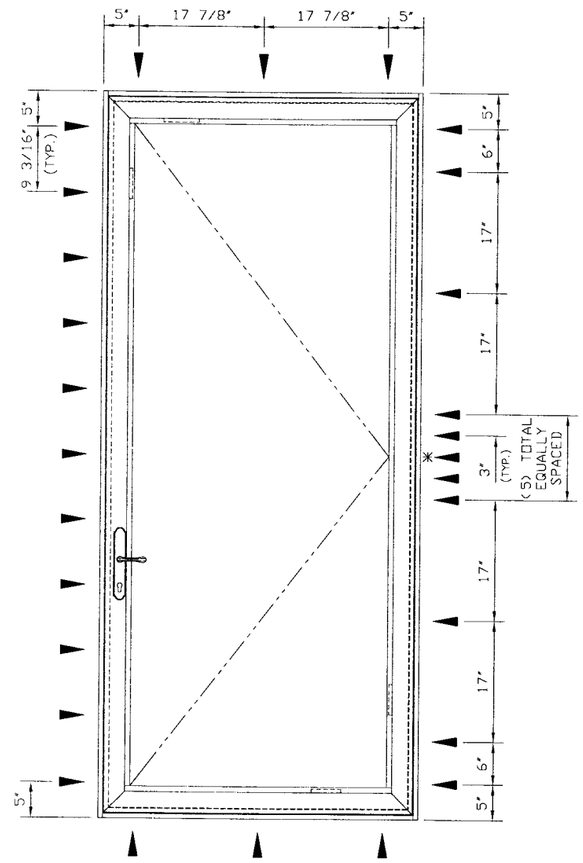

FASTENER SPACING SAME AS HEAD

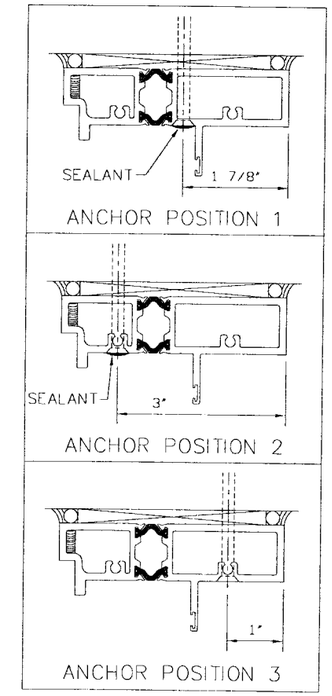

ANCHOR POSITIONS

REF FASTENER SCHEDULE BELOW

ANCHOR NOTES (WOOD SUBSTRATE):

1. ANCHORS SHALL BE INSTALLED IN ACCORDANCE WITH MANUFACTURER'S RECOMMENDATIONS.
2. ANCHOR EMBEDMENT SHALL BE INTO BASE SUBSTRATE MATERIAL, EXCLUDING SHIM, BUCK, OR STUCCO OR OTHER WALL FINISH.
3. BASE SUBSTRATE MATERIAL SHALL BE WOOD (SOUTHERN PINE W/ G=0.55 OR GREATER SPECIFIC GRAVITY).
4. SEE EXTERIOR ELEVATIONS ABOVE FOR ANCHOR LOCATIONS AND/OR SPACING.
5. ENSURE MINIMUM OF 1" EDGE DISTANCE FOR ALL WOOD ANCHORS.
6. ENSURE MINIMUM OF 1-1/2" EMBEDMENT FOR ALL WOOD ANCHORS.

PERIMETER FASTENER LOCATIONS

WOOD SUBSTRATE (SOUTHERN PINE, G=0.55)
D.P.=±65 PSF

WOOD ANCHOR SCHEDULE

#14-14 x 3" GRADE 5 FLAT HEAD WOOD SCREW OR THREAD FORMING SCREW (BY ELCO), OR 1/4" ELCO TAPCON (MIN Fy=92ksi)

▼ ANCHOR POSITIONS 1, 2, OR 3

* THESE PERIMETER FASTENERS TO GO THROUGH BUTT HINGE FOR ANCHOR POSITION 2

Approved as complying with the Florida Building Code
Date 04/26/2007
NOA# 06-0803.01
Miami Dade Product Control Division
By

FRANK L. BENNARDO, P.E.
PE0046549
03/15/2007

ENGINEERING EXPRESS®
160 SW 12th AVENUE, #106
DEERFIELD BEACH, FL 33442
Ph: (954) 354-0660 Fax: (954) 354-0443
WWW.ENGEXP.COM
CERT OF AUTH #9885
A FRANK L. BENNARDO, P.E., INC. INNOVATION

Kawneer
An Alcoa Company
Product Engineering & Development
555 GUTHRIDGE COURT
NORCROSS, GEORGIA 30092
PHONE (770) 449-5555
FAX (770) 734-1560

2000T INSWING TERRACE DOOR
LARGE MISSILE IMPACT
SINGLE DOOR OR PAIR OF DOORS

REMARKS	DRWN	CHKD	DATE
INIT.ISSUE	CL	FLB	7/17/06
REVISION	JEM	CL	03/09/07

06-KAW-0002
SCALE: - 01
PAGE DESCRIPTION:
-
-

13

6

F:\01 Project Files\Kawneer (KAW)\2006 Jobs\06-KAW-0002 2000T Terrace Door (NOA) Large Missile, Inswing\06-KAW-0002_00c 2000T Terrace Door (NOA) Large Missile, Inswing.dwg
03/15/2007 - 1:03pm jcem

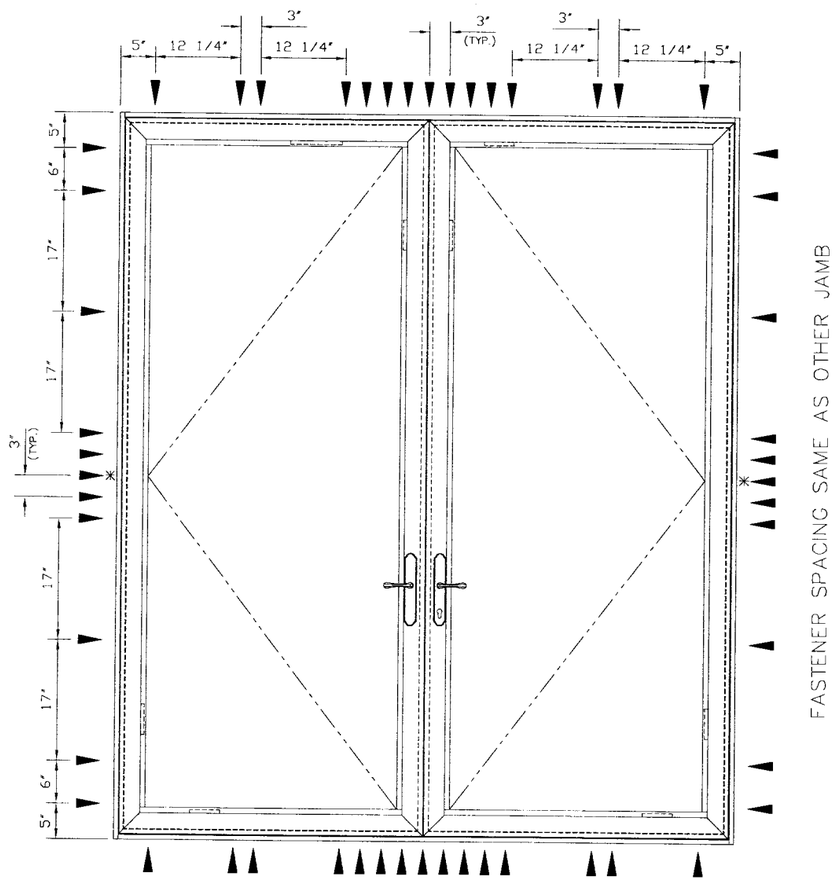

FASTENER SPACING SAME AS HEAD

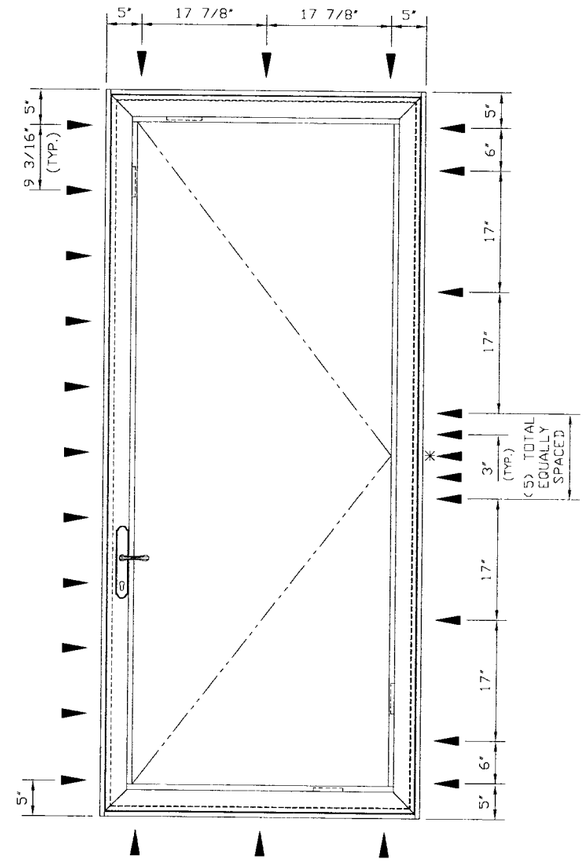

FASTENER SPACING SAME AS HEAD

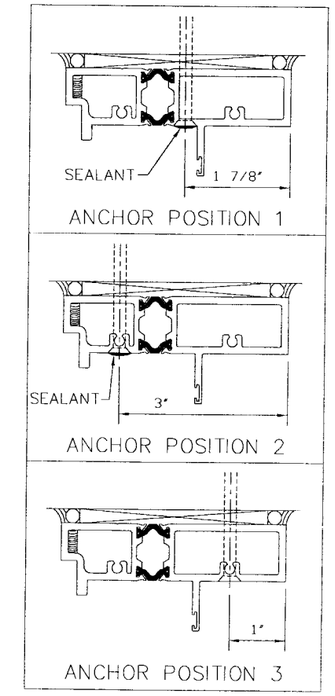

ANCHOR POSITIONS

REF FASTENER SCHEDULE BELOW

ANCHOR NOTES (WOOD SUBSTRATE):

1. ANCHORS SHALL BE INSTALLED IN ACCORDANCE WITH MANUFACTURER'S RECOMMENDATIONS.
2. ANCHOR EMBEDMENT SHALL BE INTO BASE SUBSTRATE MATERIAL, EXCLUDING SHIM, BUCK, OR STUCCO OR OTHER WALL FINISH.
3. BASE SUBSTRATE MATERIAL SHALL BE WOOD (SOUTHERN PINE W/ G=0.55 OR GREATER SPECIFIC GRAVITY).
4. SEE EXTERIOR ELEVATIONS ABOVE FOR ANCHOR LOCATIONS AND/OR SPACING.
5. ENSURE MINIMUM OF 1" EDGE DISTANCE FOR ALL WOOD ANCHORS.
6. ENSURE MINIMUM OF 1-1/2" EMBEDMENT FOR ALL WOOD ANCHORS.

PERIMETER FASTENER LOCATIONS

WOOD SUBSTRATE (SOUTHERN PINE, G=0.55)
D.P.=±100 PSF

WOOD ANCHOR SCHEDULE

#14-14 x 3" GRADE 5 FLAT HEAD WOOD SCREW OR THREAD FORMING SCREW (BY ELCO), OR 1/4" ELCO TAPCON (MIN Fy=92ksi)

▼ ANCHOR POSITIONS 1, 2, OR 3

* THESE PERIMETER FASTENERS TO GO THROUGH BUTT HINGE FOR ANCHOR POSITION 2

Approved as complying with the Florida Buiding Code
Date 04/26/2007
NOA# 06-0803.01
Miami Dade Product Control Division
By

FRANK L. BENNARDO, P.E.
PE0046549
03/15/2007

ENGINEERING EXPRESS®
160 SW 12th AVENUE, #106
DEERFIELD BEACH, FL 33442
PH: (954) 354-0660 FAX: (954) 354-0443
WWW.ENGEXP.COM
CERT OF AUTH #9885
A FRANK L. BENNARDO, P.E., INC. INNOVATION

Kawneer
An Alcoa Company
Product Engineering & Development
555 GUTHRIDGE COURT
NORCROSS, GEORGIA 30092
PHONE (770) 449-5555
FAX (770) 734-1560

2000T INSWING TERRACE DOOR
LARGE MISSILE IMPACT
SINGLE DOOR OR PAIR OF DOORS

REMARKS	DRWN	CHKD	DATE
INIT ISSUE	CL	FLB	7/17/06
REVISION	JEM	CL	03/09/07

06-KAW-0002
SCALE: - 01
PAGE DESCRIPTION:
-
-

13

7

F:\01 Project Files\Kawneer (KAW)\2006 Jobs\06-KAW-0002 2000T Terrace Door (NOA) Large Missile, Inswing\06-KAW-0002_00c 2000T Terrace Door (NOA) Large Missile, Inswing.dwg
03/15/2007 - 1:03pm joem

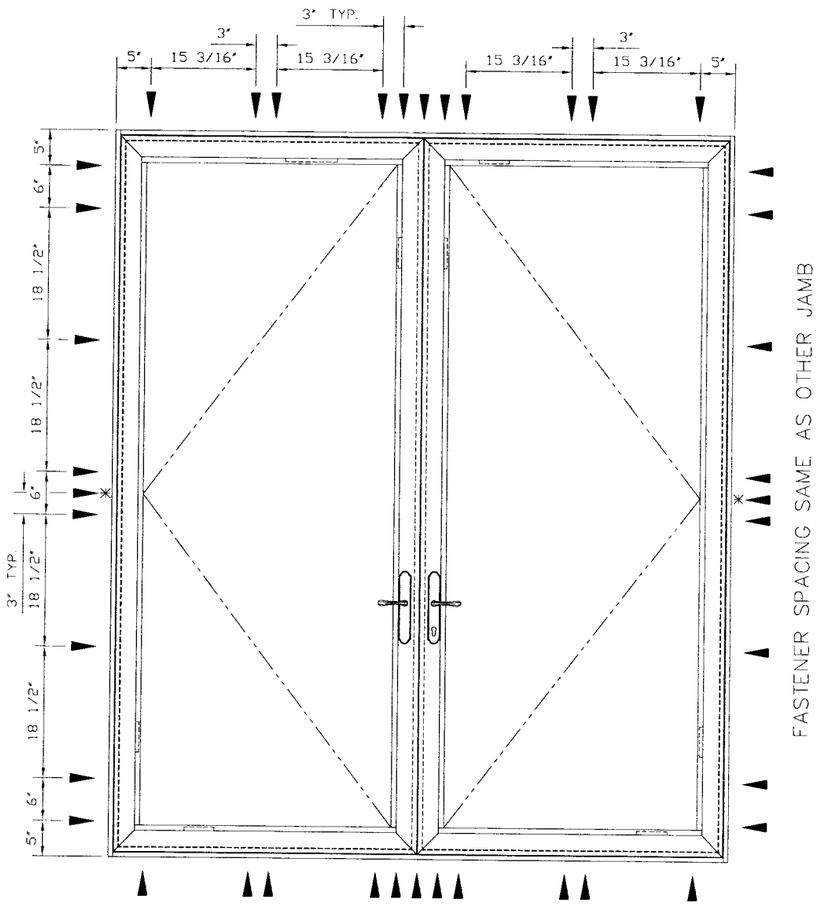

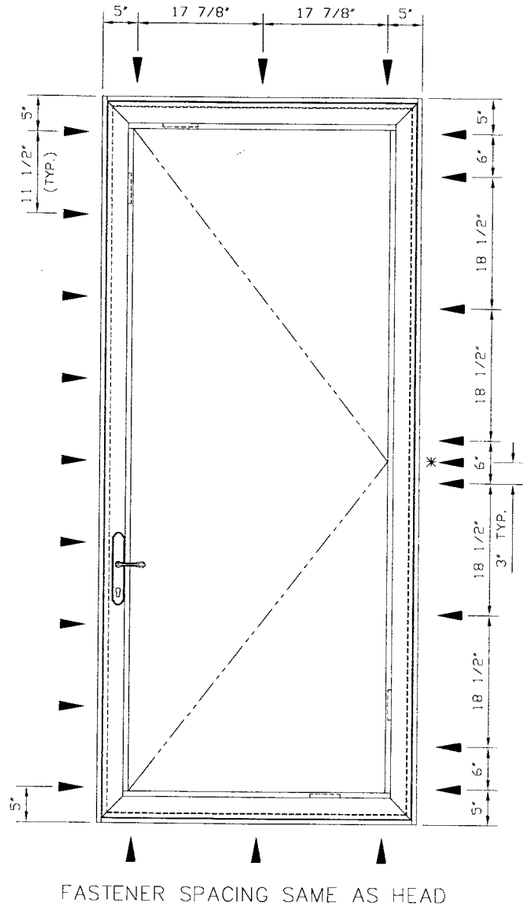

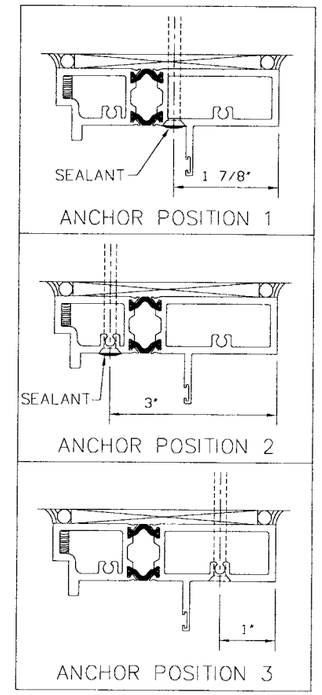

ANCHOR POSITIONS

REF FASTENER SCHEDULE BELOW

ANCHOR NOTES (ALUMINUM SUBSTRATE):

1. ANCHORS SHALL BE INSTALLED IN ACCORDANCE WITH MANUFACTURER'S RECOMMENDATIONS.
2. ANCHOR EMBEDMENT SHALL BE INTO BASE SUBSTRATE MATERIAL, EXCLUDING SHIM, BUCK, OR STUCCO OR OTHER WALL FINISH.
3. BASE SUBSTRATE MATERIAL SHALL BE 6063-T6 ALUMINUM (1/8" MIN THICKNESS).
4. SEE EXTERIOR ELEVATIONS ABOVE FOR ANCHOR LOCATIONS AND/OR SPACING.
5. ENSURE FULL THREAD ENGAGEMENT TO 1/8" MIN ALUMINUM SUBSTRATE.
6. ENSURE MINIMUM OF 1" EDGE DISTANCE.

PERIMETER FASTENER LOCATIONS

ALUMINUM SUBSTRATE (1/8" MIN THICKNESS)
D.P.=±65 PSF

* THESE PERIMETER FASTENERS TO GO THROUGH BUTT HINGE FOR ANCHOR POSITION 2

ALUMINUM ANCHOR SCHEDULE

#14-14 x 1-1/2" GRADE 5 FLAT HEAD THREAD FORMING SCREW (MIN Fy=92ksi)

▼ ANCHOR POSITIONS 1, 2, OR 3

Approved as complying with the Florida Buiding Code
Date 04/26/2007
NOA# 06-0803.01
Miami Dade Product Control Division
By

FRANK L. BENNARDO, P.E.
PE0046549
03/15/2007

ENGINEERING EXPRESS®
160 SW 12th AVENUE, #106
DEERFIELD BEACH, FL 33442
PH: (954) 354-0660 FAX: (954) 354-0443
WWW.ENGEXP.COM
CERT OF AUTH #9985
A FRANK L. BENNARDO, P.E., INC. INNOVATION

Kawneer
An Alcoa Company
555 GUTHRIDGE COURT
NORCROSS, GEORGIA 30092
PHONE (770) 449-5555
FAX (770) 734-1560
Product Engineering & Development

2000T INSWING TERRACE DOOR
LARGE MISSILE IMPACT
SINGLE DOOR OR PAIR OF DOORS

REMARKS	DRWN	CHKD	DATE
INIT ISSUE	CL	FLB	7/17/06
REVISION	JEM	CL	03/09/07

06-KAW-0002

SCALE: - 01

PAGE DESCRIPTION:
-
-

13

8

03/15/2007 - 1:03pm joem F:\01 Project Files\Kawneer (KAW)\2006 Jobs\06-KAW-0002 2000T Terrace Door (NOA) Large Missile, Inswing\06-KAW-0002_00c 2000T Terrace Door (NOA) Large Missile, Inswing.dwg

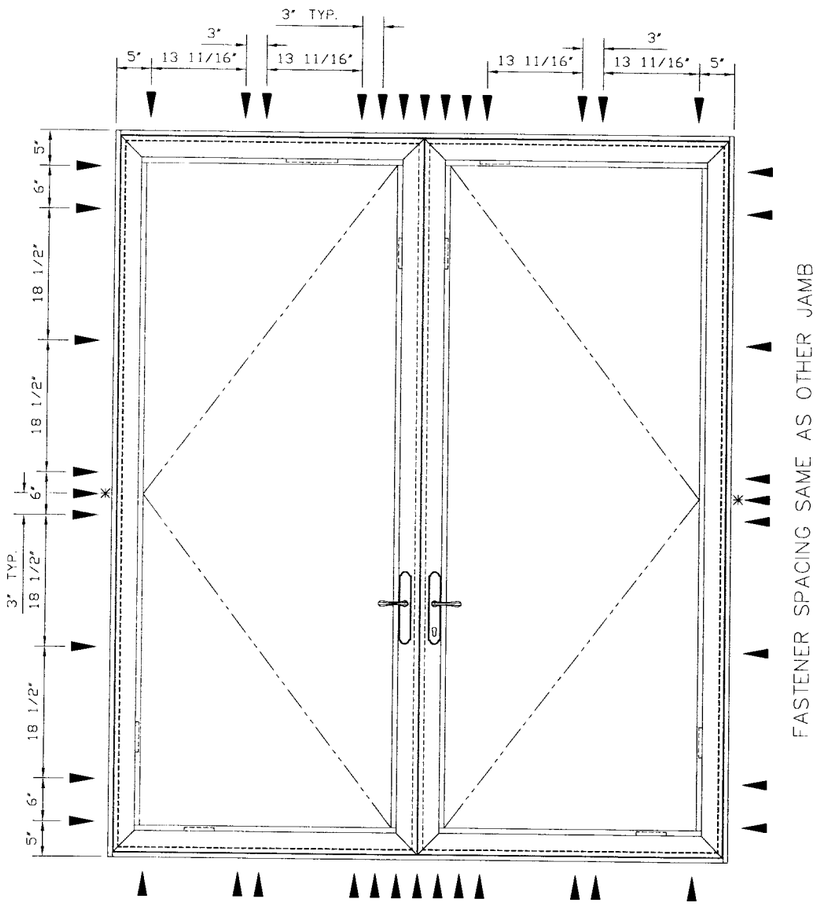

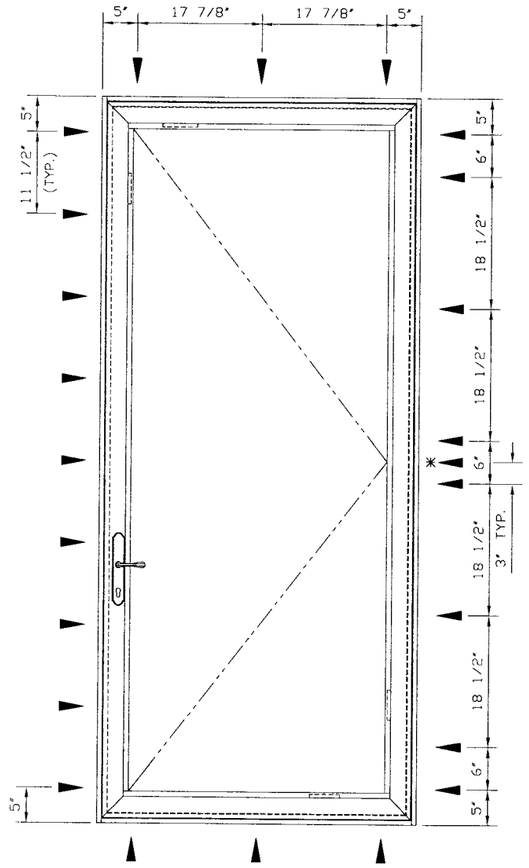

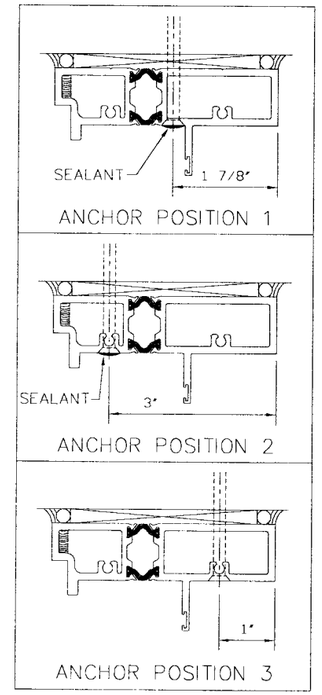

ANCHOR POSITIONS

REF FASTENER SCHEDULE BELOW

ANCHOR NOTES (ALUMINUM SUBSTRATE):

1. ANCHORS SHALL BE INSTALLED IN ACCORDANCE WITH MANUFACTURER'S RECOMMENDATIONS.
2. ANCHOR EMBEDMENT SHALL BE INTO BASE SUBSTRATE MATERIAL, EXCLUDING SHIM, BUCK, OR STUCCO OR OTHER WALL FINISH.
3. BASE SUBSTRATE MATERIAL SHALL BE 6063-T6 ALUMINUM (1/8" MIN THICKNESS).
4. SEE EXTERIOR ELEVATIONS ABOVE FOR ANCHOR LOCATIONS AND/OR SPACING.
5. ENSURE FULL THREAD ENGAGEMENT TO 1/8" MIN ALUMINUM SUBSTRATE.
6. ENSURE MINIMUM OF 1" EDGE DISTANCE.

PERIMETER FASTENER LOCATIONS

ALUMINUM SUBSTRATE (1/8" MIN THICKNESS)
D.P.=±100 PSF

ALUMINUM ANCHOR SCHEDULE

#14-14 x 1-1/2" GRADE 5 FLAT HEAD THREAD FORMING SCREW (MIN Fy=92ksi)

▼ ANCHOR POSITIONS 1, 2, OR 3

* THESE PERIMETER FASTENERS TO GO THROUGH BUTT HINGE FOR ANCHOR POSITION 2

Approved as complying with the Florida Buiding Code
Date 04/26/2007
NOA# 06-0803.01
Miami Dade Product Control Division
By

FRANK L. BENNARDO, P.E.
PE0046549
03/15/2007

ENGINEERING EXPRESS®
160 SW 12th AVENUE, #106
DEERFIELD BEACH, FL 33442
Ph: (954) 354-0660 FAX: (954) 354-0443
WWW.ENGEXP.COM
CERT OF AUTH #9885
A FRANK L. BENNARDO, P.E., INC. INNOVATION

Kawneer An Alcoa Company
555 GUTHRIDGE COURT
NORCROSS, GEORGIA 30092
PHONE (770) 449-5555
FAX (770) 734-1560
Product Engineering & Development

2000T INSWING TERRACE DOOR
LARGE MISSILE IMPACT
SINGLE DOOR OR PAIR OF DOORS

REMARKS	DRWN	CHKD	DATE
INIT ISSUE	CL	FLB	7/17/06
REVISION	JEM	CL	03/09/07

06-KAW-0002
SCALE: - 01
PAGE DESCRIPTION:
-
-

03/15/2007 - 1:03pm joem F:\01 Project Files\Kawneer (KAW)\2006 Jobs\06-KAW-0002 2000T Terrace Door (NOA) Large Missile, Inswing\06-KAW-0002_00c 2000T Terrace Door (NOA) Large Missile, Inswing.dwg

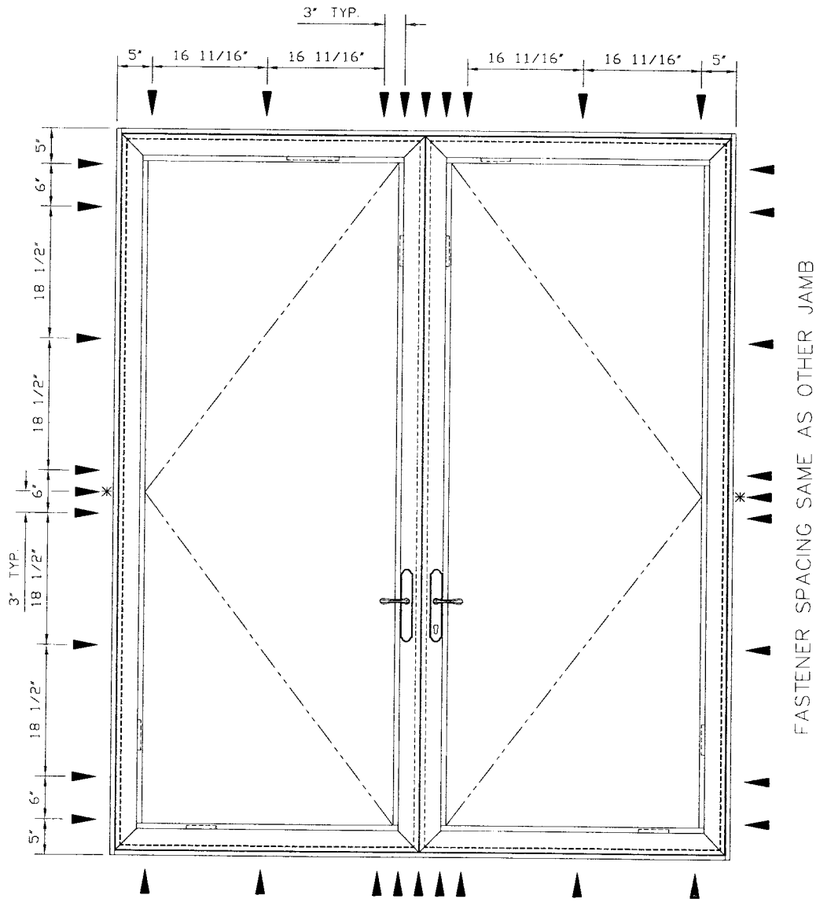

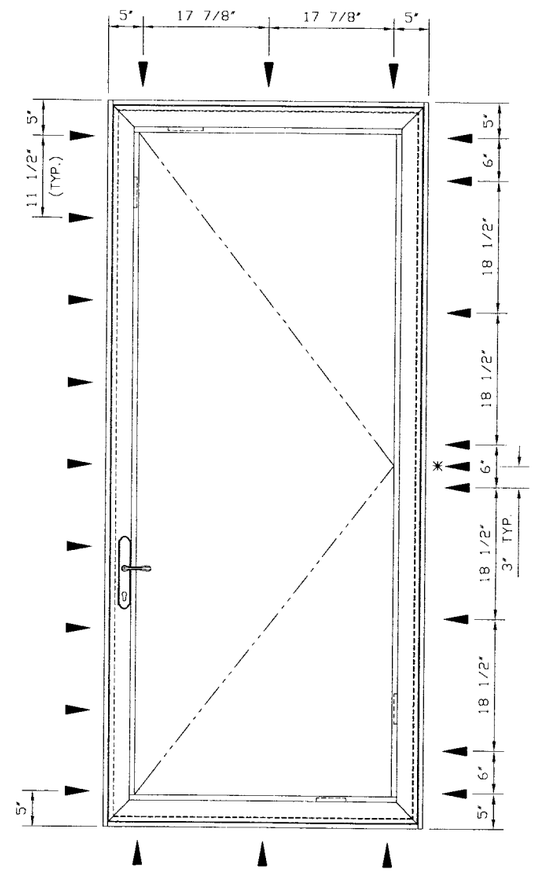

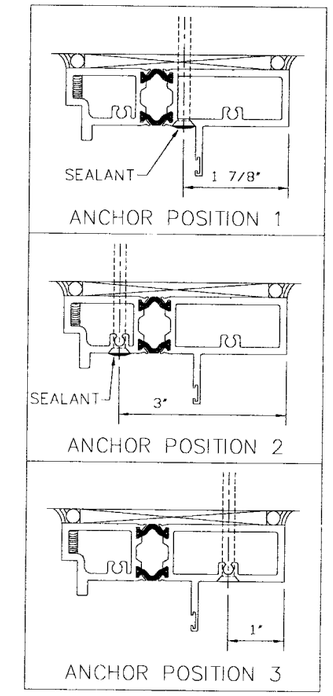

ANCHOR POSITIONS

REF FASTENER SCHEDULE BELOW

ANCHOR NOTES (STEEL SUBSTRATE):

1. ANCHORS SHALL BE INSTALLED IN ACCORDANCE WITH MANUFACTURER'S RECOMMENDATIONS.
2. ANCHOR EMBEDMENT SHALL BE INTO BASE SUBSTRATE MATERIAL, EXCLUDING SHIM, BUCK, OR STUCCO OR OTHER WALL FINISH.
3. BASE SUBSTRATE MATERIAL SHALL BE A36 STEEL (1/8" MIN THICKNESS).
4. SEE EXTERIOR ELEVATIONS ABOVE FOR ANCHOR LOCATIONS AND/OR SPACING.
5. ENSURE FULL THREAD ENGAGEMENT TO 1/8" MIN STEEL SUBSTRATE.
6. ENSURE MINIMUM OF 1" EDGE DISTANCE.

PERIMETER FASTENER LOCATIONS

STEEL SUBSTRATE (1/8" MIN THICKNESS)
D.P.=±65 PSF

STEEL ANCHOR SCHEDULE

#14-14 x 2" GRADE 5 FLAT HEAD #4 POINT SELF-DRILLING SCREW BY ELCO (MIN Fy=92ksi)

▼ ANCHOR POSITIONS 1, 2, OR 3

* THESE PERIMETER FASTENERS TO GO THROUGH BUTT HINGE FOR ANCHOR POSITION 2

Approved as complying with the Florida Buiding Code
Date 04/26/2007
NOA# 06-0803.01
Miami Dade Product Control Division
By

FRANK L. BENNARDO, P.E.
PE0046549
03/15/2007

ENGINEERING EXPRESS®
160 SW 12th AVENUE, #106
DEERFIELD BEACH, FL 33442
PH: (954) 354-0660 FAX: (954) 354-0443
WWW.ENGEXP.COM
CERT OF AUTH #9885
A FRANK L. BENNARDO, P.E., INC. INNOVATION

Kawneer
An Alcoa Company
Product Engineering & Development
555 GUTHRIDGE COURT
NORCROSS, GEORGIA 30092
PHONE (770) 449-5555
FAX (770) 734-1560

2000T INSWING TERRACE DOOR
LARGE MISSILE IMPACT
SINGLE DOOR OR PAIR OF DOORS

REMARKS	DRWN	CHKD	DATE
INIT. ISSUE	CL	FLB	7/17/06
REVISION	JEM	CL	03/09/07

06-KAW-0002
SCALE: - 01
PAGE DESCRIPTION:
-
-

03/15/2007 - 1:04pm joem F:\01 Project Files\Kawneer (KAW)\2006 Jobs\06-KAW-0002 2000T Terrace Door (NOA) Large Missile, Inswing\06-KAW-0002_00c 2000T Terrace Door (NOA) Large Missile, Inswing.dwg

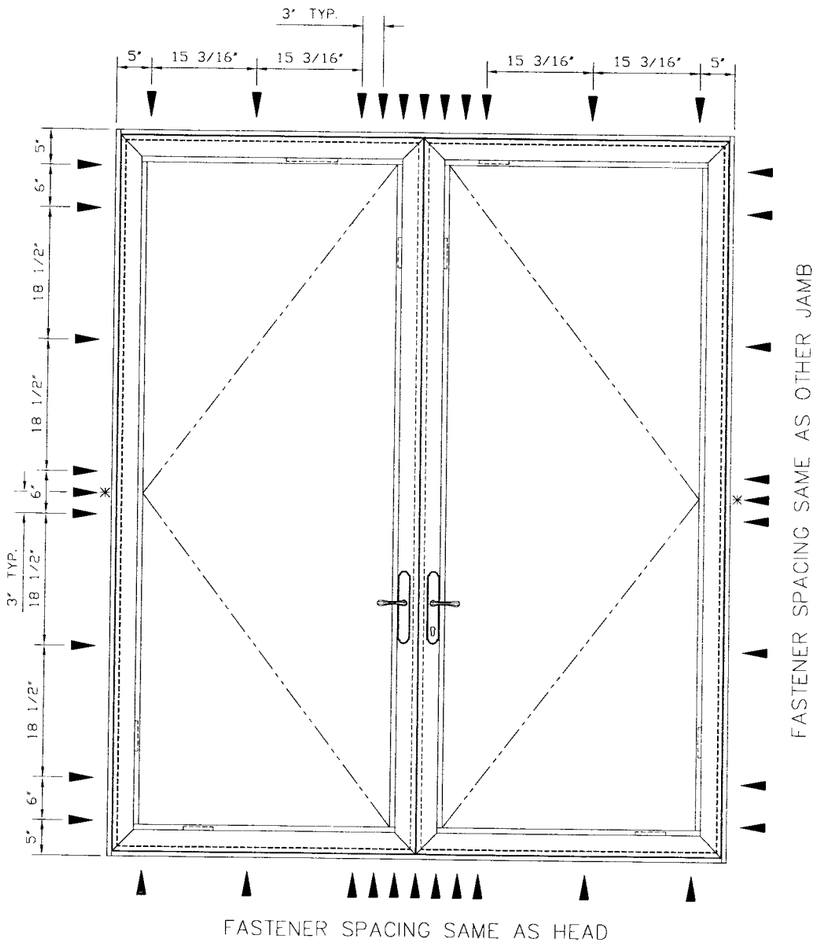

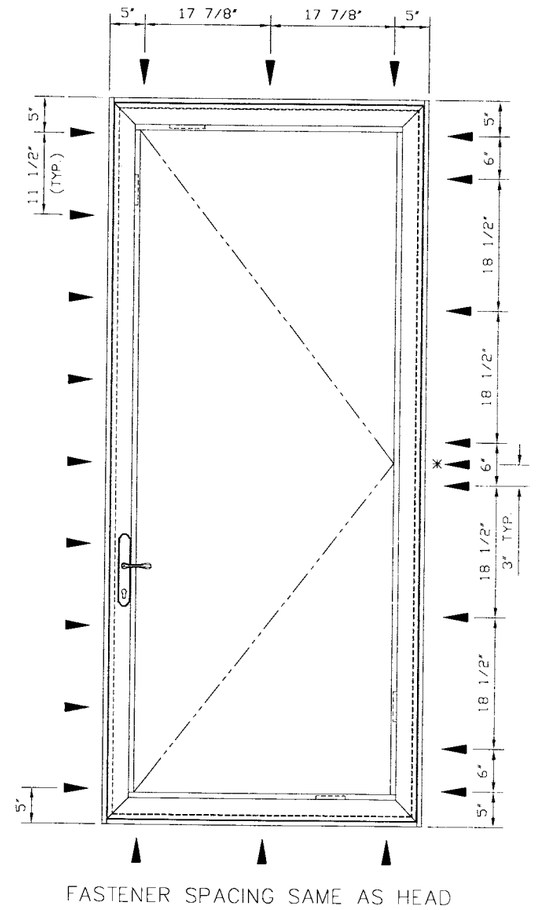

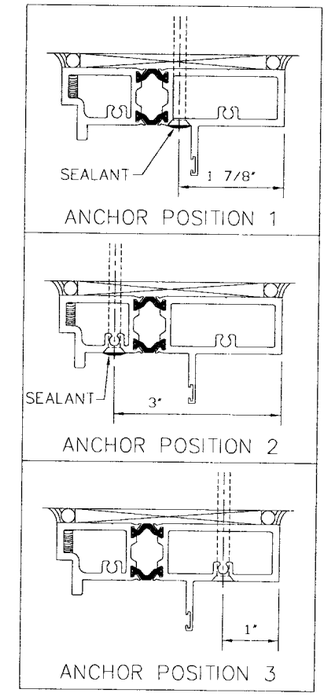

ANCHOR POSITIONS

REF FASTENER SCHEDULE BELOW

ANCHOR NOTES (STEEL SUBSTRATE):

1. ANCHORS SHALL BE INSTALLED IN ACCORDANCE WITH MANUFACTURER'S RECOMMENDATIONS.
2. ANCHOR EMBEDMENT SHALL BE INTO BASE SUBSTRATE MATERIAL, EXCLUDING SHIM, BUCK, OR STUCCO OR OTHER WALL FINISH.
3. BASE SUBSTRATE MATERIAL SHALL BE A36 STEEL (1/8" MIN THICKNESS).
4. SEE EXTERIOR ELEVATIONS ABOVE FOR ANCHOR LOCATIONS AND/OR SPACING.
5. ENSURE FULL THREAD ENGAGEMENT TO 1/8" MIN STEEL SUBSTRATE.
6. ENSURE MINIMUM OF 1" EDGE DISTANCE.

PERIMETER FASTENER LOCATIONS

STEEL SUBSTRATE (1/8" MIN THICKNESS)
D.P.=±100 PSF

STEEL ANCHOR SCHEDULE

#14-14 x 2" GRADE 5 FLAT HEAD #4 POINT SELF-DRILLING SCREW BY ELCO (MIN Fy=92ksi)

▼ ANCHOR POSITIONS 1, 2, OR 3

* THESE PERIMETER FASTENERS TO GO THROUGH BUTT HINGE FOR ANCHOR POSITION 2

Approved as complying with the Florida Buiding Code
Date 04/26/2007
NOA# 06-0803.01
Miami Dade Product Control Division
By

FRANK L. BENNARDO, P.E.
PE0046549
03/15/2007

ENGINEERING EXPRESS®
160 SW 12th AVENUE, #106
DEERFIELD BEACH, FL 33442
PH: (954) 354-0660 FAX: (954) 354-0443
WWW.ENGEXP.COM
CERT OF AUTH #9885
A FRANK L. BENNARDO, P.E., INC. INNOVATION

Kawneer
An Alcoa Company
555 GUTHRIDGE COURT
NORCROSS, GEORGIA 30092
PHONE (770) 449-5555
FAX (770) 734-1560
Product Engineering & Development

2000T INSWING TERRACE DOOR
LARGE MISSILE IMPACT
SINGLE DOOR OR PAIR OF DOORS

REMARKS	DRWN	CHKD	DATE
INIT ISSUE	CL	FLB	7/17/06
REVISION	JEM	CL	03/09/07

06-KAW-0002
SCALE: - 01
PAGE DESCRIPTION:
-
-

03/15/2007 - 1:04pm joem F:\01 Project Files\Kawneer (KAW)\2006 Jobs\06-KAW-0002 2000T Terrace Door (NOA) Large Missile, Inswing\06-KAW-0002_00c 2000T Terrace Door (NOA) Large Missile, Inswing.dwg

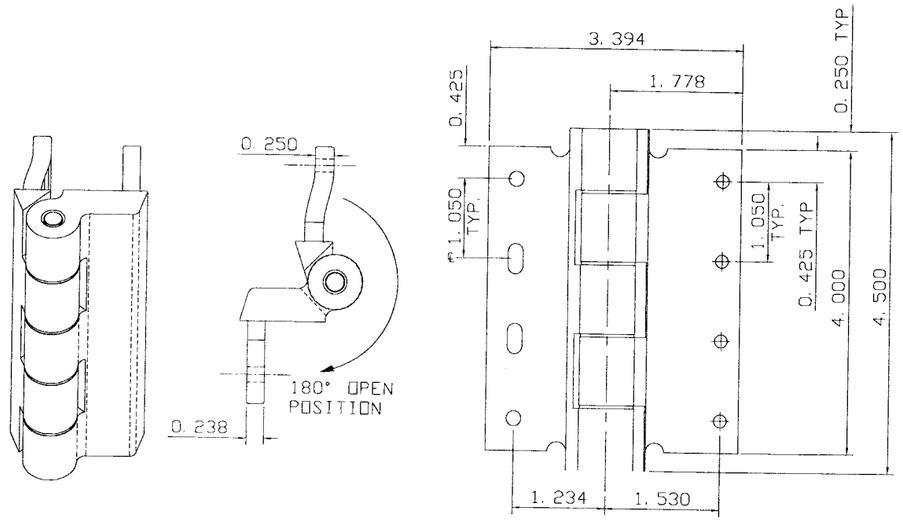

BUTT HINGE DETAILS

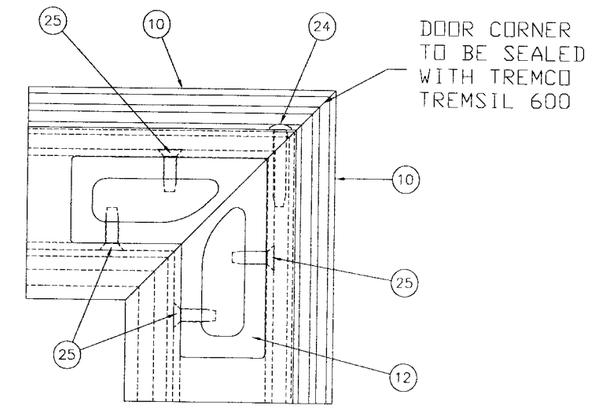

TYPICAL DOOR CORNER

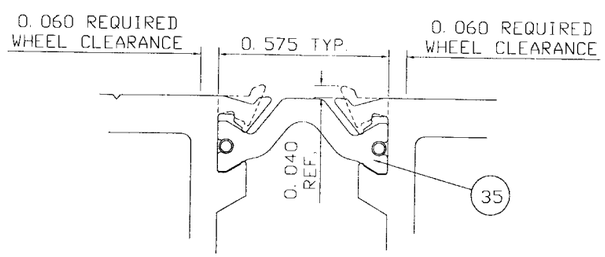

NOTE: ASSEMBLY MUST MEET 900 LBS. MINIMUM SHEAR

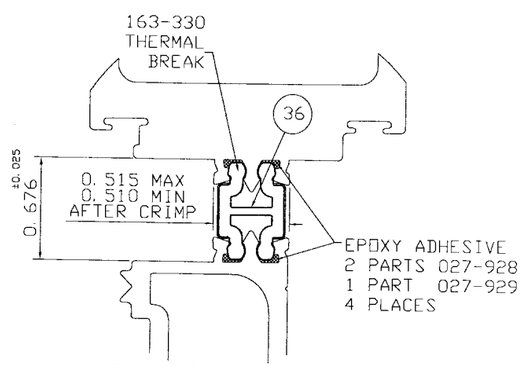

NOTE: ASSEMBLY MUST MEET 2500 LBS. MINIMUM SHEAR

THERMAL BREAK DETAILS

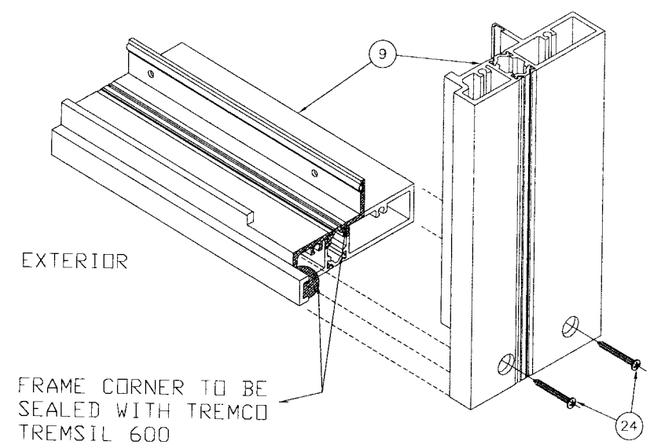

TYPICAL FRAME CORNER

Approved as complying with the Florida Building Code
Date 04/26/2007
NOA# 06-0803.01
Miami Dade Product Control Division
By

FRANK L. BENNARDO, P.E.
PE0046549
03/15/2007

ENGINEERING EXPRESS®
160 SW 12th AVENUE, # 106
DEERFIELD BEACH, FL 33442
PH: (954) 354-0660 FAX: (954) 354-0443
WWW.ENGEXP.COM
CERT OF AUTH #9885
A FRANK L. BENNARDO, P.E., INC. INNOVATION

Kawneer
An Alcoa Company
Product Engineering & Development
555 GUTHRIDGE COURT
NORCROSS, GEORGIA 30092
PHONE (770) 449-5555
FAX (770) 734-1560

2000T INSWING TERRACE DOOR
LARGE MISSILE IMPACT
SINGLE DOOR OR PAIR OF DOORS

REMARKS	DRWN	CHKD	DATE
INIT ISSUE	CL	FLB	7/17/06
REVISION	JEM	CL	03/09/07

06-KAW-0002

SCALE: - 01

PAGE DESCRIPTION:
-
-

13

12

03/15/2007 - 1:04pm joem F:\01 Project Files\Kawneer (KAW)\2006 Jobs\06-KAW-0002 2000T Terrace Door (NOA) Large Missile, Inswing\06-KAW-0002_00c 2000T Terrace Door (NOA) Large Missile, Inswing.dwg

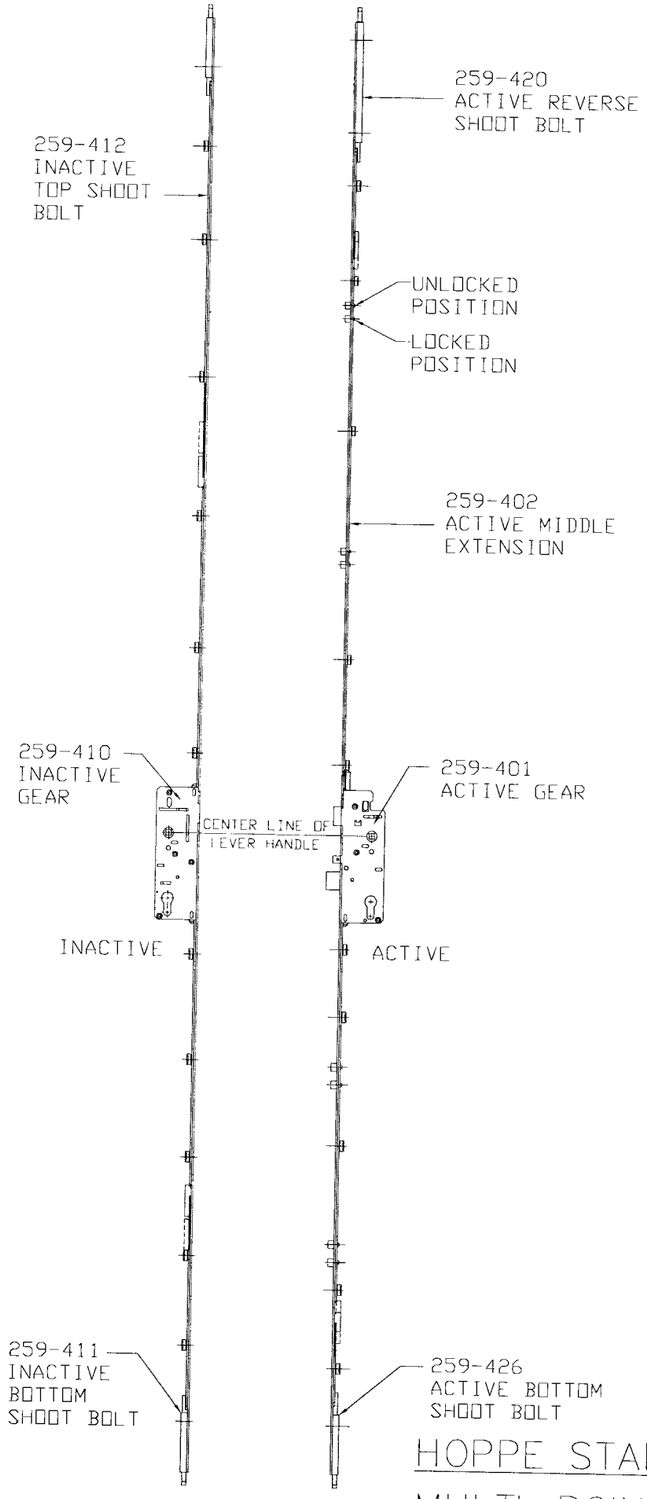

HOPPE STAINLESS STEEL

MULTI-POINT LOCK

MATERIAL PARTS LIST

NO.	DESCRIPTION	PART NO.	MATERIAL
1	3/16" FIXED GASKET	027-922	EPDM
2	STRUCTURAL SILICONE	127-007	DOW CORNING 995
3	Q-LON WEATHERSEAL	127-043	POLYURETHANE FOAM
4	3/8" GLAZING ROD	127-050	BUTYL
5	SETTING BLOCK	127-045	EPDM
6	FIXED GASKET	127-038	EPDM
7	GLASS STOP	259-064	6063-T6 ALUMINUM
8	SMALL THRESHOLD	259-081	6063-T6 ALUMINUM
9	FRAME HEAD/SILL/JAMB	259-201	6063-T6 ALUMINUM
10	DOOR STILE/RAIL	259-202	6063-T6 ALUMINUM
11	INACTIVE STILE ADAPTER	259-247	6063-T6 ALUMINUM
12	DOOR CORNER CLIP	259-301	6063-T6 ALUMINUM
13	BUTT HINGE	259-353	6063-T6 ALUMINUM
14	FRAME SEALING PAD	127-055	PVC FOAM
15	ACTIVE LATCH & DEADBOLT KEEPER	259-373	300 STAINLESS STEEL
16	HEAD/SILL SHOOT BOLT KEEPER	259-375	TURNED BRASS
17	ACTIVE FOUR POINT GEAR	259-401	300 STAINLESS STEEL
18	INACTIVE GEAR	259-410	300 STAINLESS STEEL
19	ACTIVE HANDLE/TRIM KIT	259-559	NICKEL-BRASS
20	GLASS STOP COVER	259-065	6063-T6 ALUMINUM
21	INACTIVE HANDLE/TRIM KIT	259-560	NICKEL-BRASS
22	#10 x 3/4" TORX PAN HEAD TFS	128-507	300 STAINLESS STEEL
23	#10 x 1-3/4" TORX PAN HEAD TFS	128-535	300 STAINLESS STEEL
24	#12 x 1-1/2" TORX PAN HEAD TFS	128-536	300 STAINLESS STEEL
25	1/4-14 x 3/4" TORX FLAT HEAD TFS	128-537	300 STAINLESS STEEL
26	#8-18 x1" TORX FLAT HEAD SELF DRILLING SCREW	128-538	300 STAINLESS STEEL
27	ACTIVE MIDDLE EXTENSION	259-402	300 STAINLESS STEEL
28	INACTIVE STILE ADAPTER	259-246	6063-T6 ALUMINUM
29	#10 x 7/16" TORX PAN HEAD TFS	128-414	300 STAINLESS STEEL
30	WEATHERING	127-054	POLYURETHANE FOAM
31	ACTIVE TOP REV SHOOT BOLT	259-420	300 STAINLESS STEEL
32	ACTIVE BOTTOM SHOOT BOLT	259-426	300 STAINLESS STEEL
33	INACTIVE SILL SHOOT BOLT	259-411	300 STAINLESS STEEL
34	INACTIVE TOP SHOOT BOLT	259-412	300 STAINLESS STEEL
35	14.6 MM OFFSET INSULBAR BY ENSINGER	259-351	NYLON
36	1/2" THERMAL BREAK WITH ADHESIVE APOXY	163-330	NYLON

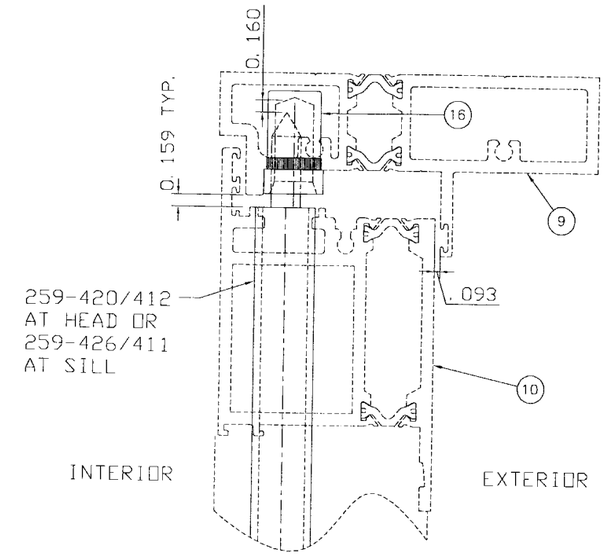

SHOOT BOLT KEEPER DETAIL

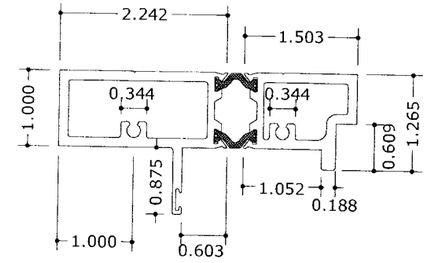

9 FRAME HEAD/SILL/JAMB
1" = 1'-0"

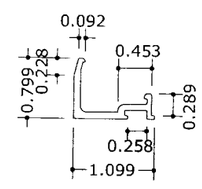

7 GLASS STOP
1" = 1'-0"

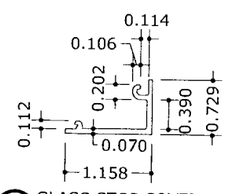

20 GLASS STOP COVER
1" = 1'-0"

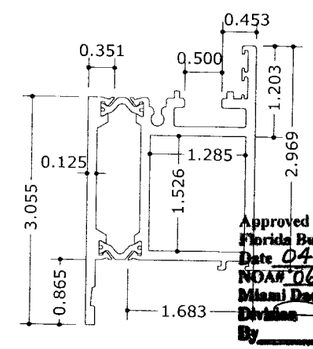

10 DOOR STILE RAIL
1" = 1'-0"

Approved as complying with the Florida Building Code
Date 04/26/2007
NOA# 06-0803.01
Miami Dade Product Control Division
By

FRANK L. BENNARDO, P.E.
PE0046549
03/15/2007

ENGINEERING EXPRESS®
160 SW 12th AVENUE, #106
DEERFIELD BEACH, FL 33442
PH: (954) 354-0660 FAX: (954) 354-0443
WWW.ENGEXP.COM
CERT OF AUTH #9885
A FRANK L. BENNARDO, P.E., INC. INNOVATION

Kawneer
An Alcoa Company
555 GUTHRIDGE COURT
NORCROSS, GEORGIA 30092
PHONE (770) 449-5555
FAX (770) 734-1560
Product Engineering & Development

2000T INSWING TERRACE DOOR
LARGE MISSILE IMPACT
SINGLE DOOR OR PAIR OF DOORS

REMARKS	DRWN	CHKD	DATE
INIT ISSUE	CL	FLB	7/17/06
REVISION	JEM	CL	03/09/07

06-KAW-0002
SCALE: - 01
PAGE DESCRIPTION:

13

F:\01 Project Files\Kawneer (KAW)\2006 Jobs\06-KAW-0002 2000T Terrace Door (NOA) Large Missile, Inswing.dwg
03/15/2007 - 1:04pm joem