MIAMI-DADE COUNTY

BUILDING CODE COMPLIANCE OFFICE (BCCO)
PRODUCT CONTROL DIVISION

MIAMI-DADE COUNTY, FLORIDA
METRO-DADE FLAGLER BUILDING
140 WEST FLAGLER STREET, SUITE 1603
MIAMI, FLORIDA 33130-1563
(305) 375-2901 FAX (305) 375-2908
www.buildingcodeonline.com

NOTICE OF ACCEPTANCE (NOA)

PGT Industries
1070 Technology Drive
Nokomis, FL 34275

SCOPE:

This NOA is being issued under the applicable rules and regulations governing the use of construction materials. The documentation submitted has been reviewed by Miami-Dade County Product Control Division and accepted by the Board of Rules and Appeals (BORA) to be used in Miami Dade County and other areas where allowed by the Authority Having Jurisdiction (AHJ).

This NOA shall not be valid after the expiration date stated below. The Miami-Dade County Product Control Division (In Miami Dade County) and/or the AHJ (in areas other than Miami Dade County) reserve the right to have this product or material tested for quality assurance purposes. If this product or material fails to perform in the accepted manner, the manufacturer will incur the expense of such testing and the AHJ may immediately revoke, modify, or suspend the use of such product or material within their jurisdiction. BORA reserves the right to revoke this acceptance, if it is determined by Miami-Dade County Product Control Division that this product or material fails to meet the requirements of the applicable building code.

This product is approved as described herein, and has been designed to comply with the Florida Building Code, including the High Velocity Hurricane Zone.

DESCRIPTION: Series "SGD – 830 Aluminum Sliding Glass Door – Non Impact

APPROVAL DOCUMENT: Drawing No.**4392-3**, titled " Alum. Sliding Glass Door, Non-Impact", sheets 1 through 13 of 13, dated 06/24/04 with revision "G ,dated 06/24/07, prepared by PGT Industries, signed and sealed by Robert L. Clark, P.E., bearing the Miami-Dade County Product Control Revision stamp with the Notice of Acceptance number and expiration date by the Miami-Dade County Product Control Division.

MISSILE IMPACT RATING: None

LABELING: Each unit shall bear a permanent label with the manufacturer's name or logo, city, state and following statement: "Miami-Dade County Product Control Approved", unless otherwise noted herein.

RENEWAL of this NOA shall be considered after a renewal application has been filed and there has been no change in the applicable building code negatively affecting the performance of this product.

TERMINATION of this NOA will occur after the expiration date or if there has been a revision or change in the materials, use, and/or manufacture of the product or process. Misuse of this NOA as an endorsement of any product, for sales, advertising or any other purposes shall automatically terminate this NOA. Failure to comply with any section of this NOA shall be cause for termination and removal of NOA.

ADVERTISEMENT: The NOA number preceded by the words Miami-Dade County, Florida, and followed by the expiration date may be displayed in advertising literature. If any portion of the NOA is displayed, then it shall be done in its entirety.

INSPECTION: A copy of this entire NOA shall be provided to the user by the manufacturer or its distributors and shall be available for inspection at the job site at the request of the Building Official.

This NOA **revises NOA # 02-0828.13** and consists of this page 1 and evidence pages E-1 and E-2, as well as approval document mentioned above.

The submitted documentation was reviewed by **Mohammed Iqbal Shaikh, P.E.**

PRODUCT CONTROL ACCEPTED 08/19/07

PGT Industries

NOTICE OF ACCEPTANCE: EVIDENCE SUBMITTED

A. DRAWINGS

1. Manufacturer's die drawings and sections.
2. Drawing No **4392-3**, Sheets 1 through 13 of 13, titled " Alum. Sliding Glass Door, Non -Impact", prepared by PGT Industries, dated 06/24/04 with revision G dated 06/01/07, signed and sealed by Robert L. Clark, P.E.

B. TESTS

1. Test reports on 1) Air Infiltration Test, per SFBC, PA 202-94
   2) Uniform Static Air Pressure Test, Loading per SFB, PA 202-94
   3) Water Resistance Test, per FBC, PA 202-94
   4) Forced Entry Test, per FBC 3603.2 (b) and TAS 202-94

   along with marked-up drawings and installation diagram of aluminum sliding glass door w/ 3/8" tempered glass, prepared by Fenestration Testing Laboratory, Inc, Test Report No. **FTL-3510** 7/18/02 signed and sealed by James G. Worth.
2. Test reports on 1) Uniform Static Air Pressure Test, Loading per FBC, TAS 202-94 along with marked-up drawings and installation diagram of one specimen of an aluminum sliding glass door w/ ¼" tempered glass, prepared by Fenestration Testing Laboratory, Inc. Test Report No. **FTL-3509**, dated 7/18/02, signed and sealed by James G. Worth, P.E.
3. Test reports on 1) Uniform Static Air Pressure Test, Loading per FBC, TAS 202- along with marked-up drawings and installation diagram of one specimen of an aluminum sliding glass door w/ 3/16" tempered glass, prepared by Fenestration Testing Laboratory, Inc. Test Report No. **FTL-3508**, dated 7/18/02, signed and sealed by James G. Worth, P.E.
4. Test reports on 1) Air Infiltration Test, per FBC, TAS 202-94
   2) Uniform Static Air Pressure Test, Loading per FBC TAS 202-94
   3) Water Resistance Test, per FBC, TAS 202-94
   4) Small Missile Impact Test per FBC, TAS 201-94
   5) Cyclic Wind Pressure Loading per FBC, TAS 203-94
   6) Forced Entry Test, per FBC 3603.2 (b) and TAS 202-94

   along with marked-up drawings and installation diagram of three specimens of an aluminum sliding glass door w/ two 3/16" tempered lites w/.090" Dupont Butacite PVB laminated glass, prepared by Fenestration Testing Laboratory, Inc., Test Report No. **FTL-3512**, dated 7/16/02, signed and sealed by James G. Worth, P.E.
   (For reference of full 202 only)

C. CALCULATIONS

1. Revised Anchor Calculations and structural analysis, prepared by PGT Induistries, Inc. dated 07/21/06, signed and sealed by Robert L. Clark, P.E.
   Complies with ASTM-E1300-98

Mohammed Iqbal Shaikh, P.E.
Sr. Building Code Compliance Specialist
NOA No. 06-0807.04
Expiration Date: March 13, 2008
Approval Date: September 13, 2007

2. Revised Anchor Calculations and structural analysis, prepared by PGT Industries, Inc., dated 08/13/07, signed and sealed by Robert L. Clark, P.E.

D. QUALITY ASSURANCE

1. Miami Dade Building Code Compliance Office (BCCO).

E. MATERIAL CERTIFICATIONS

1. None.

F. STATEMENTS

1. Statement letter of conformance, dated 8/21/02, signed and sealed by Robert L. Clark, P.E.

2. Statement letter of no financial interest, dated 8/20/02, signed and sealed by Robert L. Clark, P.E.

3. Laboratory compliance letters for Test Reports No. **FTL 3508, FTL 3509 and FTL 3510** issued by Fenestration Testing Laboratory, Inc. dated 7/30/02, signed and sealed by James G. Worth, P.E.

G. OTHER

1. Letter form consultants, dated July 7, 2006, stating that the product is in compliance with Florida Building Code (FBC)
2. Notice of Acceptance No. 02-0828.13, issued to PGT Industries, Series SGD-830 Mid Rise Alum. Sliding Glass Door – Non Impact Approved on 03/13/03 and expiring on 03/13/08

(Add this paragraph when a file is being revised or renewed only.)

Mohammed Iqbal Shaikh, P.E.
Sr. Building Code Compliance Specialist
NOA No. 06-0807.04
Expiration Date: March 13, 2008
Approval Date: September 13, 2007

GENERAL NOTES: NON-IMPACT SLIDING GLASS DOOR

1. GLAZING OPTIONS: A. 3/16" TEMPERED GLASS B. 1/4" TEMPERED GLASS C. 3/8" TEMPERED GLASS

2. CONFIGURATIONS: OX, XO, OXO, OXXO

3. DESIGN PRESSURES: SEE TABLES, SHEETS 3 THROUGH 5
   A. NEGATIVE DESIGN LOADS BASED ON TESTED PRESSURE AND GLASS TABLES ASTM E 1300-02.
   B. POSITIVE DESIGN LOADS BASED ON WATER TEST PRESSURE AND GLASS TABLES ASTM E 1300-02.

4. ANCHORAGE: THE 33 1/3% STRESS INCREASE HAS NOT BEEN USED IN THE DESIGN OF THIS PRODUCT. MATERIALS, INCLUDING BUT NOT LIMITED TO STEEL SCREWS, THAT COME INTO CONTACT WITH OTHER DISSIMILAR MATERIALS SHALL MEET THE REQUIREMENTS OF THE FLORIDA BUILDING CODE, CURRENT EDITION. FOR ANCHORAGE DETAILS SEE SHEETS 3 THROUGH 6.

5. MIAMI-DADE COUNTY APPROVED SHUTTERS ARE REQUIRED IN MIAMI-DADE COUNTY AND WHERE IMPACT RESISTANCE IS REQUIRED..

6. INSTALLATION SCREWS, FRAME AND PANEL CORNERS SEALED WITH NARROW JOINT SEALANT.

7. REFERENCES: TEST REPORTS, FTL-3508, FTL-3509, FTL-3510
   ELCO TEXTRON NOA: 04-0721.01, 03-0225.05
   ANSI/AF&PA NDS-2005 FOR WOOD CONSTRUCTION
   ADM-2005 ALUMINUM DESIGN MANUAL

8. THIS PRODUCT HAS BEEN DESIGNED & TESTED TO COMPLY WITH THE REQUIREMENTS OF THE FLORIDA BUILDING CODE, CURRENT EDITION INCLUDING THE HIGH VELOCITY HURRICANE ZONE (HVHZ).

9. THE MINIMUM WIDTH FOR THE OPERABLE DOOR OF "MEANS OF EGRESS DOORS" MUST COMPLY WITH THE FBC.

NOA DRAWING MAP

	SHEET
GENERAL NOTES	1
GLAZING DETAILS	1
DESIGN PRESSURES	3-5
ELEVATIONS	2
CONFIGURATIONS	1
VERT. SECTIONS	7
HORIZ. SECTIONS	8-10
PARTS LIST	11
EXTRUSIONS	12-13
CORNER ASSEMBLY	13
ANCHORAGE	3-6

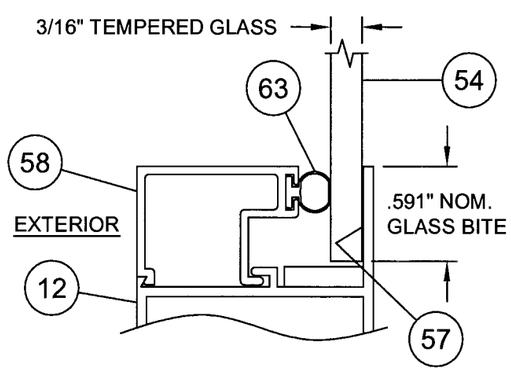

3/16" GLAZING DETAIL

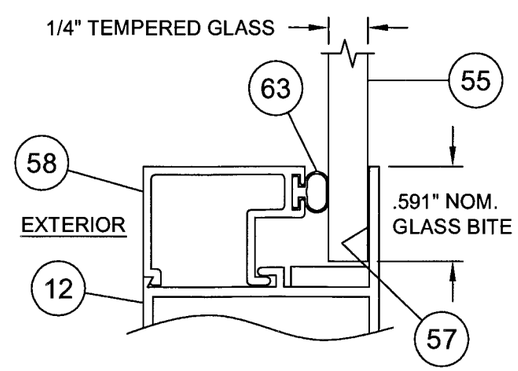

1/4" GLAZING DETAIL

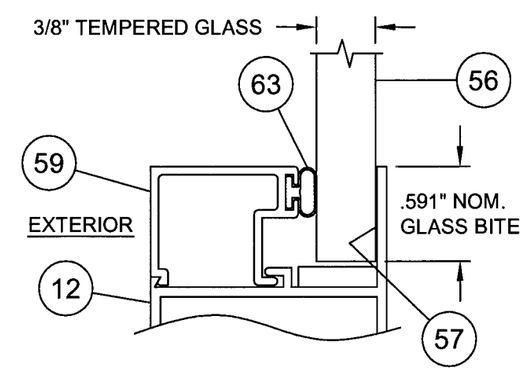

3/8" GLAZING DETAIL

Revsd By:	Date:	Revisions:	
Revsd By:	Date:	Revisions:	
Revsd By: F.K.	Date: 6/1/07	Revisions: G	REDRAWN. ADDED UNIQUE 1/4 AND 3/8 GLAZING DETAILS
Drawn By: F.K.	Date: 6/24/04	Checked By: J.J.	Date: XX/XX/XX

1070 TECHNOLOGY DRIVE
NOKOMIS, FL 34275

P.O. BOX 1529
NOKOMIS, FL 34274

PGT Visibly Better

Description: NOTES, GLAZING DETAILS & MAP

Title: ALUM. SLIDING GLASS DOOR, NON-IMPACT

Series/Model:	Scale:	Sheet:	Drawing No.	Rev:
SGD830	1x	1 of 13	4392-3	G

Product Control Section
Building Department
Miami-Dade County, Florida
Product Control No. 06-0807.04
Expiration Date 03/13/08
By: M Thark
Miami-Dade Product Control Division

R L Clark
8/13/07

Robert L. Clark, P.E.
PE #39712
Structural

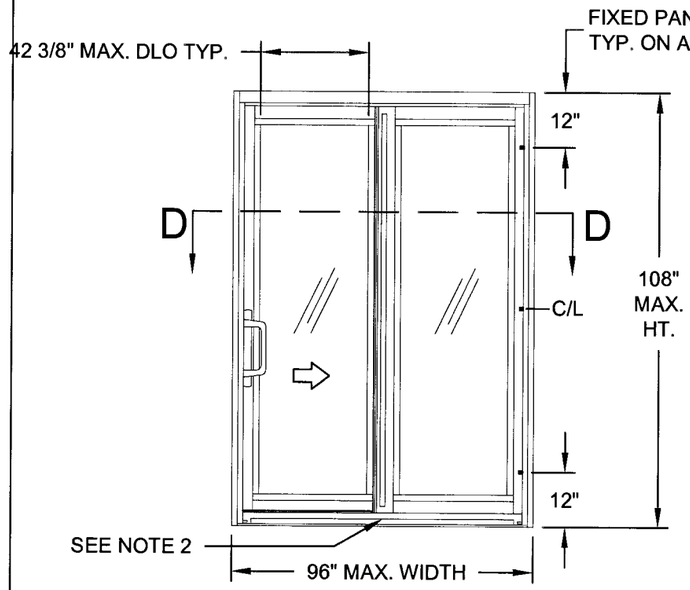

XO OR OX

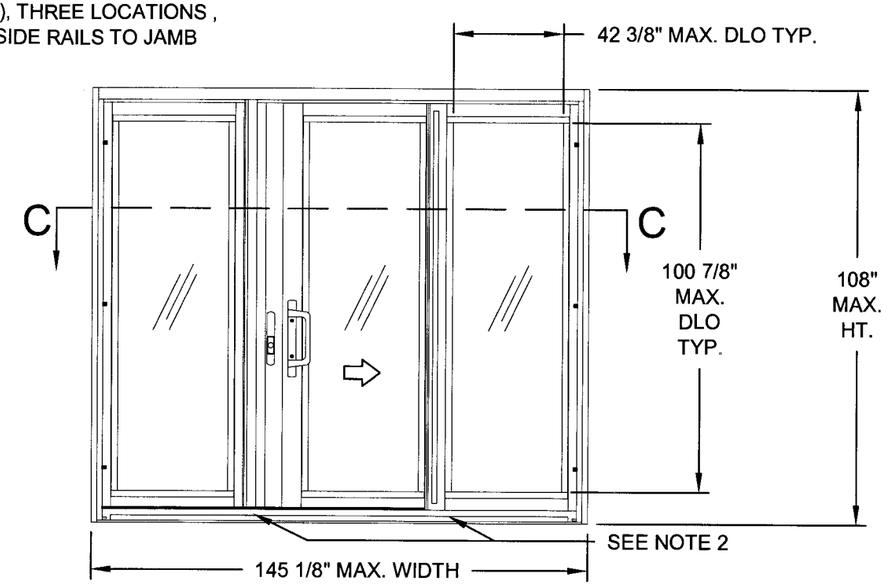

OXO

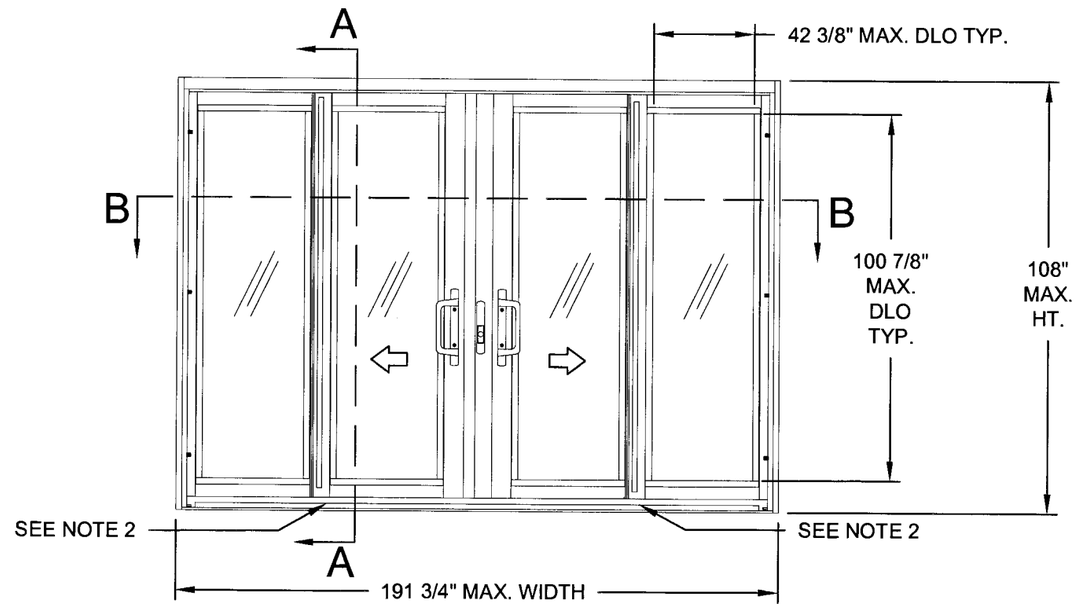

OXXO

NOTES:

1. FOR VERTICAL SECTION DETAILS SEE SHEET 7. FOR HORIZONTAL SECTION DETAILS SEE SHEETS 8 THROUGH 10.
2. FIXED PANEL ANGLE BRACKETS (ITEM 76) LOCATED AT THE HEAD AND SILL OF FIXED PANELS. SEE SHEETS 8 AND 9.
3. DAYLIGHT OPENING (DLO):
   DLO WIDTH = NOM. PANEL WIDTH – 5 5/8"
   DLO HEIGHT = DOOR HEIGHT – 7 1/8"

PRODUCT REVISED as complying with the Florida Building Code
Acceptance No 06-0807.04
Expiration Date 03/13/08
By M Sharbe
Miami Dade Product Control Division

R L Clark
8/13/07

Robert L. Clark, P.E.
PE #39712
Structural

Revsd By:	Date:	Revisions:	
Revsd By:	Date:	Revisions:	
Revsd By: F.K.	Date: 6/1/07	Revisions: G	REDRAWN. CLARIFY SECTIONS & MOVED ANCHORAGE TO SHTS. 11-13
Drawn By: F.K.	Date: 7/30/02	Checked By: J.J.	Date: XX/XX/XX

1070 TECHNOLOGY DRIVE
NOKOMIS, FL 34275

P.O. BOX 1529
NOKOMIS, FL 34274

PGT
Visibly Better

Description: ELEVATIONS

Title: ALUM. SLIDING GLASS DOOR, NON-IMPACT

Series/Model:	Scale:	Sheet:	Drawing No.	Rev:
SGD830	NTS	2 of 13	4392-3	G

NOTES:

1. ANCHOR TYPES: 1 - 5/16" ELCO TAPCON (MIN. EMBEDMENT IN CONCRETE = 1 3/4")
   2 - 1/4" ELCO SS4 CRETE-FLEX (MIN. PENETRATION INTO WOOD = 1 3/8")
   (MIN. EMBEDMENT IN CONCRETE = 1 3/4")
   3 - #12 STEEL (G5) SCREW (MIN. PENETRATION INTO WOOD = 1 3/8")

2. MINIMUM EDGE DISTANCES: CONCRETE OR MASONRY = 1 3/4"
   WOOD STRUCTURE = 1"
   METAL STRUCTURE = 3/4"

3. MINIMUM ON-CENTER SPACING: (AT HEAD = 2.823", AT SILL = 1.947", AT JAMBS = 1.963)

4. ANCHOR SPACING:
   HEAD & SILL: 6" MAX. FROM CORNERS AND 22 1/2" MAX. O.C. QUANTITIES INCLUDE ANCHOR CLUSTERS PLUS ADDITIONAL ANCHORS PER PANEL AS PRESCRIBED IN TABLE, BASED ON SIZE AND GLASS TYPE.

   JAMBS: 6" MAX. FROM CORNERS AND 24" MAX. O.C. AT QUANTITES PRESCRIBED IN TABLE.

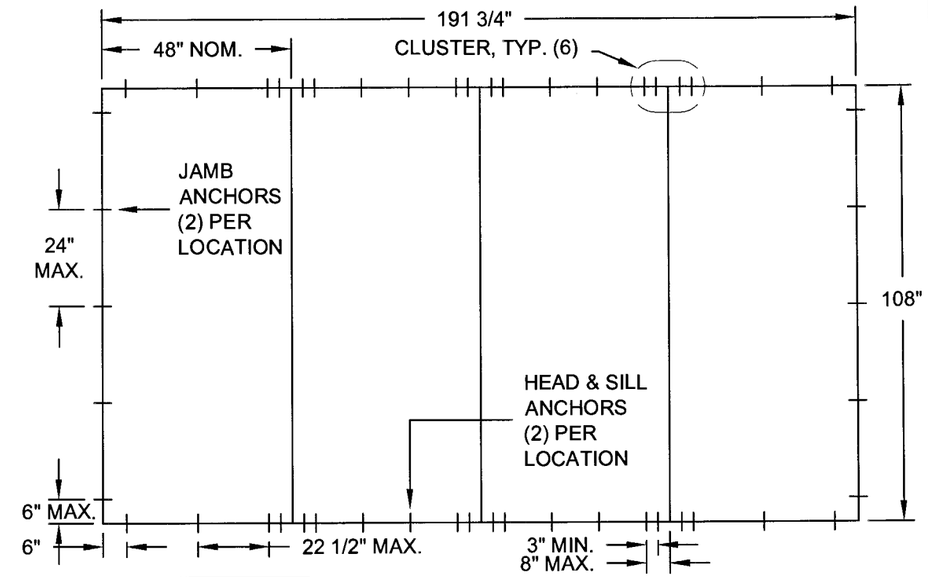

TABLE 1. DESIGN PRESSURES & ANCHORAGE - 3/16" TEMPERED GLASS (GLASS TYPE A), NO REINFORCEMENT

> HEAD & SILL (H & S) INTERLOCK & ASTRAGAL CLUSTER PLUS ANCHOR QUANTITY PER PANEL OUTSIDE CLUSTER
> JAMB ANCHOR QUANTITY

NOM. PANEL WIDTH	FRAME SIDE	DOOR HEIGHT 80" (6^8)			84" (7^0)			90" (7^6)			96" (8^0)			102" (8^6)			108" (9^0)		
ANCHOR TYPE AND SUBSTRATE		1, CONC	2, CONC	2,3, WOOD	1, CONC	2, CONC	2,3, WOOD	1, CONC	2, CONC	2,3, WOOD	1, CONC	2, CONC	2,3, WOOD	1, CONC	2, CONC	2,3, WOOD	1, CONC	2, CONC	2,3, WOOD
>15" <24"		+80 / -180			+80 / -180			+80 / -172.5			+80 / -160.2			PANELS UNDER 24" WIDE NOT AVAILABLE OVER 96" HIGH					
	H & S	C6+2	C6+2	C8+2	C6+2	C8+2	C8+2	C6+2	C8+2	C8+2	C6+2	C8+2	C8+2						
	JAMB	8	8	10	8	8	10	10	10	10	10	10	10						
24" (2^0)		+80 / -180			+80 / -180			+80 / -172.5			+80 / -160.2			+80 / -149.5			+80 / -140.2		
	H & S	C6+2	C8+2	C8+2	C6+2	C8+2	C8+2	C6+2	C8+2	C10+2	C6+2	C8+2	C10+2	C6+2	C8+2	C10+2	C6+2	C8+2	C10+2
	JAMB	8	8	10	8	8	10	10	10	10	10	10	10	10	10	10	10	10	10
30" (2^6)		+80 / -165.5			+80 / -155.9			+80 / -143.5			+80 / -132.8			+80 / -123.7			+80 / -115.7		
	H & S	C6+2	C8+2	C10+2	C6+2	C8+2	C10+2	C6+2	C8+2	C10+2	C6+2	C8+2	C10+2	C6+2	C8+2	C10+2	C6+2	C8+2	C10+2
	JAMB	8	10	10	8	10	10	10	10	10	10	10	10	10	10	10	10	10	10
36" (3^0)		+80 / -142.3			+80 / -135.8			+80 / -124.5			+80 / -114.9			+80 / -106.7			+80 / -99.6		
	H & S	C6+2	C8+4	C10+4	C6+2	C8+4	C10+4	C6+2	C8+2	C10+4	C6+2	C8+2	C10+2	C6+2	C8+2	C10+2	C6+2	C8+2	C10+2
	JAMB	8	10	10	8	10	10	10	10	10	10	10	10	10	10	10	10	10	10
39"		+80 / -121.3			+80 / -121.3			+80 / -117.3			+80 / -108.1			+80 / -100.3			+80 / -93.5		
	H & S	C6+2	C8+4	C8+4	C6+2	C8+4	C8+4	C6+2	C8+4	C10+4	C6+2	C8+2	C10+4	C6+2	C8+2	C10+2	C6+2	C8+2	C10+2
	JAMB	8	8	10	8	10	10	10	10	10	10	10	10	10	10	10	10	10	10
42" (3^6)		+80 / -104.5			+80 / -104.5			+80 / -104.5			+80 / -102.4			+80 / -94.8			+80 / -88.3		
	H & S	C6+2	C6+4	C8+4	C6+2	C8+4	C8+4	C6+2	C8+4	C8+4	C6+2	C8+4	C10+4	C6+2	C8+2	C10+4	C6+2	C8+2	C10+2
	JAMB	8	8	10	8	8	10	10	10	10	10	10	10	10	10	10	10	10	10
45"		+80 / -91			+80 / -91			+80 / -91			+80 / -91			+80 / -90.2			+80 / -83.8		
	H & S	C6+2	C6+4	C6+4	C6+2	C6+4	C8+4	C6+2	C8+4	C8+4	C6+2	C8+4	C8+4	C6+2	C8+4	C10+4	C6+2	C8+2	C10+4
	JAMB	8	8	8	8	8	10	10	10	10	10	10	10	10	10	10	10	10	10
48" (4^0)		+80 / -80			+80 / -80			+80 / -80			+80 / -80			+80 / -80			+80 / -80		
	H & S	C4+2	C6+4	C6+4	C6+2	C6+4	C6+4	C6+2	C6+4	C8+4	C6+2	C8+4	C8+4	C6+2	C8+4	C8+4	C6+2	C8+4	C10+4
	JAMB	8	8	8	8	8	8	10	10	10	10	10	10	10	10	10	10	10	10

ANCHOR EXAMPLE

EXAMPLE OXXO ANCHORAGE

SOLUTION: AN OXXO DOOR WITH 3/16" TEMPERED GLASS, 191 3/4" WIDE (48" WIDE PANELS) X 108" HIGH INSTALLED IN CONCRETE WITH ANCHOR TYPE 2. SEE ENCIRCLED ANCHOR QUANTITIES FROM TABLE 2. C8+4 HEAD AND SILL AND (10) PER JAMB. (3) CLUSTERS OF (8) = (24) PLUS (4) PANELS AT (4) PER PANEL = (16). THEREFORE, THIS DOOR WOULD REQUIRE (40) 1/4" CRETE-FLEX AT THE HEAD AND AT THE SILL, TOTAL (80) AND (10) IN EACH JAMB, TOTAL (20). GRAND TOTAL FOR THIS INSTALLATION = (100) ANCHORS. SEE EXAMPLE ELEVATION ABOVE.

PRODUCT REVISED
as complying with the Florida Building Code
Acceptance No 06-0807.04
Expiration Date 03/13/08
By M Thant
Miami Dade Product Control Division

8/13/07
Robert L. Clark, P.E.
PE #39712
Structural

Revsd By:	Date:	Revisions:	
Revsd By:	Date:	Revisions:	
Revsd By: F.K.	Date: 6/1/07	Revisions: G	REDRAWN. RECONFIG. ANCHORAGE - UNIQUE TABLES BY GLASS TYPE.
Drawn By: F.K.	Date: 7/30/02	Checked By: J.J.	Date: XX/XX/XX

1070 TECHNOLOGY DRIVE
NOKOMIS, FL 34275

P.O. BOX 1529
NOKOMIS, FL 34274

PGT Visibly Better

Description: DPS & ANCHORAGE, 3/16" TEMPERED GLASS

Title: ALUM. SLIDING GLASS DOOR, NON-IMPACT

Series/Model:	Scale:	Sheet:	Drawing No.	Rev:
SGD830	NTS	3 of 13	4392-3	G

NOTES:

1. ANCHOR TYPES: 1 - 5/16" ELCO TAPCON (MIN. EMBEDMENT IN CONCRETE = 1 3/4")
   2 - 1/4" ELCO SS4 CRETE-FLEX (MIN. PENETRATION INTO WOOD = 1 3/8")
   (MIN. EMBEDMENT IN CONCRETE = 1 3/4")
   3 - #12 STEEL (G5) SCREW (MIN. PENETRATION INTO WOOD = 1 3/8")

2. MINIMUM EDGE DISTANCES: CONCRETE OR MASONRY = 1 3/4"
   WOOD STRUCTURE = 1"
   METAL STRUCTURE = 3/4"

3. MINIMUM ON-CENTER SPACING: (AT HEAD = 2.823", AT SILL = 1.947", AT JAMBS = 1.963)

4. ANCHOR SPACING:
   HEAD & SILL: 6" MAX. FROM CORNERS AND 22 1/2" MAX. O.C. QUANTITIES INCLUDE ANCHOR CLUSTERS PLUS ADDITIONAL ANCHORS PER PANEL AS PRESCRIBED IN TABLE, BASED ON SIZE AND GLASS TYPE.

   JAMBS: 6" MAX. FROM CORNERS AND 24" MAX. O.C. AT QUANTITES PRESCRIBED IN TABLE.

TABLE 2. DESIGN PRESSURES & ANCHORAGE - 1/4" TEMPERED GLASS (GLASS TYPE B), NO REINFORCEMENT

> HEAD & SILL (H & S) INTERLOCK & ASTRAGAL CLUSTER PLUS ANCHOR QUANTITY PER PANEL OUTSIDE CLUSTER
> JAMB ANCHOR QUANTITY

NOM. PANEL WIDTH	FRAME SIDE	DOOR HEIGHT 80" (6^8)			84" (7^0)			90" (7^6)			96" (8^0)			102" (8^6)			108" (9^0)		
ANCHOR TYPE AND SUBSTRATE		1, CONC	2, CONC	2,3, WOOD	1, CONC	2, CONC	2,3, WOOD	1, CONC	2, CONC	2,3, WOOD	1, CONC	2, CONC	2,3, WOOD	1, CONC	2, CONC	2,3, WOOD	1, CONC	2, CONC	2,3, WOOD
>15" <24"		+90 / -180			+90 / -180			+90 / -180			+90 / -180			PANELS UNDER 24" WIDE NOT AVAILABLE OVER 96" HIGH					
	H & S	C6+2	C6+2	C8+2	C6+2	C8+2	C8+2	C6+2	C8+2	C8+2	C6+2	C8+2	C8+2						
	JAMB	8	8	10	8	8	10	10	10	10	10	10	10						
24" (2^0)		+90 / -180			+90 / -180			+90 / -180			+90 / -180			+90 / -180			+90 / -178.7		
	H & S	C6+2	C8+2	C8+2	C6+2	C8+2	C8+2	C6+2	C8+2	C10+2	C8+2	C10+2	C10+2	C8+2	C10+2	C10+2	C8+2	C10+2	C12+2
	JAMB	8	8	10	8	8	10	10	10	10	10	10	10	10	10	12	10	10	12
30" (2^6)		+90 / -180			+90 / -180			+90 / -180			+90 / -169.4			+90 / -157.7			+90 / -147.5		
	H & S	C8+2	C10+2	C10+4	C8+2	C10+2	C10+4	C8+2	C10+2	C12+4	C8+2	C10+2	C12+2	C8+2	C10+2	C12+2	C8+2	C10+2	C12+2
	JAMB	8	10	12	8	10	12	10	12	12	10	12	12	10	12	12	10	12	12
36" (3^0)		+90 / -180			+90 / -173.2			+90 / -158.7			+90 / -146.5			+90 / -136.1			+90 / -127		
	H & S	C8+4	C10+4	C12+4	C8+2	C10+4	C12+4	C8+2	C10+4	C12+4	C8+2	C10+4	C12+4	C8+2	C10+4	C12+4	C8+2	C10+2	C12+4
	JAMB	10	12	14	10	12	14	10	12	14	10	12	12	10	12	12	10	12	12
39"		+90 / -154.6			+90 / -154.6			+90 / -149.6			+90 / -137.9			+90 / -127.9			+90 / -119.2		
	H & S	C8+4	C10+4	C10+4	C8+4	C10+4	C10+4	C8+2	C10+4	C12+4	C8+2	C10+4	C12+4	C8+2	C10+4	C12+4	C8+2	C10+4	C12+4
	JAMB	8	12	12	10	12	12	10	12	14	10	12	14	10	12	12	10	12	12
42" (3^6)		+90 / -133.3			+90 / -133.3			+90 / -133.3			+90 / -130.6			+90 / -120.9			+90 / -112.6		
	H & S	C6+4	C8+4	C10+4	C8+4	C10+4	C10+4	C8+4	C10+4	C10+4	C8+4	C10+4	C12+4	C8+2	C10+4	C12+4	C8+2	C10+4	C12+4
	JAMB	8	10	12	8	10	12	10	12	12	10	12	14	10	12	14	10	12	12
45"		+90 / -116.1			+90 / -116.1			+90 / -116.1			+90 / -116.1			+90 / -115			+90 / -106.9		
	H & S	C6+4	C8+4	C8+4	C6+4	C8+4	C10+4	C8+4	C10+4	C10+4	C8+4	C10+4	C10+4	C8+4	C10+4	C12+4	C8+2	C10+4	C12+4
	JAMB	8	10	10	8	10	12	10	10	12	10	12	12	10	12	14	10	12	14
48" (4^0)		+90 / -102			+90 / -102			+90 / -102			+90 / -102			+90 / -102			+90 / -102		
	H & S	C6+4	C8+4	C8+4	C6+4	C8+4	C8+4	C6+4	C8+4	C10+4	C8+4	C10+4	C10+4	C8+4	C10+4	C10+4	C8+4	C10+4	C12+4
	JAMB	8	10	10	8	10	10	10	10	12	10	10	12	10	12	12	10	12	14

PRODUCT REVISED
to comply with the Florida Building Code
Acceptance No. 06-0807.04
Expiration Date 03/13/2008
By [signature]
Miami Dade Product Control Division

[signature]
8/13/07
Robert L. Clark, P.E.
PE #39712
Structural

Revsd By:	Date:	Revisions:	
Revsd By:	Date:	Revisions:	
Revsd By: F.K.	Date: 6/1/07	Revisions: G	REDRAWN. RECONFIG. ANCHORAGE - UNIQUE TABLES BY GLASS TYPE.
Drawn By: F.K.	Date: 7/30/02	Checked By: J.J.	Date: XX/XX/XX

1070 TECHNOLOGY DRIVE
NOKOMIS, FL 34275

P.O. BOX 1529
NOKOMIS, FL 34274

PGT
Visibly Better

Description: DPS & ANCHORAGE, 1/4" TEMPERED GLASS

Title: ALUM. SLIDING GLASS DOOR, NON-IMPACT

Series/Model:	Scale:	Sheet:	Drawing No.	Rev:
SGD830	NTS	4 of 13	4392-3	G

NOTES:

1. ANCHOR TYPES: 1 - 5/16" ELCO TAPCON (MIN. EMBEDMENT IN CONCRETE = 1 3/4")
   2 - 1/4" ELCO SS4 CRETE-FLEX (MIN. PENETRATION INTO WOOD = 1 3/8")
   (MIN. EMBEDMENT IN CONCRETE = 1 3/4")
   3 - #12 STEEL (G5) SCREW (MIN. PENETRATION INTO WOOD = 1 3/8")

2. MINIMUM EDGE DISTANCES: CONCRETE OR MASONRY = 1 3/4"
   WOOD STRUCTURE = 1"
   METAL STRUCTURE = 3/4"

3. MINIMUM ON-CENTER SPACING: (AT HEAD = 2.823", AT SILL = 1.947", AT JAMBS = 1.963)

4. ANCHOR SPACING:
   HEAD & SILL: 6" MAX. FROM CORNERS AND 22 1/2" MAX. O.C. QUANTITIES INCLUDE ANCHOR CLUSTERS PLUS ADDITIONAL ANCHORS PER PANEL AS PRESCRIBED IN TABLE, BASED ON SIZE AND GLASS TYPE.

   JAMBS: 6" MAX. FROM CORNERS AND 24" MAX. O.C. AT QUANTITES PRESCRIBED IN TABLE.

5. 1/2" X 1 1/2" ALUMINUM REINFORCEMENTS REQUIRED AT ASTRAGAL AND INTERLOCK STILES WITH GLASS OPTION C. SEE HORIZONTAL SECTION DETAILS SHEETS 9 AND 10.

TABLE 3. DESIGN PRESSURES & ANCHORAGE - 3/8" TEMPERED GLASS (GLASS TYPE C), REINFORCEMENT REQUIRED

> HEAD & SILL (H & S) INTERLOCK & ASTRAGAL CLUSTER PLUS ANCHOR QUANTITY PER PANEL OUTSIDE CLUSTER
> JAMB ANCHOR QUANTITY

NOM. PANEL WIDTH	FRAME SIDE	DOOR HEIGHT																	
	ANCHOR TYPE AND SUBSTRATE	80" (6^8)			84" (7^0)			90" (7^6)			96" (8^0)			102" (8^6)			108" (9^0)		
		1, CONC	2, CONC	2,3, WOOD	1, CONC	2, CONC	2,3, WOOD	1, CONC	2, CONC	2,3, WOOD	1, CONC	2, CONC	2,3, WOOD	1, CONC	2, CONC	2,3, WOOD	1, CONC	2, CONC	2,3, WOOD
>15" <24"		+90 / -180			+90 / -180			+90 / -180			+90 / -180			PANELS UNDER 24" WIDE NOT AVAILABLE OVER 96" HIGH					
	H & S	C6+2	C6+2	C8+2	C6+2	C8+2	C8+2	C6+2	C8+2	C8+2	C6+2	C8+2	C8+2						
	JAMB	8	8	10	8	8	10	10	10	10	10	10	10						
24" (2^0)		+90 / -180			+90 / -180			+90 / -180			+90 / -180			+90 / -180			+90 / -180		
	H & S	C6+2	C8+2	C8+2	C6+2	C8+2	C8+2	C6+2	C8+2	C10+2	C8+2	C10+2	C10+2	C8+2	C10+2	C10+2	C8+2	C10+2	C12+2
	JAMB	8	8	10	8	8	10	10	10	10	10	10	10	10	10	12	10	10	12
30" (2^6)		+90 / -180			+90 / -180			+90 / -180			+90 / -180			+90 / -180			+90 / -180		
	H & S	C8+2	C10+2	C10+4	C8+2	C10+2	C10+4	C8+2	C10+2	C12+4	C8+2	C12+2	C12+4	C10+2	C12+2	C12+4	C10+2	C12+2	C14+4
	JAMB	8	10	12	8	10	12	10	12	12	10	12	14	10	12	14	10	14	14
36" (3^0)		+90 / -180			+90 / -180			+90 / -180			+90 / -180			+90 / -180			+90 / -174.3		
	H & S	C8+4	C10+4	C12+4	C8+4	C10+4	C12+4	C10+4	C12+4	C12+4	C10+4	C12+4	C14+4	C10+4	C14+4	C14+4	C10+2	C14+4	C16+4
	JAMB	10	12	14	10	12	14	10	14	14	10	14	16	12	14	16	12	16	16
39"		+90 / -180			+90 / -180			+90 / -180			+90 / -180			+90 / -175.5			+90 / -163.6		
	H & S	C8+4	C10+4	C12+4	C8+4	C12+4	C12+4	C10+4	C12+4	C14+4	C10+4	C14+4	C14+4	C10+4	C14+4	C16+4	C10+4	C14+4	C16+4
	JAMB	10	12	14	10	14	14	12	14	16	12	16	16	12	16	18	12	16	18
42" (3^6)		+90 / -180			+90 / -180			+90 / -180			+90 / -179.2			+90 / -166			+90 / -154.5		
	H & S	C8+4	C12+4	C12+6	C10+4	C12+4	C14+6	C10+4	C14+4	C14+6	C10+4	C14+4	C16+4	C10+4	C14+4	C16+4	C10+4	C14+4	C16+4
	JAMB	10	14	16	12	14	16	12	16	16	12	16	18	12	16	18	12	16	18
45"		+90 / -159.3			+90 / -159.3			+90 / -159.3			+90 / -159.3			+90 / -157.8			+90 / -146.7		
	H & S	C8+4	C10+4	C12+6	C8+4	C12+4	C12+6	C10+4	C12+4	C14+6	C10+4	C14+4	C14+6	C10+4	C14+4	C16+6	C10+4	C14+4	C16+4
	JAMB	10	14	14	10	14	16	12	14	16	12	16	18	12	16	18	12	16	18
48" (4^0)		+90 / -140			+90 / -140			+90 / -140			+90 / -140			+90 / -140			+90 / -140		
	H & S	C8+4	C10+4	C10+6	C8+4	C10+4	C12+6	C8+4	C12+4	C12+6	C10+4	C12+4	C14+6	C10+4	C14+4	C14+6	C10+4	C14+4	C16+6
	JAMB	10	12	14	10	12	14	10	14	16	12	14	16	12	16	18	12	16	18

PRODUCT REVISED
as complying with the Florida Building Code
Acceptance No 06-0807.04
Expiration Date 03/13/08
By: M. Thrash
Manufactured Product Control Division

Revsd By:	Date:	Revisions:	
Revsd By:	Date:	Revisions:	
Revsd By: F.K.	Date: 6/1/07	Revisions: G	REDRAWN. RECONFIG. ANCHORAGE - UNIQUE TABLES BY GLASS TYPE.
Drawn By: F.K.	Date: 7/30/02	Checked By: J.J.	Date: XX/XX/XX

1070 TECHNOLOGY DRIVE
NOKOMIS, FL 34275

P.O. BOX 1529
NOKOMIS, FL 34274

PGT
Visibly Better

Description: DPS & ANCHORAGE, 3/8" TEMPERED GLASS

Title: ALUM. SLIDING GLASS DOOR, NON-IMPACT

Series/Model:	Scale:	Sheet:	Drawing No.	Rev:
SGD830	NTS	5 of 13	4392-3	G

8/15/07

Robert L. Clark, P.E.
PE #39712
Structural

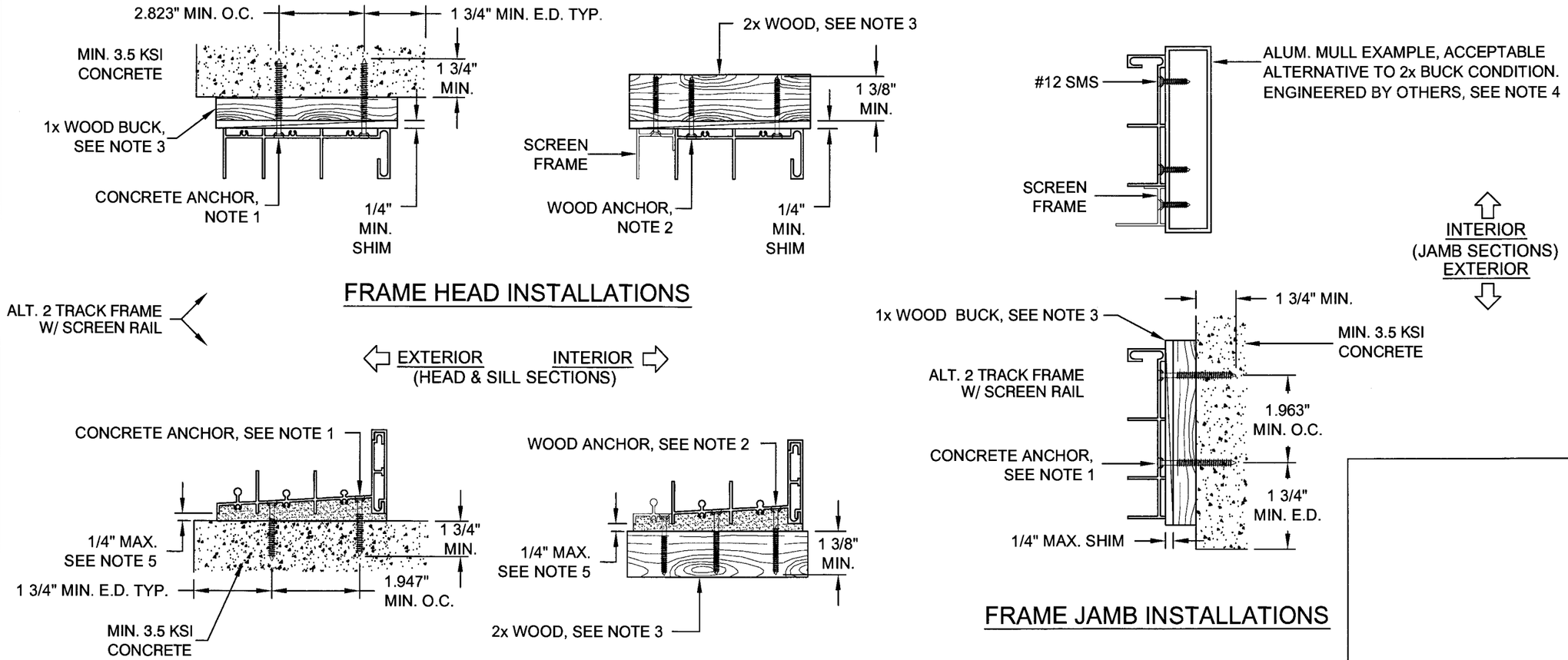

NOTES:

1. FOR CONCRETE APPLICATIONS IN MIAMI-DADE COUNTY, USE ONLY MIAMI-DADE COUNTY APPROVED ELCO 5/16" TAPCONS OR ELCO 1/4" SS4 CRETE-FLEX CONCRETE ANCHORS. FLAT HEADS TO BE #12 TRIMFIT TYPE.

2. FOR WOOD APPLICATIONS USE #12 STEEL SCREWS (G5) OR ELCO 1/4" SS4 CRETE-FLEX ANCHORS WITH #12 TRIMFIT HEADS.

3. WOOD BUCKS DEPICTED AS 1x ARE LESS THAN 1 1/2" THICK. 1x WOOD BUCKS ARE OPTIONAL IF UNIT IS INSTALLED DIRECTLY TO SOLID CONCRETE. WOOD BUCKS DEPICTED AS 2x ARE 1 1/2" THICK OR GREATER. INSTALLATION TO THE SUBSTRATE OF WOOD BUCKS TO BE ENGINEERED BY OTHERS OR AS APPROVED BY THE AUTHORITY HAVING JURISDICTION (AHJ).

4. FOR ATTACHMENT TO ALUMINUM: THE ALUMINUM SHALL BE A MINIMUM STRENGTH OF 6063-T5 AND A MINIMUM OF 1/8" THICK. THE ALUMINUM STRUCTURAL MEMBER SHALL BE OF A SIZE TO PROVIDE FULL SUPPORT TO THE DOOR FRAME SIMILAR TO THAT SHOWN IN THE DETAILS FOR 2x WOOD BUCKS. THE ANCHORS SHALL BE #12 SHEET METAL SCREWS (G5), WITH FULL THREAD ENGAGEMENT INTO THE ALUMINUM. IF THESE CRITERIA ARE MET, THE ANCHORAGE SHOWN FOR #12 SCREWS MAY BE USED.

5. IF SILL IS TIGHT TO SUBSTRATE, GROUT OR OTHER MATERIAL IS NOT REQUIRED. IF USED, NON-METALLIC GROUT, 3500 PSI MIN., (DONE BY OTHERS) MUST FULLY SUPPORT THE ENTIRE LENGTH OF THE SILL THAT IS NOT TIGHT TO THE SUBSTRATE, AND TRANSFER SHEAR LOAD TO SUBSTRATE.

PRODUCT REVIEWED as complying with the Florida Building Code
Acceptance No. 06-0807.04
Expiration Date 02/12/08
By M. Clark
Miami-Dade Product Control Division

Revsd By:	Date:	Revisions:	
Revsd By:	Date:	Revisions:	
Revsd By: F.K.	Date: 6/1/07	Revisions: G	REDRAWN. CLARIFY O.C. & E.D. UPDATE NOTES.
Drawn By: F.K.	Date: 7/30/02	Checked By: J.J.	Date: XX/XX/XX

1070 TECHNOLOGY DRIVE
NOKOMIS, FL 34275
P.O. BOX 1529
NOKOMIS, FL 34274

PGT Visibly Better

Description: ANCHORAGE DETAILS

Title: ALUM. SLIDING GLASS DOOR, NON-IMPACT

Series/Model:	Scale:	Sheet:	Drawing No.	Rev:
SGD830	1/4x	6 of 13	4392-3	G

8/13/07
Robert L. Clark, P.E.
PE #39712
Structural

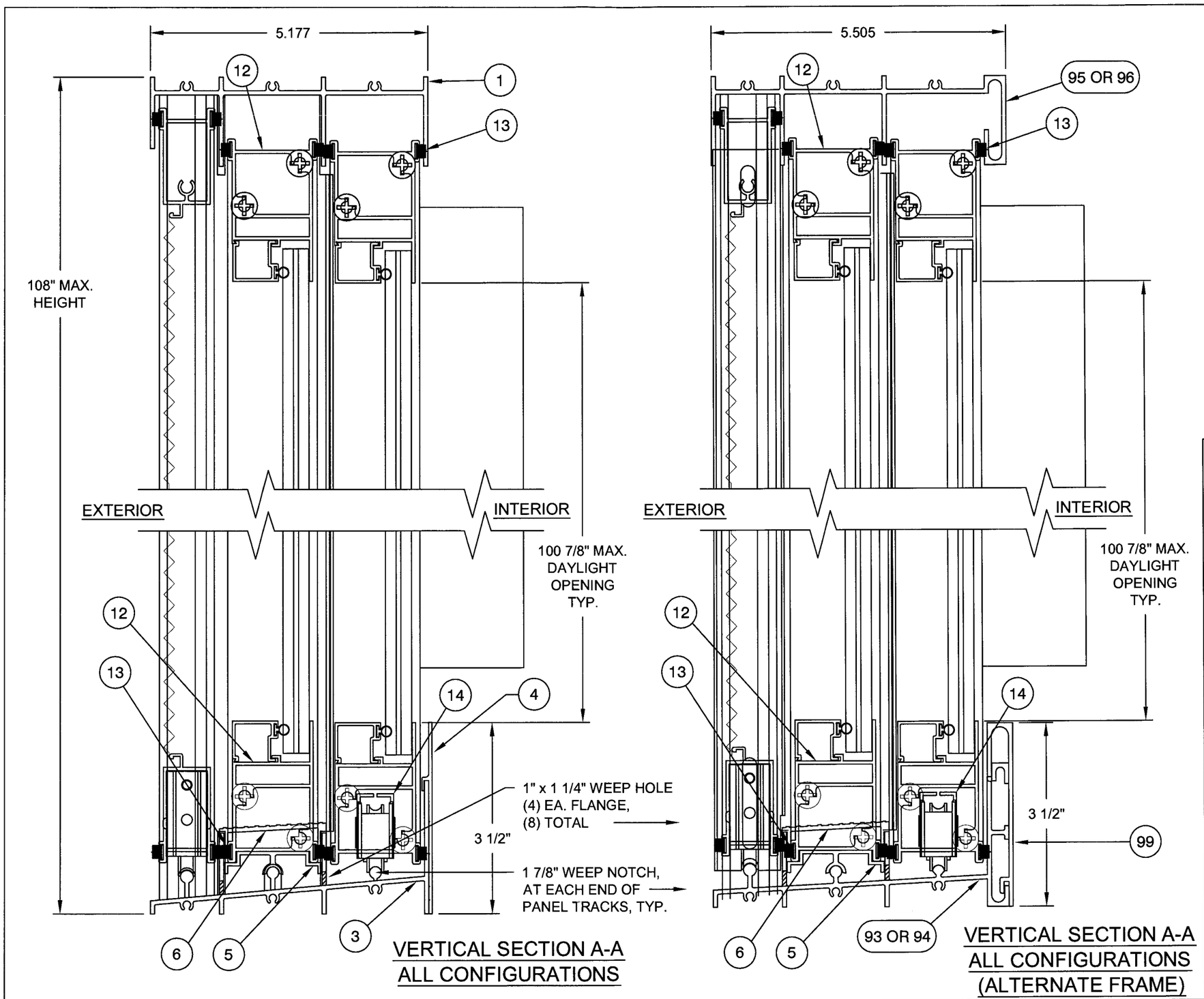

VERTICAL SECTION A-A
ALL CONFIGURATIONS

VERTICAL SECTION A-A
ALL CONFIGURATIONS
(ALTERNATE FRAME)

PRODUCT ISSUED
as complying with the Florida
Building Code
Acceptance No. 06-0807.04
Expiration Date 03/13/08
By [signature]
Miami Dade Product Control
Division

Revsd By:	Date:	Revisions:	
Revsd By:	Date:	Revisions:	
Revsd By: F.K.	Date: 6/1/07	Revisions: G	REDRAWN, CONSOLIDATE VERTICAL SECTIONS
Drawn By: F.K.	Date: 7/30/02	Checked By: J.J.	Date: XX/XX/XX

1070 TECHNOLOGY DRIVE
NOKOMIS, FL 34275

P.O. BOX 1529
NOKOMIS, FL 34274

PGT
Visibly Better

Description: VERTICAL SECTIONS

Title: ALUM. SLIDING GLASS DOOR, NON-IMPACT

Series/Model:	Scale:	Sheet:	Drawing No.	Rev:
SGD830	1/2x	7 of 13	4392-3	G

[signature] 8/13/07

Robert L. Clark, P.E.
PE #39712
Structural

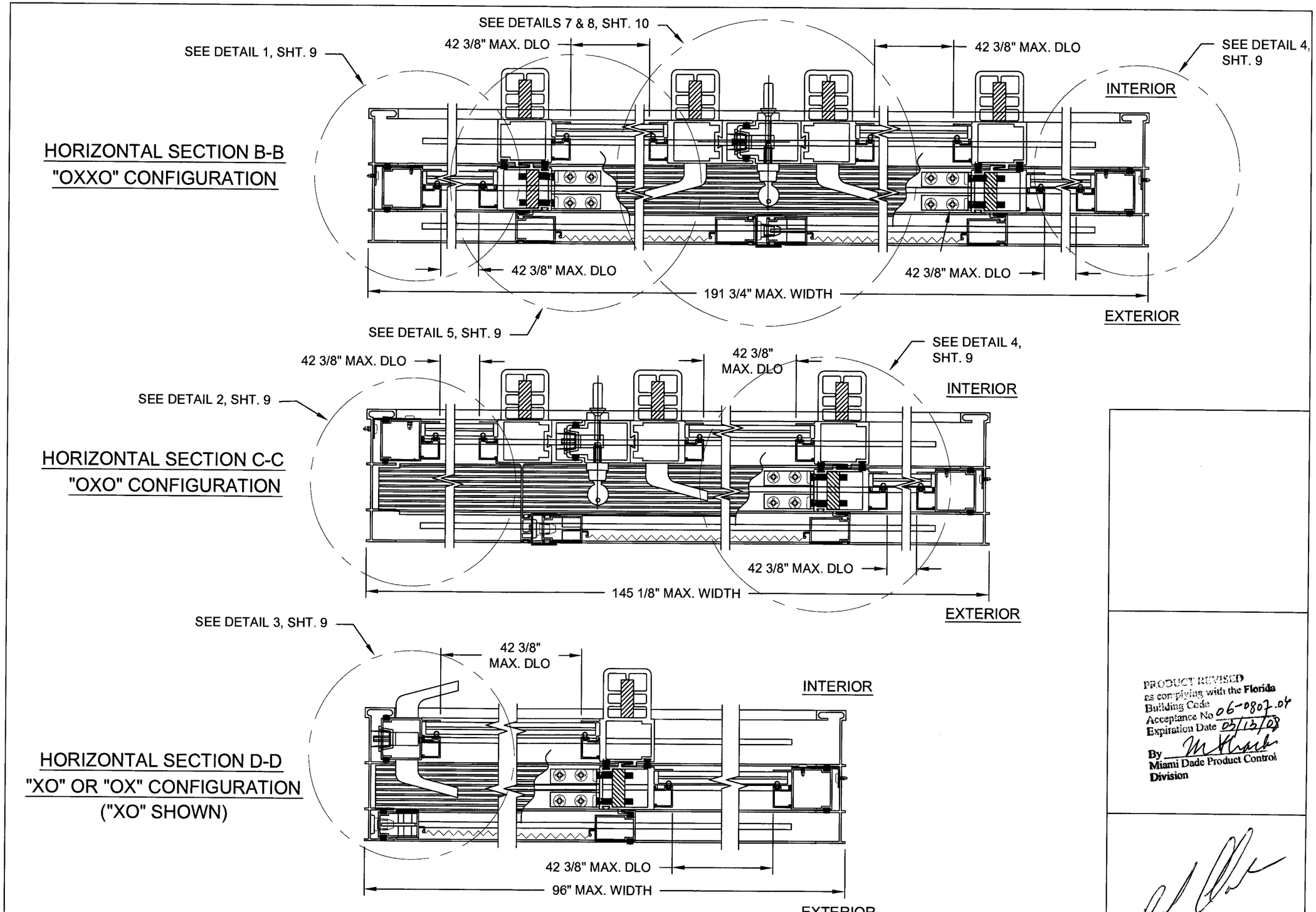

PRODUCT REVISED as complying with the Florida Building Code Acceptance No 06-0807.04 Expiration Date 03/13/08 By M Clark Miami Dade Product Control Division

Revsd By:	Date:	Revisions:	
Revsd By:	Date:	Revisions:	
Revsd By: F.K.	Date: 6/1/07	Revisions: G	NEW SHEET, FOR CLARITY SHOW HORIZONTAL CONFIGS. & ADD DETAIL REF.
Drawn By: F.K.	Date: 7/30/02	Checked By: J.J.	Date: XX/XX/XX

1070 TECHNOLOGY DRIVE
NOKOMIS, FL 34275

P.O. BOX 1529
NOKOMIS, FL 34274

PGT
Visibly Better

Description: HORIZONTAL SECTION CONFIGURATIONS

Title: ALUM. SLIDING GLASS DOOR, NON-IMPACT

Series/Model:	Scale:	Sheet:	Drawing No.	Rev:
SGD830	1/4x	8 of 13	4392-3	G

8/13/07

Robert L. Clark, P.E.
PE #39712
Structural

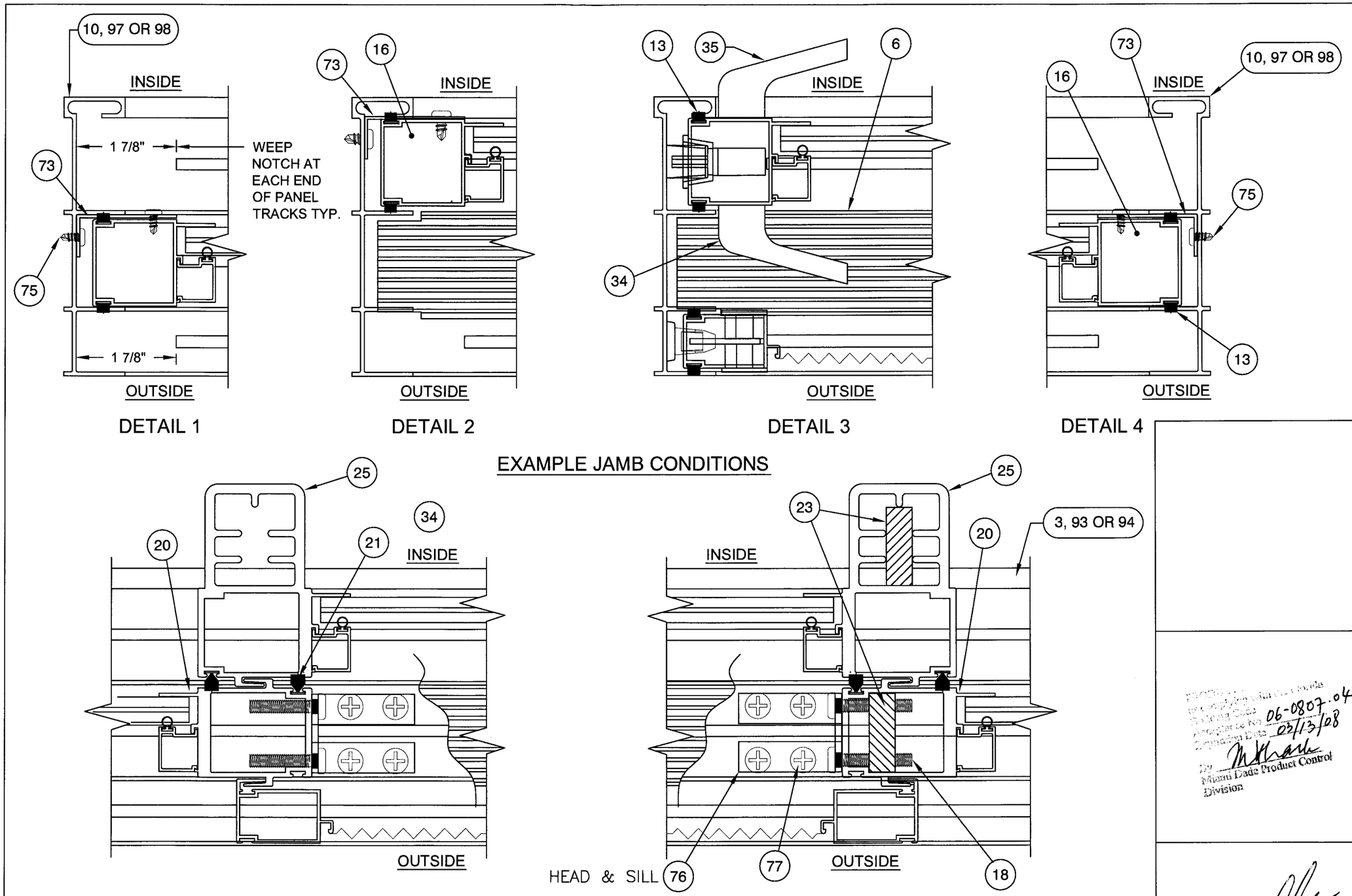

Revsd By:	Date:	Revisions:	
Revsd By:	Date:	Revisions:	
Revsd By: F.K.	Date: 6/1/07	Revisions: G	NEW SHEET, FOR CLARITY SHOW HORIZ. SECTIONS W/ & W/O REINFMENT.
Drawn By: F.K.	Date: 7/30/02	Checked By: J.J.	Date: XX/XX/XX

1070 TECHNOLOGY DRIVE
NOKOMIS, FL 34275

P.O. BOX 1529
NOKOMIS, FL 34274

PGT
Visibly Better

Description: HORIZONTAL SECTION DETAILS

Title: ALUM. SLIDING GLASS DOOR, NON-IMPACT

Series/Model:	Scale:	Sheet:	Drawing No.	Rev:
SGD830	1/2x	9 of 13	4392-3	G

PRODUCT ... Building Code ... Acceptance No. 06-0807.04 Expiration Date 03/13/08 By M Clark Miami Dade Product Control Division

8/13/07

Robert L. Clark, P.E.
PE #39712
Structural

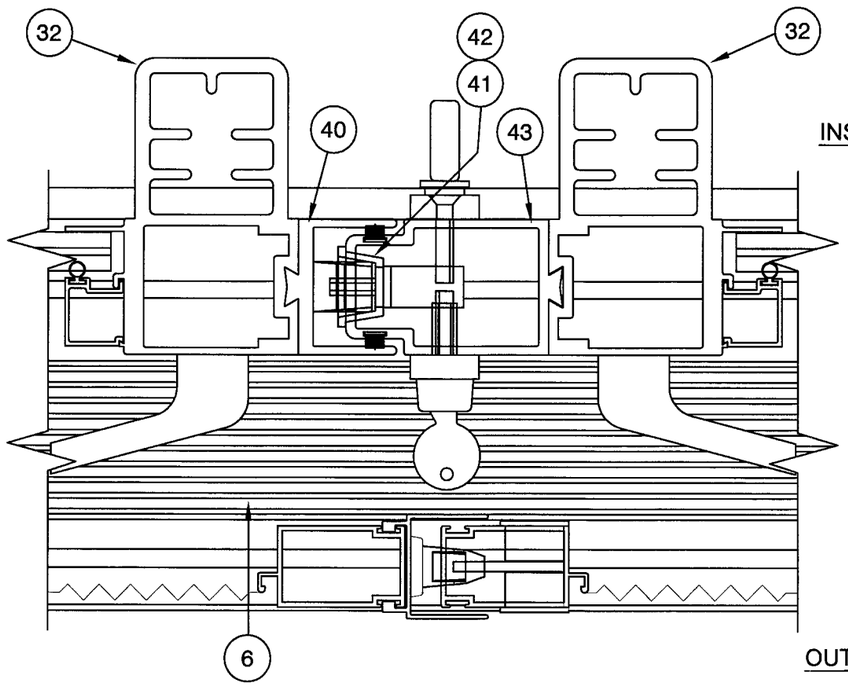

INSIDE

OUTSIDE

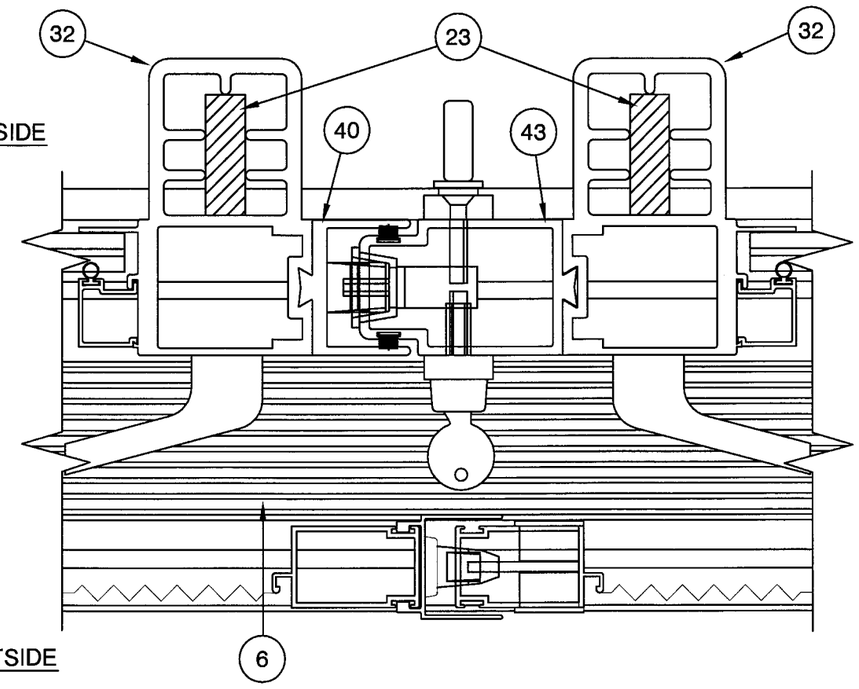

DETAIL 7
EXAMPLE ASTRAGAL UNREINFORCED CONDITION
(SEE SHTS. 3 & 4)

DETAIL 8
EXAMPLE ASTRAGAL REINFORCED CONDITION
(SEE SHT. 5)

PRODUCT ...
as complying with the Florida Building Code
Acceptance No 06-0807.04
Expiration Date 03/13/08
By MHarke
Miami Dade Product Control Division

Revsd By:	Date:	Revisions:	
Revsd By:	Date:	Revisions:	
Revsd By: F.K.	Date: 6/1/07	Revisions: G	NEW SHEET, SHOW HORIZONTAL ASTRAGAL SECT. W/ & W/O REINFORCMT.
Drawn By: F.K.	Date: 7/30/02	Checked By: J.J.	Date: XX/XX/XX

1070 TECHNOLOGY DRIVE
NOKOMIS, FL 34275

P.O. BOX 1529
NOKOMIS, FL 34274

PGT
Visibly Better

Description: HORIZONTAL SECTION DETAILS

Title: ALUM. SLIDING GLASS DOOR, NON-IMPACT

Series/Model:	Scale:	Sheet:	Drawing No.	Rev:
SGD830	1/2x	10 of 13	4392-3	G

R L Clark
8/13/07

Robert L. Clark, P.E.
PE #39712
Structural

MK.	DWG	PGT#	DESCRIPTION	OXXO QTY	OXO QTY	OX XO QTY
1	4302B	612245	FRAME HEAD	1	1	1
2	4386	7P4386	SILL/HEAD WEATHER STRIPPING PAD	1 AT CENTER	1 AT CENTER	1 AT CENTER
3	4303A	64303	FRAME SILL	1	1	1
4	4361	64361	3.500 SILL ADD ON	1	1	1
5	4314	612254	ADAPTER, FIXED PANEL	2	2	1
6	4315	64315	THRESHOLD COVER	1	1	1
7	4385	71164	HEAVY DUTY 4 HOLE BUMP STOP	4	4	2
8		78x38PPTX	#8 X 3/8 LG. PH. P. HEAD TEK S. STL.	4 / STOP	4 / STOP	4 / STOP
9	4386	7P4386	SILL/HEAD WEATHER STRIPPING PAD	1 AT CENTER	1 AT CENTER	1 AT CENTER
10	4304	612247	FRAME JAMB	2	2	2
11	1155-1	781PQX	#8 X 1" LG. S. STL. QUAD P. HEAD	6 / JAMB	6 / JAMB	6 / JAMB
12	4305A	64305	TOP AND BOTTOM RAIL	2 / PANEL	2 / PANEL	2 / PANEL
13	1235	67S16G	WSTP .170 X .270 BACK, FIN SEAL	2 / RAIL	2 / RAIL	2 / RAIL
14	1050	71050X	TANDEM ROLLER S. STL.	2 / O/ PANEL	2 / O/ PANEL	2 / O/ PANEL
11	1155-1	781PQX	#8 X 1" LG. S. STL. QUAD P.HEAD	2 / ROLLER	2 / ROLLER	2 / ROLLER
16	4306	612249	LOCK STILE	2	2	2
13	1235	67S16G	WSTP .170 X .270 BACK, FIN SEAL	2 / SIDE RAIL	2 / SIDE RAIL	2 / SIDE RAIL
18		720X112X	1/4-20 X 1.50 PH. P. HEAD S. STL.	4 / Side Rail	4 / SIDE RAILI	4 / SIDE RAIL
19	4389	44389	LOCKSTYLE END PLUG	2 / SIDE RAIL	2 / SIDE RAIL	2 / SIDE RAIL
20	4383	64383	FIXED DOUBLE INTERLOCK	2	1	1
21	4393	67393G	WSTP .400 X .270 BACK, FIN SEAL	2	2	2
18		720X112X	1/4-20 X 1.50 PH. PN. S. STL.	4 / FXD DBL INTLK	4 / FXD DBL INTLK	4 / FXD DBL INTLK
23	4357	64357M	ALUM. REINF. .500 X 1.500	1 / FXD DBL INTLK	1 / FXD DBL INTLK	1 / FXD DBL INTLK
24	4388	44388	MOVING/FIXED INTERLOCK END PLUG	2 / FXD DBL INTLK	2 / FXD DBL INTLK	2 / FXD DBL INTLK
25	4382	64382	MOVING INTERLOCK	2	1	1
21	4393	67393G	WSTP .400 X .270 BACK, FIN SEAL	1	1	1
18		720X112X	1/4-20 X 1.50 PH. PN. S. STL.	0	0	4 / MVG INTLK
23	4357	64357M	ALUM. REINF. .500 X 1.500	1 / MVG INTLK	1 / MVG INTLK	1 / MVG INTLK
24	4388	44388	MOVING/FIXED INTERLOCK END PLUG	2 / MVG INTLK	2 / MVG INTLK	2 / MVG INTLK
30	4392	7XX1MD(BSW)	TOP STICKER COVER	1 / MVG INTLK	1 / MVG INTLK	1 / MVG INTLK
30	4392	7XX2MD(BSW)	BOTTOM STICKER COVER	1 / MVG INTLK	1 / MVG INTLK	1 / MVG INTLK
32	4379	64379	ASTRAGAL BASE	2	2	0
33	1180	71420x114 SH	1/4-20 X 1.25 LG. SHCS S. STL.	4 / ASTRA BASE	4 / ASTRA BASE	0
23	4357	64357M	ALUM. REINF. .500 X 1.500	1 / ASTRA BASE	1 / ASTRA BASE	0
34			TRUTH EXTERIOR PULL HANDLE	1	1	1
35			TRUTH INTERIOR PULL HANDLE	0	0	1
36	4387	44387	ASTRAGAL BASE END PLUG	2 / ASTRA BASE	2 / ASTRA BASE	0
30	4392	7XX1MD(BSW)	TOP STICKER COVER	1 / MVG INTLK	1 / ASTRA BASE	0
30	4392	7XX2MD(BSW)	BOTTOM STICKER COVER	1 / MVG INTLK	1 / ASTRA BASE	0
39		71032INSERT	10-32 ALUMIN THREADED INSERT	2 / ASTRA BASE	2 / ASTRA BASE	0
40	4380	64380	FEMALE ADD-ON	1	1	0
41	4372	22507MLK	MORTISE LOCK KEEPER, SURFACE MTG	1	1	0
42			#8 X 3/4" LG. PH PAN HEAD S. STL	2	2	0
43	4381	64381	MALE ADD-ON	1	1	0
21	4393	67393G	WSTP .400 X .270 BACK, FIN SEAL	2 /	2	0
45	1048	71048	ROLLER ADJ. PLUG 1/2 HOLE PLUG	2 / O/ PANEL	2 / O/ PANEL	0
47	1040-1		MORTISE LOCK, SURFACE MTG., 3 PLY HOOK, INT. THUMB KEY OPERATOR	1	1	0
48		7632x25FPX	#6-32 X 1/4" LG. PH FH S. STL.	2	2	0
49	4372-2	72260MLRA	MORTICE LOCK RECESS ADAPT.	1	1	0
50		71032x1FPFX	#10-32 X 1" LG. PH FH S. STL.	2	2	0
54			3/16 TEMPERED GLASS	4	3	2
55			1/4 TEMPERED GLASS	4	3	2
56			3/8 TEMPERED GLASS	4	3	2
57			SILICONE DOW 899, 995 OR EQUIV.	A/R	A/R	A/R
58	4323	612260	GLAZING BEAD 3/16" OR 1/4" GLASS	4/PANEL	4/PANEL	4/PANEL
59	4394	64394	GLAZING BEAD 3/8" GLASS	4/PANEL	4/PANEL	4/PANEL
63	1224	TP-247	VINYL BULB WEATHERSTRIP	8 PIECES	8 PIECES	1 / BEAD PC

MK.	DWG	PGT#	DESCRIPTION	OXXO QTY	OXO QTY	OX XO QTY
73	4362-1	4362B	PANEL FIXING CLIP .800 x 1.935 x .060 .800 x 1.935 x 1.500 LG. .060 AL. ANGLE	6	6	3
75			#8 X 1/2" LG. PH PH S. STL	12	12	6
76	4356	74356A	FIXED PANEL ANGLE BRACKET 2.500 x 2.000 x 1.500 LG .125 AL. ANGLE	4	2	2
77			#10 X 3/4 LG. PH PH S. STL	16	8	8
80	4317	612256	SCREEN FRAME TOP RAIL	2	2	1
81	4318	612257	SCREEN FRAME BOT. RAIL	2	2	1
82	4319	612258	SCREEN FRAME SIDE RAIL	2	2	2
83		7LOCK	LOCKSET, SCREEN	2	2	2
84	4341	7X1720X	P-CAM LATCH	1	1	1
85	4320	612259	SCREEN FRAME MEETING RAIL	2	2	2
86	4344	64344	SCREEN ASTRAGAL	1	1	0
87	653	7SDKEEP	JAMB KEEPER	1	1	0
88	4384	64384	SCREEN ASTRAGAL ADAPTER	0	1	0
89			SCHNEE-MOOREHEAD NARROW JOINT SEALANT (USED TO SEAL PANEL CORNERS)			
90	4424	64424	SCREEN, 1 TRACK FRAME SILL	USE WITH ALTERNATE SILL, ITEM 93		
91	4425	64425	SCREEN, 1 TRACK FRAME HEAD	USE WITH ALTERNATE HEAD, ITEM 95		
92	4426	64426	SCREEN, 1 TRACK FRAME JAMB	USE WITH ALTERNATE JAMB, ITEM 97		
93	4409	64409	FRAME, 2 TRACK SILL	1	1	1
94	4442	64442	FRAME, 2 TRACK SILL / W SCREEN RAIL	1	1	1
95	4414	64414	FRAME, 2 TRACK HEAD	1	1	1
96	4441	64441	FRAME, 2 TRACK HEAD /W SCREEN RAIL	1	1	1
97	4417	64417	FRAME, 2 TRACK JAMB	1	1	1
98	4443	64443	FRAME, 2 TRACK JAMB W/ SCREEN RAIL	1	1	1
99	4411	64411	3.500 SILL RISER	1	1	1

PROD...
as complyin... ...ida
Building Code
Acceptance No 06-0807.04
Expiration Date 03/13/08
By M Thaler
Miami Dade Product Control Division

8/13/07
Robert L. Clark, P.E.
PE #39712
Structural

Revsd By:	Date:	Revisions:	
Revsd By:	Date:	Revisions:	
Revsd By: F.K.	Date: 6/1/07	Revisions: G	REDRAWN, NO CHANGE TO PARTS LIST. MOVE GLAZING DETAILS TO SHT 1
Drawn By: F.K.	Date: 7/30/02	Checked By: J.J.	Date: XX/XX/XX

1070 TECHNOLOGY DRIVE
NOKOMIS, FL 34275

P.O. BOX 1529
NOKOMIS, FL 34274

PGT
Visibly Better

Description: PARTS LIST

Title: ALUM. SLIDING GLASS DOOR, NON-IMPACT

Series/Model:	Scale:	Sheet:	Drawing No.	Rev:
SGD830	NTS	11 of 13	4392-3	G

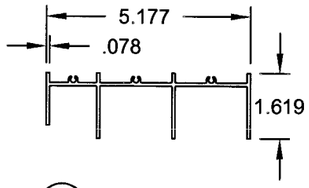

1 FRAME HEAD
MAT'L: 6063-T5
DWG# 4302B

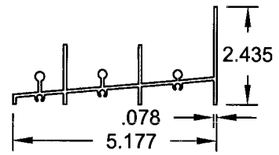

3 FRAME SILL
MAT'L: 6063-T5
DWG# 4303A

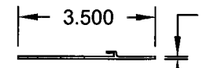

4 ADD ON SILL
MAT'L: 6063HS-T54
DWG# 4361

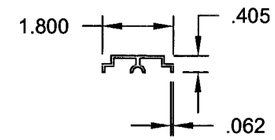

5 ADAPTER, FIXED PANEL
MAT'L: 6063-T5
DWG# 4314

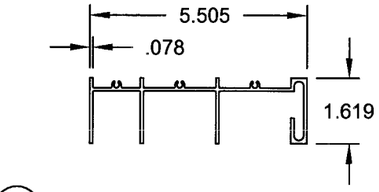

96 FRAME, 2 TRACK HEAD W/ SCREEN RAIL
MAT'L: 6063-T6
DWG# 4441

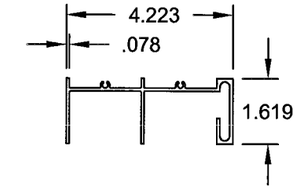

95 FRAME, 2 TRACK HEAD
MAT'L: 6063-T6
DWG# 4414

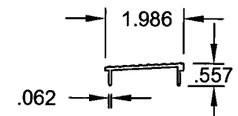

6 THRESHOLD COVER
MAT'L: 6063-T5
DWG# 4315

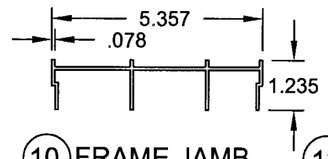

10 FRAME JAMB
MAT'L: 6063-T5
DWG# 4304

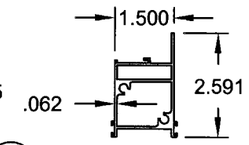

12 TOP & BOTT. RAIL
MAT'L: 6063-T5
DWG# 4305A

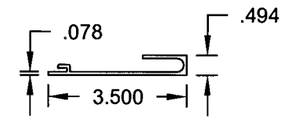

99 3.50" SILL RISER
MAT'L: 6063-T6
DWG# 4411

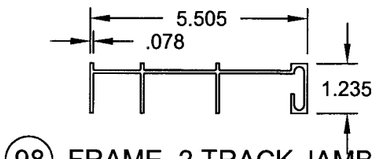

98 FRAME, 2 TRACK JAMB W/ SCREEN RAIL
MAT'L: 6063-T6
DWG# 4443

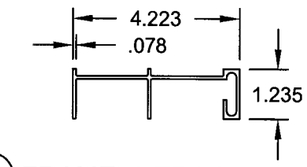

97 FRAME, 2 TRACK JAMB
MAT'L: 6063-T6
DWG# 4417

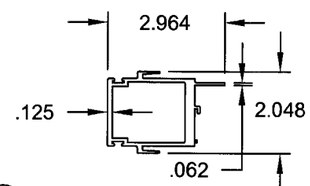

20 FXD DOUBLE INT/LK
MAT'L: 6063HDT6
DWG# 4383

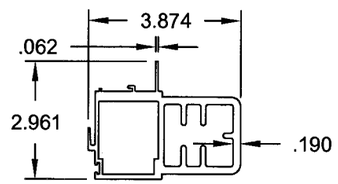

25 MOVING INTERLOCK
MAT'L: 6063HDT6
DWG# 4382

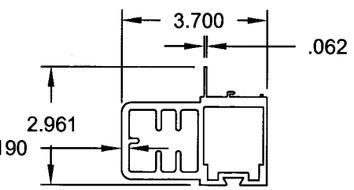

32 ASTRAGAL BASE
MAT'L: 6063-T5
DWG# 4379

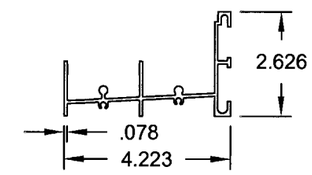

93 FRAME, 2 TRACK SILL
MAT'L: 6063-T6
DWG# 4409

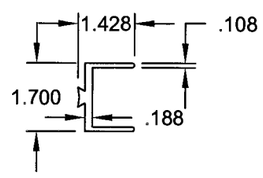

40 FEMALE ADD-ON
MAT'L: 6063-T5
DWG# 4380

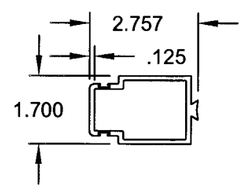

43 MALE ADD-ON
MAT'L: 6063-T5
DWG# 4381

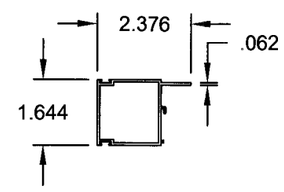

16 LOCK STILE
MAT'L: 6063-T5
DWG# 4306

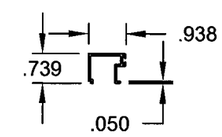

59 3/8" GLAZING BEAD
MAT'L: 6063-T5
DWG# 4394

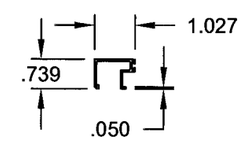

58 3/16" - 1/4" GLAZING BEAD
MAT'L: 6063-T5
DWG# 4323

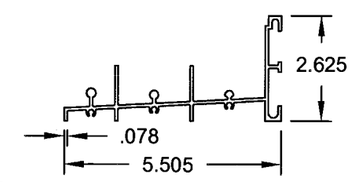

94 FRAME, 2 TRACK SILL W/ SCREEN RAIL
MAT'L: 6063-T6
DWG# 4442

PRODUCT REVISED
as complying with the Florida Building Code
Acceptance No 06-0807.04
Expiration Date 02/17/08
By M. Thah
Miami Dade Product Control Division

Revsd By:	Date:	Revisions:	
Revsd By:	Date:	Revisions:	
Revsd By: F.K.	Date: 6/1/07	Revisions: G	REDRAWN. NO CHANGE TO EXTRUSIONS.
Drawn By: F.K.	Date: 7/30/02	Checked By: J.J.	Date: XX/XX/XX

1070 TECHNOLOGY DRIVE
NOKOMIS, FL 34275

P.O. BOX 1529
NOKOMIS, FL 34274

PGT
Visibly Better

Description: EXTRUSIONS

Title: ALUM. SLIDING GLASS DOOR, NON-IMPACT

Series/Model:	Scale:	Sheet:	Drawing No.	Rev:
SGD830	1/4x	12 of 13	4392-3	G

8/13/07

Robert L. Clark, P.E.
PE #39712
Structural

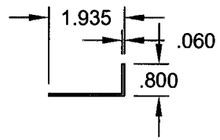

(73) FIXED PANEL CLIP
MAT'L: 6063-T5
DWG# 4362-1

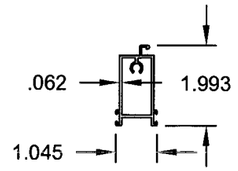

(80) SCREEN FRAME TOP RAIL
MAT'L: 6063-T5
DWG# 4317

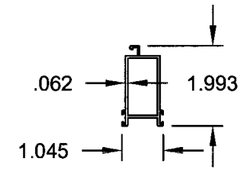

(81) BOTTOM RAIL
MAT'L: 6063-T5
DWG# 4318

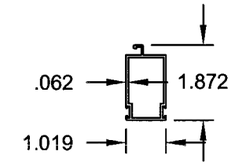

(82) SCREEN FRAME SIDE RAIL
MAT'L: 6063-T5
DWG# 4319

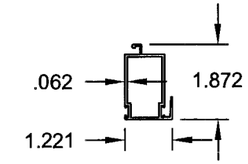

(85) SCREEN FRAME MEETING RAIL
MAT'L: 6063-T5
DWG# 4320

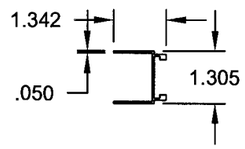

(86) SCREEN ASTRAGAL
MAT'L: 6063-T5
DWG# 4344

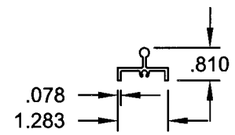

(90) SCREEN, 1 TRACK FRAME, SILL
MAT'L: 6063-T6
DWG# 4424

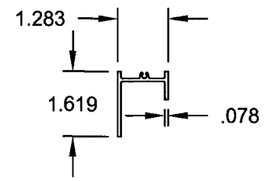

(91) SCREEN, 1 TRACK FRAME, HEAD
MAT'L: 6063-T6
DWG# 4425

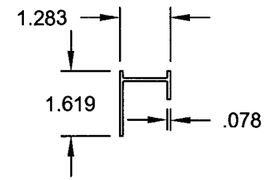

(92) SCREEN, 1 TRACK FRAME, JAMB
MAT'L: 6063-T6
DWG# 4426

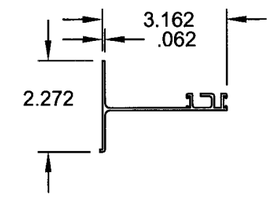

(88) SCREEN ASTRAGAL ADAPTER
MAT'L: 6063-T5
DWG# 4384

(2) SCREWS AT TOP & BOTTOM RAIL
(4) TOTAL PER SIDE

TYP. PANEL CONSTRUCTION
(TOP VIEW)

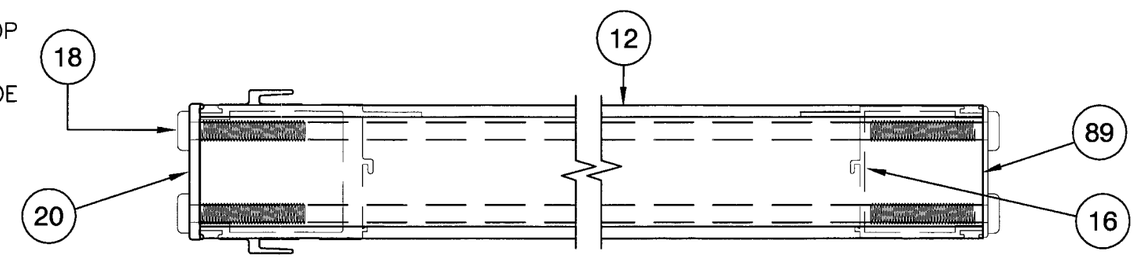

FRAME CONSTRUCTION
(TOP VIEW)

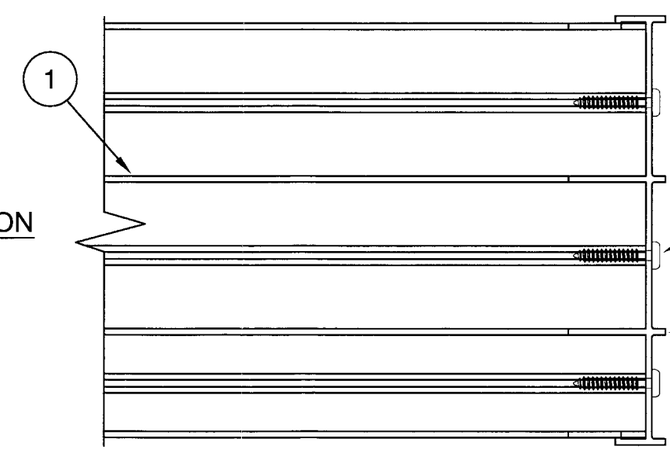

(3) SCREWS AT HEAD & SILL
(6) TOTAL PER JAMB

PRODUCT APPROVED
In complying with the Florida
Building Code
Acceptance No 06-0807.04
Expiration Date 03/13/08
By [signature]
Miami Dade Product Control
Division

[signature]
8/13/07
Robert L. Clark, P.E.
PE #39712
Structural

Revsd By:	Date:	Revisions:	
Revsd By:	Date:	Revisions:	
Revsd By: F.K.	Date: 6/1/07	Revisions: G	REDRAWN. NO CHANGE TO EXTRUSIONS OR CORNER ASSEMBLY DETAILS. CORRECT ITEM 73 AND DRAWING NUMBER.
Drawn By: F.K.	Date: 7/30/02	Checked By: J.J.	Date: XX/XX/XX

1070 TECHNOLOGY DRIVE
NOKOMIS, FL 34275

P.O. BOX 1529
NOKOMIS, FL 34274

PGT
Visibly Better

Description: EXTRUSIONS AND CORNER CONSTRUCTION

Title: ALUM. SLIDING GLASS DOOR, NON-IMPACT

Series/Model:	Scale:	Sheet:	Drawing No.	Rev:
SGD830	1/4x	13 of 13	4392-3	G