MIAMI-DADE COUNTY

BUILDING CODE COMPLIANCE OFFICE (BCCO)
PRODUCT CONTROL DIVISION

MIAMI-DADE COUNTY, FLORIDA
METRO-DADE FLAGLER BUILDING
140 WEST FLAGLER STREET, SUITE 1603
MIAMI, FLORIDA 33130-1563
(305) 375-2901 FAX (305) 375-2908
www.buildingcodeonline.com

NOTICE OF ACCEPTANCE (NOA)

PGT Industries
P.O. Box 1529
Nokomis, FL 34274

SCOPE:
This NOA is being issued under the applicable rules and regulations governing the use of construction materials. The documentation submitted has been reviewed by Miami-Dade County Product Control Division and accepted by the Board of Rules and Appeals (BORA) to be used in Miami Dade County and other areas where allowed by the Authority Having Jurisdiction (AHJ).

This NOA shall not be valid after the expiration date stated below. The Miami-Dade County Product Control Division (In Miami Dade County) and/or the AHJ (in areas other than Miami Dade County) reserve the right to have this product or material tested for quality assurance purposes. If this product or material fails to perform in the accepted manner, the manufacturer will incur the expense of such testing and the AHJ may immediately revoke, modify, or suspend the use of such product or material within their jurisdiction. BORA reserves the right to revoke this acceptance, if it is determined by Miami-Dade County Product Control Division that this product or material fails to meet the requirements of the applicable building code.
This product is approved as described herein, and has been designed to comply with the Florida Building Code, including the High Velocity Hurricane Zone.

DESCRIPTION: Series FD-101 Outswing Aluminum French Door w/ Sidelites - Impact

APPROVAL DOCUMENT: Drawing No. **972**, titled "Aluminum French Door w/ Sidelites", sheets 1 through 9 of 9, prepared by PGT Industries, dated 7-12-99 and last revised on 09-27-06, signed and sealed by Robert L. Clark, P.E., bearing the Miami-Dade County Product Control Revision stamp with the Notice of Acceptance number and expiration date by the Miami-Dade County Product Control Division.

MISSILE IMPACT RATING: Large and Small Missile Impact

LABELING: Each unit shall bear a permanent label with the manufacturer's name or logo, city, state and following statement: "Miami-Dade County Product Control Approved", unless otherwise noted herein.

RENEWAL of this NOA shall be considered after a renewal application has been filed and there has been no change in the applicable building code negatively affecting the performance of this product.

TERMINATION of this NOA will occur after the expiration date or if there has been a revision or change in the materials, use, and/or manufacture of the product or process. Misuse of this NOA as an endorsement of any product, for sales, advertising or any other purposes shall automatically terminate this NOA. Failure to comply with any section of this NOA shall be cause for termination and removal of NOA.

ADVERTISEMENT: The NOA number preceded by the words Miami-Dade County, Florida, and followed by the expiration date may be displayed in advertising literature. If any portion of the NOA is displayed, then it shall be done in its entirety.

INSPECTION: A copy of this entire NOA shall be provided to the user by the manufacturer or its distributors and shall be available for inspection at the job site at the request of the Building Official.
This NOA **revises NOA # 02-0927.13** and, consists of this page 1 as well as approval document mentioned above.
The submitted documentation was reviewed by **Ishaq I. Chanda**

PRODUCT CONTROL ACCEPTED

10/25/06

PGT Industries

NOTICE OF ACCEPTANCE: EVIDENCE SUBMITTED

A. DRAWINGS (transferred from file #02-0927.13)

1. Manufacturer's die drawings and sections.
2. Drawing No. **972**, titled "Aluminum French Door w/ Sidelites", sheets 1 through 9 of 9, prepared by PGT Industries, dated 7-12-99 and last revised on 09-27-06, signed and sealed by Robert L. Clark, P.E.

B. TESTS (transferred from file #02-0927.13) Original test conducted per FBC, PA 201, 202 &203-94 now known as FBC, TAS 201, 202 & 203-94.

1. Test report on 1) Air Infiltration Test, per PA 202-94
   2) Uniform Static Air Pressure Test, Loading per PA 202-94
   3) Water Resistance Test, per PA 202-94.
   4) Forced Entry Test, per SFBC 3603.2 (b) and PA 202-94
   5) Large Missile Impact Test per SFBC and PA201-94
   6) Cyclic Wind Pressure Loading per SFBC and PA203-94

   along with marked-up drawings and installation diagram of an aluminum out swinging French door w\ sidelites, prepared by Fenestration Testing Laboratory, Inc., Test Report No. **FTL-2067**, dated August 12, 1998, signed and sealed by Gilbert Diamond, P.E.
2. Additional test report on (submitted for hardware & glazing qualification) (transferred from file #02-0927.13)
   1) Air Infiltration Test, per PA 202-94
   2) Uniform Static Air Pressure Test, Loading per PA 202-94
   3) Large Missile Impact Test per SFBC, PA201-94
   4) Cyclic Wind Pressure Loading per SFBC, PA 203-94
   5) Water Resistance Test, per PA 202-94.
   6) Forced Entry Test, per SFBC 3603.2 (b) and PA 202-94

   along with marked-up drawings and installation diagram of an aluminum out swinging French door, prepared by Fenestration Testing Laboratory, Inc., Test Report No. **FTL-2612**, dated September 29, 2000, signed and sealed by Aldo P. Gonzales, P.E
3. Additional reference test reports FTL-1973 & FTL-2241 per PA201, 202 &203, issued by Fenestration Testing Laboratory, Inc., dated March 19, 1998 and January 14, 1999, signed and sealed by Gilbert Diamond, P.E.

C. CALCULATIONS

1. Anchor verification dated 07-21-06 and last revised on 09/27/06 complying w/ FBC 2004 prepared, signed and sealed by Robert L. Clark, P.E.
2. Anchor Verification Calculations dated 07-12-99 and revised on 1-14-00, prepared, signed and sealed by Robert L. Clark, P.E. (transferred from file #02-0927.13)
3. Glazing complies with ASTME-1300-02

Ishaq I. Chanda

Ishaq I. Chanda, P.E.
Product Control Examiner
NOA No. 06-0807.07
Expiration Date: February 13, 2008
Approval Date: November 08, 2006

NOTICE OF ACCEPTANCE: EVIDENCE SUBMITTED

D MATERIAL CERTIFICATIONS

1. Notice of Acceptance No. 05-1208.02 issued to E. I. DuPont DeNemours. for "***Butacite PVB*** ", expiring on 12/11/2010.
2. Notice of Acceptance No. 03-0827.08 issued to Solutia, Inc. for "***Solutia Interlayers***", expiring on 03/04/09.

E. STATEMENTS (transferred from file# **02-0702.01**).

1. Statement letter of conformance and no financial interest, dated July 12, 199, signed by Robert L. Clark, P.E.
2. Letter of lab compliance, dated August 12, 1998, prepared by Fenestration Testing Laboratory, Inc., signed and sealed by Gilbert Diamond, P.E.
3. Addendum letter, along with marked-up drawing of reinforcement (sidelite) dated 2-3-2000, issued by Fenestration Testing Laboratory.
4. Letter of lab compliance, dated September 28, 2000, prepared by Fenestration Testing Laboratory, Inc., signed and sealed by Aldo P. Gonzales, P.E
6. Meeting Summary dated January 26, 1999, issued by BBCO

D. OTHER

1. This NOA **revises** NOA # **02-0927.13.**
2. E-mail correspondences dated May-September 2006 between PGT and BCCO.
3. Manufacturer's "Quality Operation Procedure", submitted per meeting summary dated January 26, 1999 (Note: This series FD-101 door is related to file 98-0506.02, requiring strict manufacturing quality procedure to be followed.)
4. Prior related file NOA(s) **02-0927.13**, **01-0417.06** & **98-0506.02**.

Ishaq I. Chanda

Ishaq I. Chanda, P.E.
Product Control Examiner
NOA No. 06-0807.07
Expiration Date: February 13, 2008
Approval Date: November 08, 2006

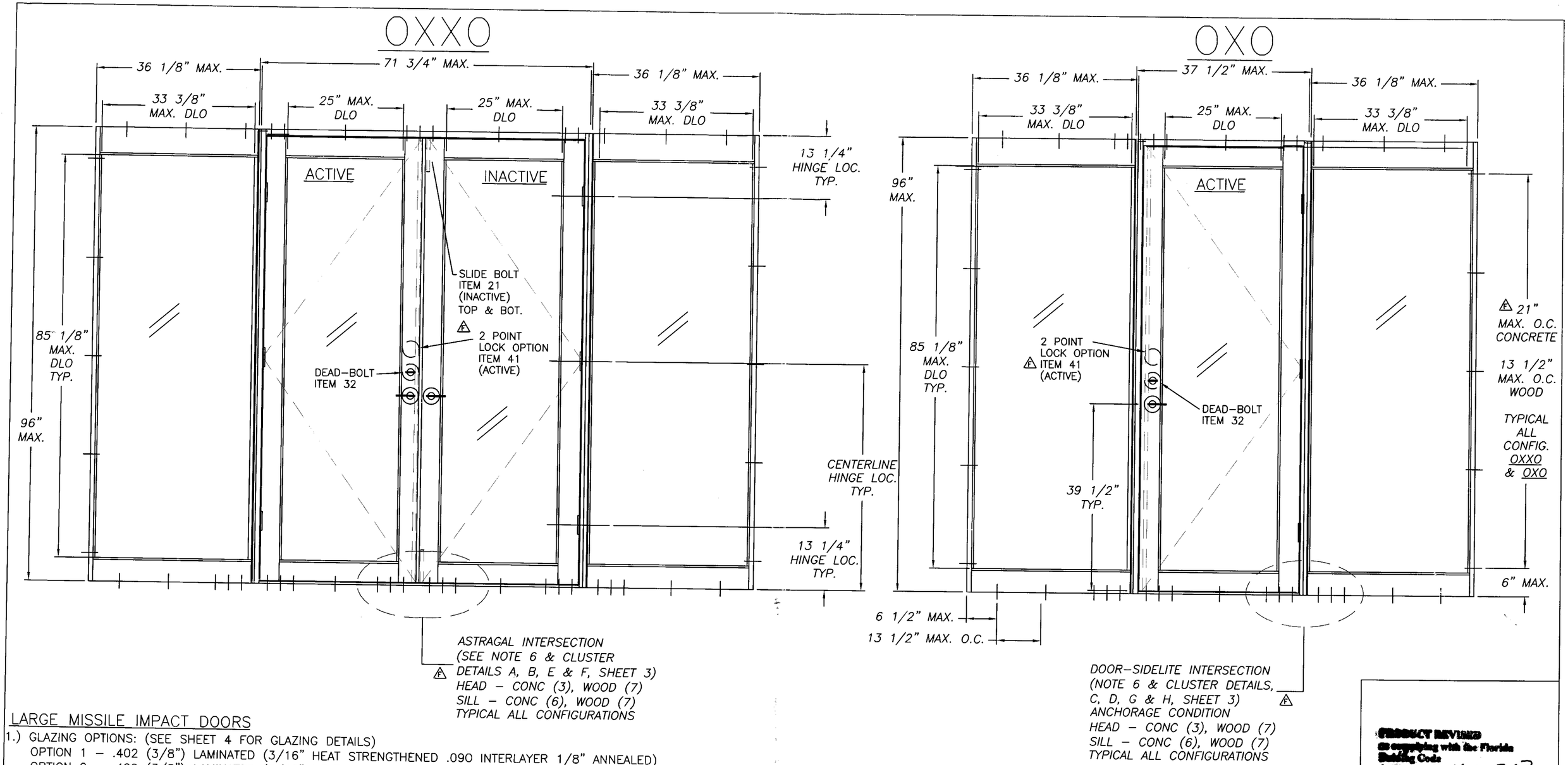

LARGE MISSILE IMPACT DOORS

1.) GLAZING OPTIONS: (SEE SHEET 4 FOR GLAZING DETAILS)
OPTION 1 – .402 (3/8") LAMINATED (3/16" HEAT STRENGTHENED .090 INTERLAYER 1/8" ANNEALED)
OPTION 2 – .402 (3/8") LAMINATED (3/16" HEAT STRENGTHENED .090 INTERLAYER 1/8" HEAT STRENGTHENED)
OPTION 3 – 7/16" LAMINATED (3/16" HEAT STRENGTHENED .090 INTERLAYER 3/16" ANNEALED)
OPTION 4 – 7/16" LAMINATED (3/16" HEAT STRENGTHENED .090 INTERLAYER 3/16" HEAT STRENGTHENED)
2.) DESIGN PRESSURE RATING: (SEE TABLES SHEET 3)
3.) ANCHORAGE: THE 33 1/3% STRESS INCREASE HAS NOT BEEN USED IN THE DESIGN OF THIS PRODUCT. FOR ANCHOR SPACING SEE NOTES 6 AND 7, SHEET 3.
4.) SHUTTER REQUIREMENT: SHUTTERS NOT REQUIRED.
5.) REFERENCES: TEST REPORTS FTL-2067, 2241 AND FTL-2612
ELCO TEXTRON NOA 04-0721.01 AND 03-02255.05
ANSI/AF&PA NDS-2001 FOR WOOD CONSTRUCTION
6.) SEALANT TO BE APPLIED AROUND THE FRAME CORNER & PANEL CORNER SEAM.
7.) THIS PRODUCT HAS BEEN DESIGNED AND TESTED TO COMPLY WITH THE REQUIREMENTS OF THE FLORIDA BUILDING CODE, 2004 EDITION FOR THE HIGH VELOCITY HURRICANE ZONE (HVHZ).
8.) CONFIGURATIONS: OXXO, OXO, OX, XO, XX, X AND O

PRODUCT REVISED
as complying with the Florida Building Code
Acceptance No 06-0807.07
Expiration Date FEB 13, 2008
By Ishaq I. Chanda
Miami Dade Product Control Division

9/27/06
Robert L. Clark, P.E.
PE #39712
Structural

PGT INDUSTRIES
1070 TECHNOLOGY DRIVE
NOKOMIS, FL 34275
P.O. BOX 1529
NOKOMIS, FL 34274

Revsd By:	Date:	Revisions:
F.K.	7/15/06	E-ADD CONFIG. REVISE ANCHORAGE
F.K.	9/22/06	F-ADD FTL-2612 & MISC. MARKED CHANGES
Drawn By: D.B.	Date: 7/12/99	

Description: ELEVATIONS OXXO & OXO

Title: ALUMINUM FRENCH DOOR W/ SIDELITES

Series/Model:	Scale:	Sheet:	Drawing No.	Rev:
FD-101	NTS	1 of 9	972	F

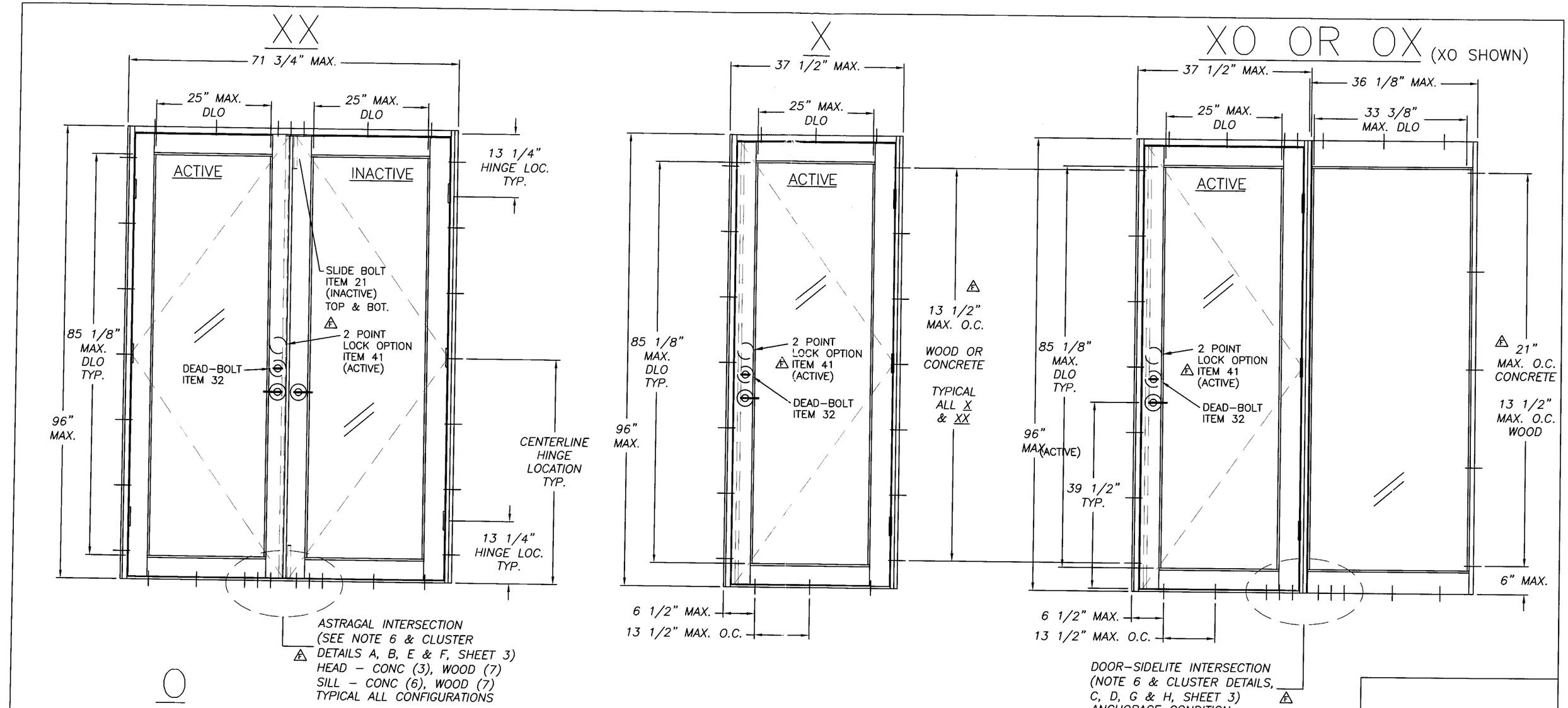

9/27/06

Robert L. Clark, P.E.
PE #39712
Structural

PGT INDUSTRIES

1070 TECHNOLOGY DRIVE
NOKOMIS, FL 34275

P.O. BOX 1529
NOKOMIS, FL 34274

Revsd By:	Date:	Revisions:
F.K.	7/15/06	E–NEW SHT. ADD XX, X, XO, OX, O
F.K.	9/22/06	F–REVISE ANCHORAGE
Drawn By: D.B.	Date: 7/12/99	

PRODUCT REVISED
in complying with the Florida Building Code
Acceptance No. OL-0807-07
Expiration Date FEB 13, 2008
By Shaq J. Chanda
Miami Dade Product Control Division

Description: ELEVATIONS – XX, X, XO, OX AND O

Title: ALUMINUM FRENCH DOOR W/ SIDELITES

Series/Model:	Scale:	Sheet:	Drawing No.	Rev:
FD–101	NTS	2 of 9	972	F

COMPARATIVE ANALYSIS TABLE 1. - GLASS OPTION 1

3/8" LAMI (3/16" HEAT STRENGTHENED .090 PVB 1/8" ANNEALED)

CONFIG.	WIDTH	HEIGHTS 79.750		83.750		87.750		91.750		95.750	
O	30.000	+75.0	-75.0	+75.0	-75.0	+75.0	-75.0	+75.0	-75.0	+75.0	-75.0
	33.000	+75.0	-75.0	+75.0	-75.0	+75.0	-75.0	+74.2	-74.2	+71.9	-71.9
	36.125	+75.0	-75.0	+75.0	-75.0	+71.5	-71.5	+67.8	-67.8	+64.4	-64.4
X	37.500	+75.0	-75.0	+75.0	-75.0	+75.0	-75.0	+75.0	-75.0	+75.0	-75.0
XX	71.750	+75.0	-75.0	+75.0	-75.0	+75.0	-75.0	+75.0	-75.0	+75.0	-75.0

OX, XO, OXO, OXXO DESIGN PRESSURE = WIDTH DP OF ABOVE SIDELITE

COMPARATIVE ANALYSIS TABLE 2. - GLASS OPTIONS 2, 3 AND 4

3/8" LAMI (3/16" HEAT STRENGTHENED .090 PVB 1/8" HEAT STRENGTHENED)

7/16" LAMI (3/16" HEAT STRENGTHENED .090 PVB 3/16" ANNEALED)

7/16" LAMI (3/16" HEAT STRENGTHENED .090 PVB 3/16" HEAT STRENGTHENED)

CONFIG.	WIDTH	HEIGHTS 79.750		83.750		87.750		91.750		95.750	
O	36.125	+75.0	-75.0	+75.0	-75.0	+75.0	-75.0	+75.0	-75.0	+75.0	-75.0
X	37.500	+75.0	-75.0	+75.0	-75.0	+75.0	-75.0	+75.0	-75.0	+75.0	-75.0
XX	71.750	+75.0	-75.0	+75.0	-75.0	+75.0	-75.0	+75.0	-75.0	+75.0	-75.0
OX, XO, OXO, OXXO DP (ALL HEIGHTS TO 95.750)										+75.0	-75.0

NOTES:

1.) NEGATIVE DESIGN LOADS BASED ON TESTED PRESSURE AND GLASS TABLES ASTM E 1300-02. △
2.) POSITIVE DESIGN LOADS BASED ON WATER TEST PRESSURE AND GLASS TABLES ASTM E 1300-02.
3.) GENERAL: DAY LIGHT OPENING (DLO) HEIGHT = DOOR HEIGHT -10 7/8".
SIDELITE DLO WIDTH = SIDELITE WIDTH -2 3/4".
DOOR PANEL DLO WIDTH = PANEL WIDTH -12 1/2".
4.) THE DP FOR XO, OX, OXO AND OXXO DOORS EQUALS THE DESIGN PRESSURE FOR THE LARGEST SIDELITE (O) COMPONENT.
5.) APPROVED ANCHOR TYPES: WHERE FLAT HEAD ANCHORS ARE REQUIRED THEY MUST BE #12 HEAD OR ELCO TRIMFIT HEAD.
A. 1/4" ELCO TAPCON B. 1/4" ELCO SS4 CRETE-FLEX C. #12 STEEL SCREW (G5)
6.) ANCHORAGE: ANCHOR TYPES A OR B IN CONCRETE. ANCHOR TYPES A, B OR C IN WOOD.
HEAD & SILL: 6 1/2" MAX. FROM CORNERS AND 13 1/2" MAX. O.C.
△ ANCHOR TYPES A OR B CONCRETE SUBSTRATE:
HEAD AT ASTRAGALS: 4" MAX. EACH SIDE OF CENTERLINE & (1) ANCHOR ON CENTERLINE (TOTAL 3). SEE DETAIL A.
HEAD AT DOOR-SIDELITE INTERSECTION: 4" MAX. ON SIDELITE SIDE AND 4" & 8" MAX. ON DOOR SIDE (TOTAL 3). SEE DETAIL C.
SILL AT ASTRAGALS & DOOR-SIDELITE INTERSECTION: 4", 8" & 12" MAX. EACH SIDE OF CENTERLINE (TOTAL 6). SEE DETAILS B & D.
SIDELITE JAMBS: 6" MAX. FROM CORNERS AND 13 1/2" MAX. O.C.
DOOR JAMBS: 6" MAX. FROM CORNERS AND 21" MAX. O.C.
ANCHOR TYPES A, B OR C WOOD SUBSTRATE:
HEAD AND SILL AT ASTRAGALS: 4", 8" & 12" MAX. EACH SIDE OF CENTERLINE & (1) ANCHOR ON CENTERLINE TOTAL (7). SEE DETAILS E & F.
HEAD AND SILL AT DOOR-SIDELITE INTERSECTION: 4", 8" & 12" MAX. ON SIDELITE SIDE AND 4", 8", 12, & 16" ON DOOR SIDE (7). SEE DETAILS G & H.
DOOR AND SIDELITE JAMBS: 6" MAX. FROM CORNERS AND 13 1/2" MAX. O.C.

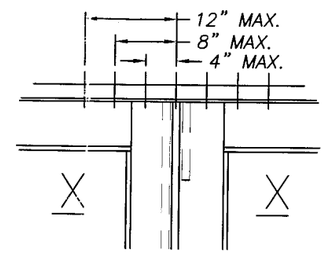

DETAIL E (ASTRAGAL HEAD)

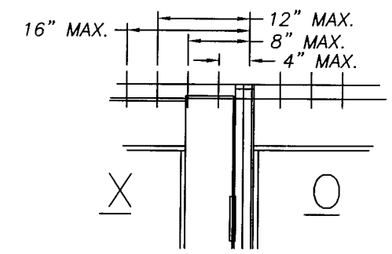

DETAIL G (DOOR-SIDELITE HEAD)

WOOD SUBSTRATE

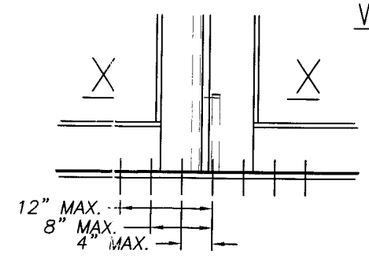

DETAIL F (ASTRAGAL SILL)

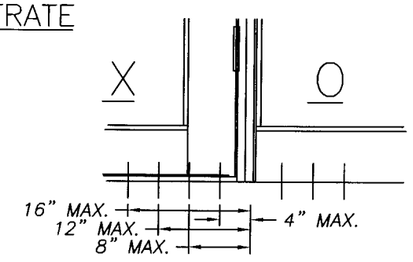

DETAIL H (DOOR-SIDELITE SILL)

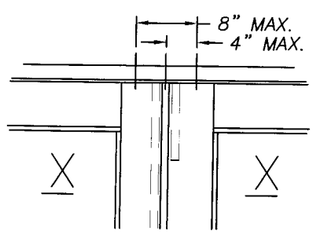

DETAIL A (ASTRAGAL HEAD)

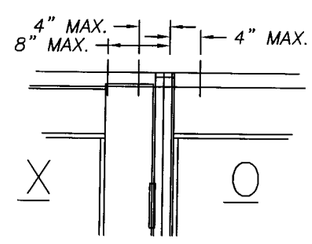

DETAIL C (DOOR-SIDELITE HEAD)

CONCRETE SUBSTRATE

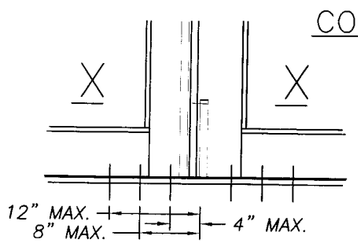

DETAIL B (ASTRAGAL SILL)

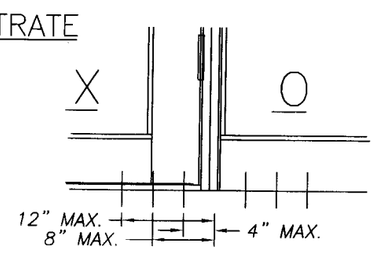

DETAIL D (DOOR-SIDELITE SILL)

9/27/06
Robert L. Clark, P.E.
PE #59712
Structural

PGT INDUSTRIES

1070 TECHNOLOGY DRIVE
NOKOMIS, FL 34275

P.O. BOX 1529
NOKOMIS, FL 34274

Revsd By:	Date:	Revisions:
F.K.	7/15/06	E-CONDENCE TABLES & REVISE ANCHORAGE
F.K.	9/22/06	F-REVISE TABLES & M-D ANCHORAGE. ADD DETAILS.
Drawn By: D.B.	Date: 7/12/99	

PRODUCT REVISED
as complying with the Florida Building Code
Acceptance No. 06-0807.07
Expiration Date FEB 13, 2008
By Ishaq I. Chanda
Miami Dade Product Control Division

Description: DESIGN PRESSURE TABLES

Title: ALUMINUM FRENCH DOOR W/ SIDELITES

Series/Model:	Scale:	Sheet:	Drawing No.	Rev:
FD-101	NTS	3 of 9	972	F

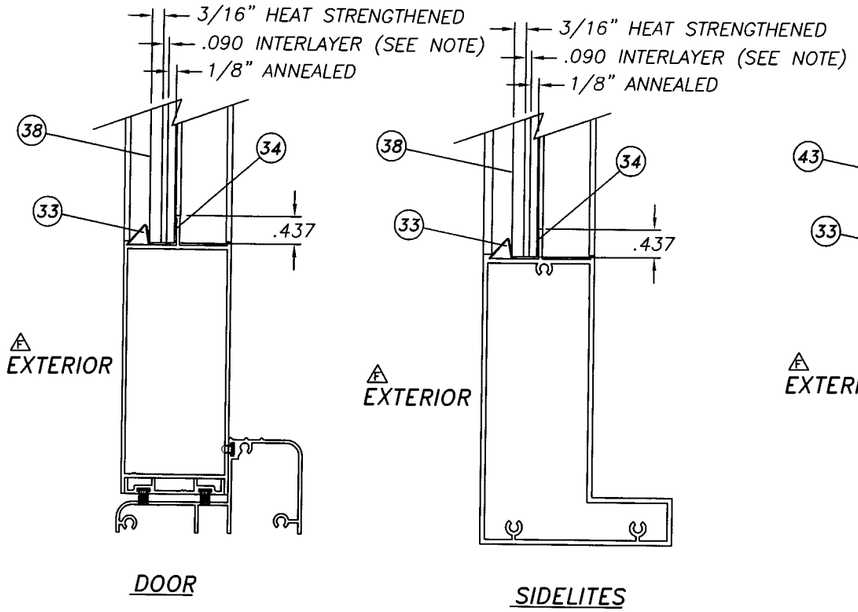

GLAZING OPTION 1
.402 (3/8") LAMINATED

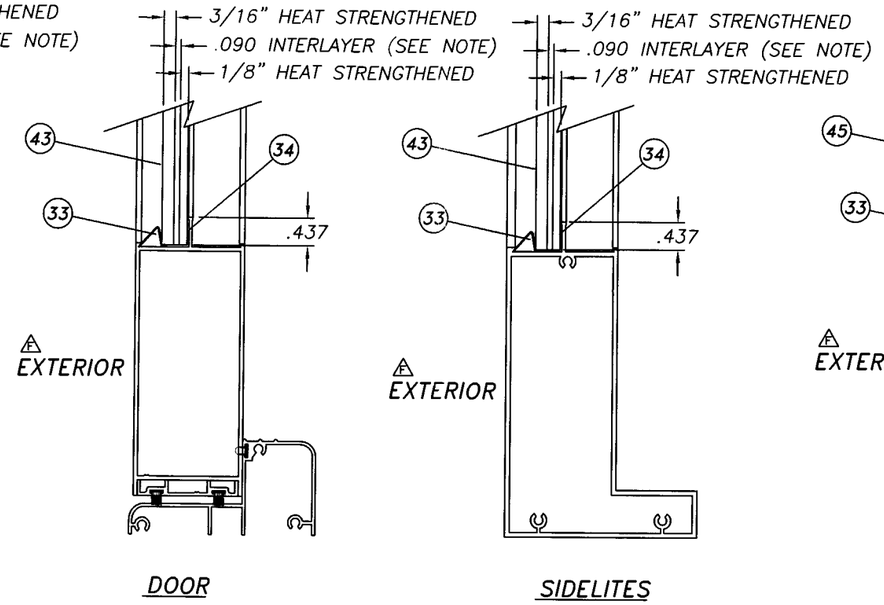

GLAZING OPTION 2
.402 (3/8") LAMINATED

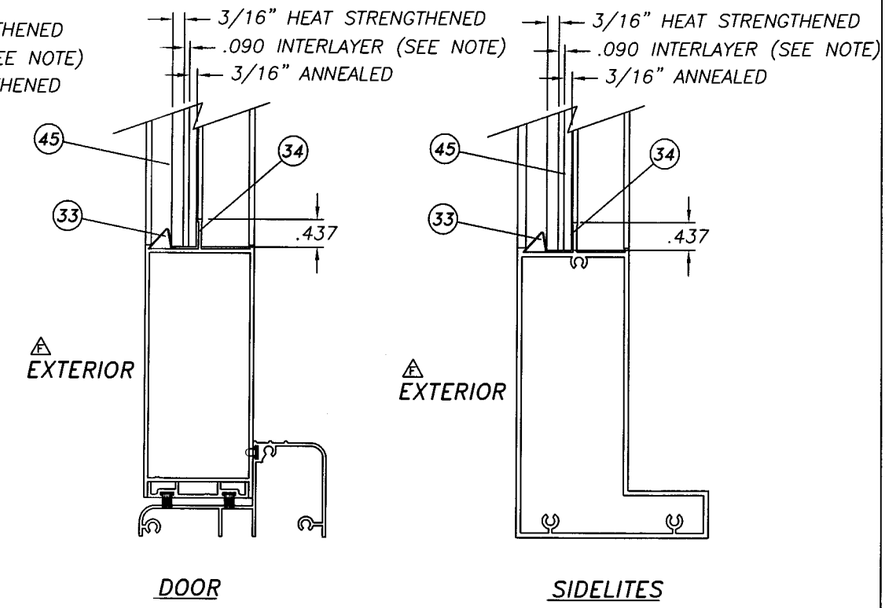

GLAZING OPTION 3
7/16" LAMINATED

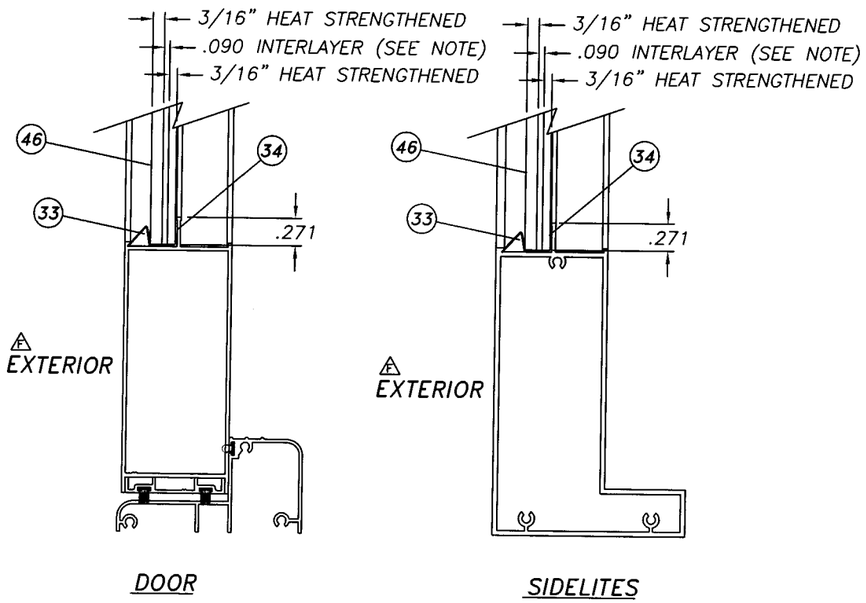

GLAZING OPTION 4
7/16" LAMINATED

NOTE: INTERLAYER MAY BE DUPONT BUTACITE PVB OR SOLUTIA SAFLEX/KEEPSAFE MAXIMUM.

PRODUCT REVISED
as complying with the Florida
Building Code
Acceptance No 06-0807.07
Expiration Date FEB 13, 2008
By Ishaq I. Lhanda
Miami Dade Product Control
Division

REFERENCE TEST REPORT: FTL-2067

9/27/06
Robert L. Clark, P.E.
PE #39712
Structural

PGT INDUSTRIES

1070 TECHNOLOGY DRIVE
NOKOMIS, FL 34275

P.O. BOX 1529
NOKOMIS, FL 34274

Revsd By:	Date:	Revisions:
F.K.	7/15/06	E-NO CHG THIS SHT
F.K.	9/22/06	F-ADD SOLUTIA & EXT.
Drawn By: D.B.	Date: 7/12/99	

Description: GLAZING DETAILS

Title: ALUMINUM FRENCH DOOR W/ SIDELITES

Series/Model:	Scale:	Sheet:	Drawing No.	Rev:
FD-101	NTS	4 of 9	972	F

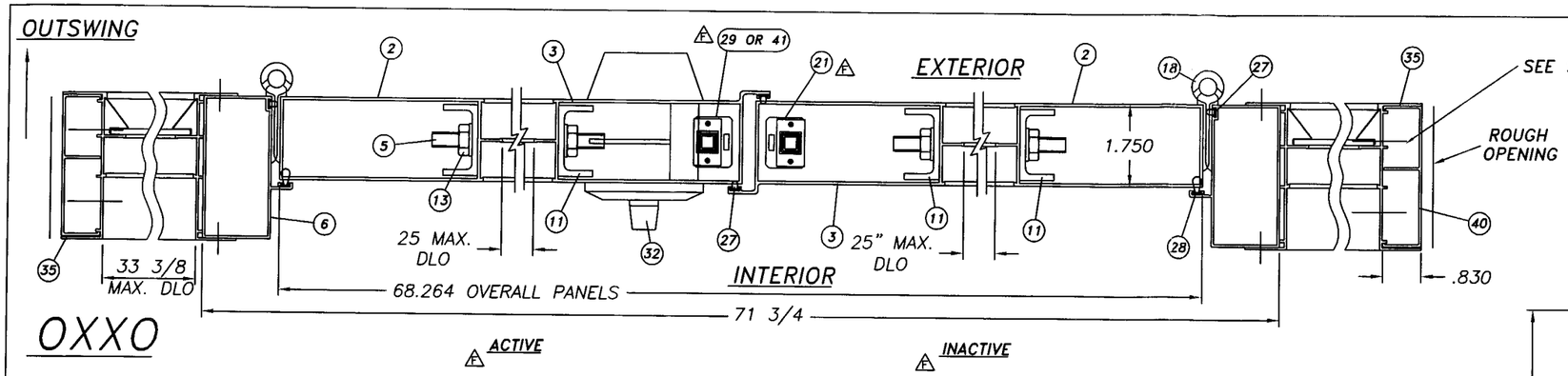

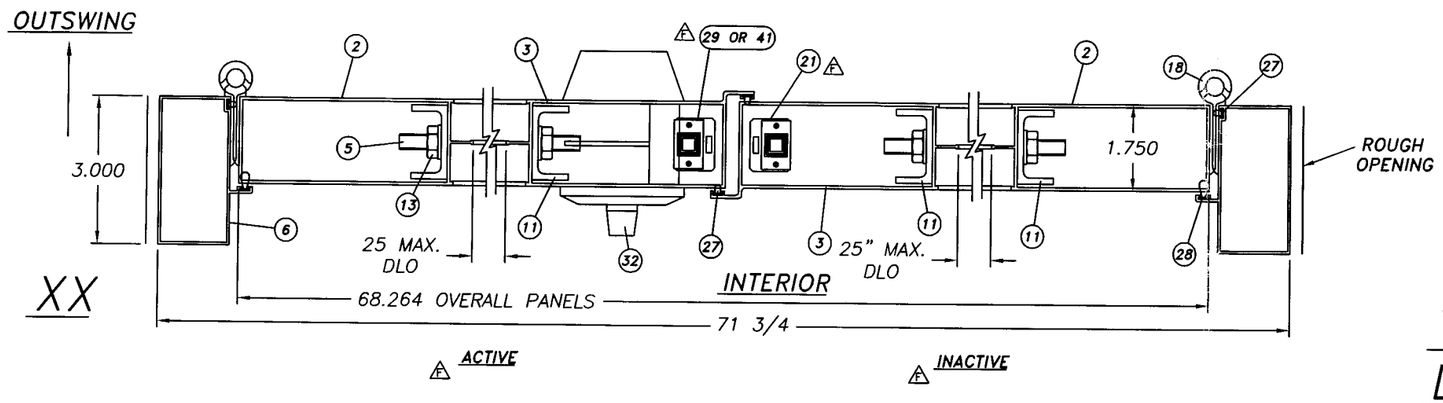

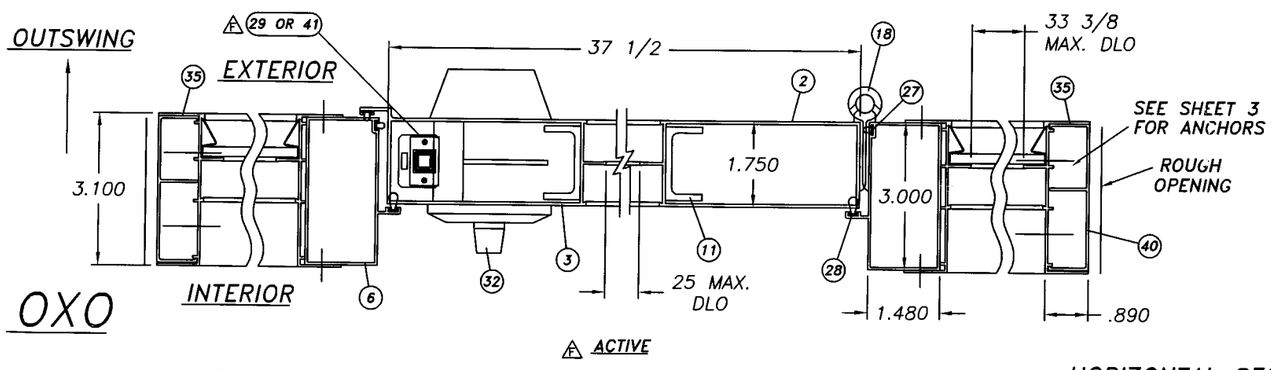

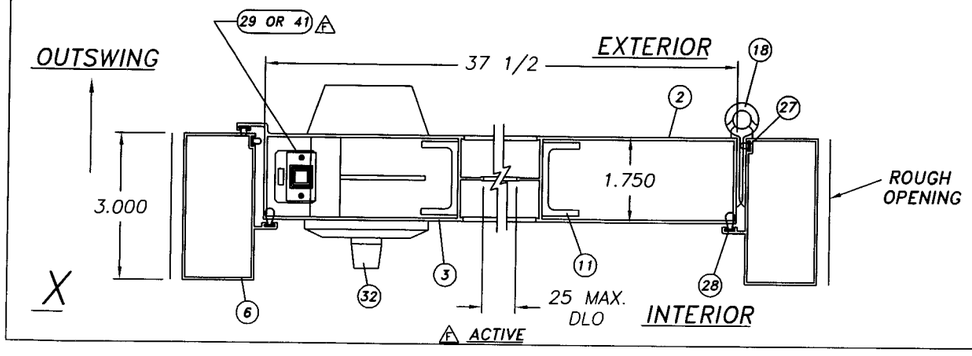

HORIZONTAL SECTIONS

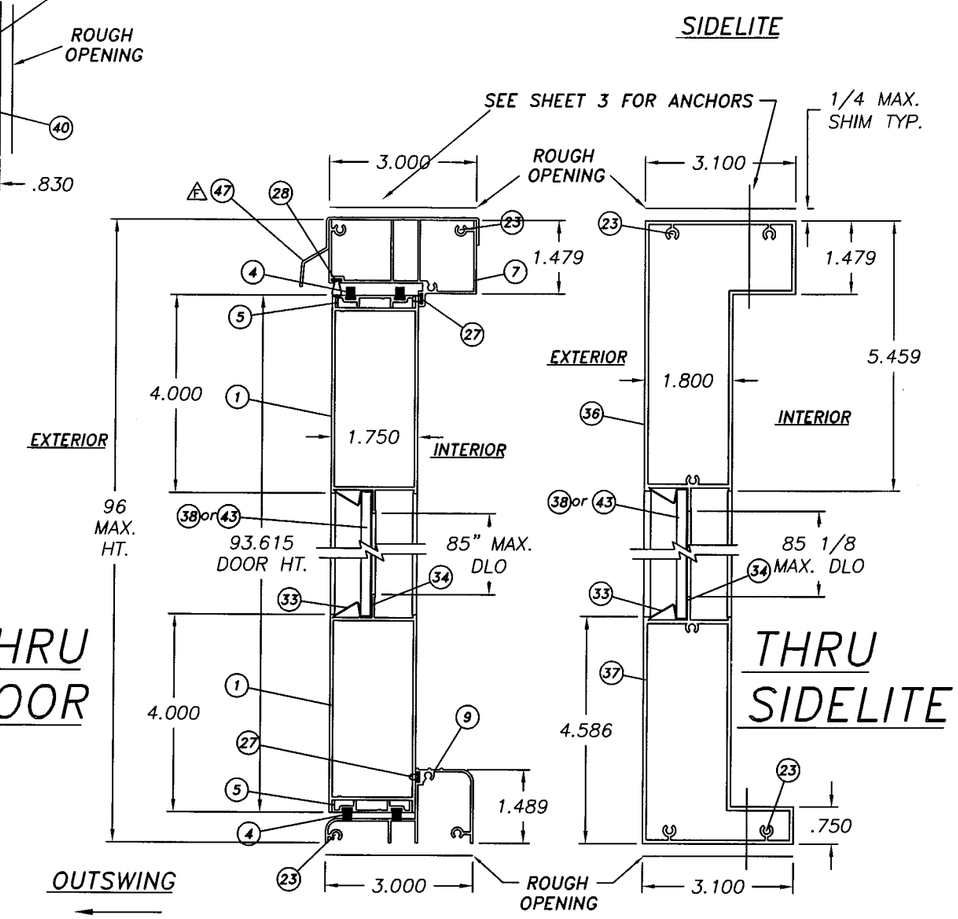

VERTICAL SECTIONS

PRODUCT REVISED
as complying with the Florida Building Code
Acceptance No. 06-0807.07
Expiration Date FEB 13, 2008
By Ishaq I. Chanda
National Dade Product Control Division

9/29/06
Robert L. Clark, P.E.
PE #39712
Structural

PGT INDUSTRIES

1070 TECHNOLOGY DRIVE
NOKOMIS, FL 34275

P.O. BOX 1529
NOKOMIS, FL 34274

Revsd By:	Date:	Revisions:
F.K.	7/15/06	E-ADD X & XX SECT.
F.K.	9/22/06	F-ADD ITEM 47 & LOCK CLARIFICATION
Drawn By: D.B.	Date: 7/12/99	

Description: SECTIONS

Title: ALUMINUM FRENCH DOOR W/ SIDELITES

Series/Model:	Scale:	Sheet:	Drawing No.	Rev:
FD-101	NTS	5 of 9	972	F

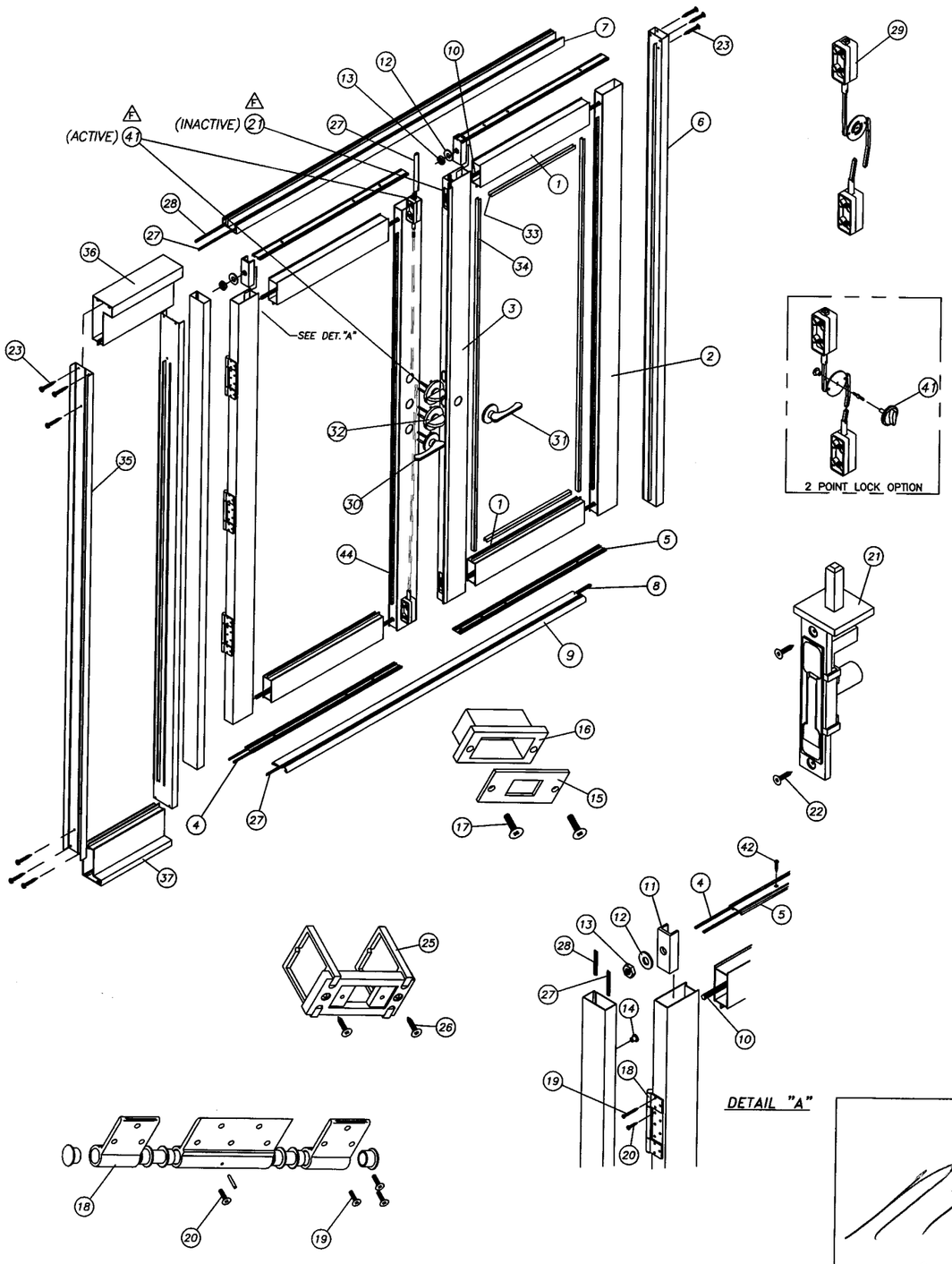

	ITEM	DESCRIPTION	V.T. #	VENDOR	VENDOR #
	1	DOOR HEAD/SILL (AL. 6063–T5/.062 WALL)	60375	ALUMAX	AF–10375
	2	DOOR JAMB (AL. 6063–T5/.062 WALL)	60376	ALUMAX	AF–10376
	3	DOOR ASTRAGAL INT. (AL. 6063–T5/.062 WALL)	60377	ALUMAX	AF–10377
	4	.250 x .187 FINSEAL W–STRIP	67924G	SCHLEGEL CORP.	FS7924–187
	5	WSTP. CHANNEL (AL. 6063–T5/.050 WALL)	60379	ALUMAX	AF–10379
F	6	FRAME JAMB (AL. 6063–T6/.050 WALL)	60380	ALUMAX	AF–10380
F	7	FRAME HEAD (AL. 6063–T6/.050 WALL)	60411	ALUMAX	AF–12376
	8	1 1/2 x 1" PAD			
F	9	Outsw. Threshold (AL. 6063–T6/.062 WALL)	61069	ALUMAX	AF–12375
	10	5/16x18 THREADED ROD	6TRODA	FASTEC INDUSTRIAL	
	11	Truss Clamp (AL. 6063–T5/.062 WALL)	60378M	ALUMAX	AF–10378
	12	5/16x1/16 TRUSS WASHER	7WASHA	FASTEC INDUSTRIAL	
	13	5/16x18 TRUSS NUT	7JNUTA	FASTEC INDUSTRIAL	
	14	FRAME SCR. COVER CAP	41722W	PGT INDUSTRIES	41722W
	15	STRIKE PLATE	7955X	CAMCORP	
	16	STRIKE PLATE INSERT	41721	PGT INDUSTRIES	41721
	17	10x3/4 SCR. FLT. HD. PHIL	71034A	MERCHANTS FASTENER	
	18	HINGE ASS'Y.	7FRMOW	NATIONWIDE IND.	
	19	10x.625 SCR. FLT. HD. PHIL	71058FP	MERCHANTS FASTENER	
	20	10x1/2 SCR. FLT. HD. PHIL.	710X12PPW	MERCHANTS FASTENER	
F	21	TOP/BOTT. SLIDE BOLT LOCK (INACTIVE PANEL)	41720	PGT INDUSTRIES	41720
	22	6x1/2 FLT. HD. PHIL.	7612FW	MERCHANTS FASTENER	
	23	8 x 1 SCR. PAN HD. QUAD.	781PQA	FASTEC INDUSTRIAL	
	24	6x7/8 SCR. FLT. HD. PHIL.	7PWSWA	FASTEC INDUSTRIAL	
	25	LOCK SUPPORT ASS'Y.	4UBLOK	PGT INDUSTRIES	4UBLOK
	26	6x3/4 FLT. HD. PHIL.	7634F	FASTEC INDUSTRIAL	
	27	.200 x .190 QLON	6Q200K	SCHLEGEL CORP.	Q200X190
	28	.375 x .190 QLON	6Q300W	SCHLEGEL CORP.	Q375x190
F	29	3 POINT LOCK ASS'Y. (ACTIVE PANEL)	FD3PTAY	PGT INDUSTRIES	FD3PTAY
	30	LOCK (ACTIVE)	7LOKAP	HARLOCK	100
	31	LOCK (DUMMY)	7LOKIP	HARLOCK	880
	32	DEAD–BOLT LOCK	7BLTIP	HARLOCK	820
	33	Rolled Alum. Glaz. Bead	65163	FLORIDA SCREEN	05–163
	34	SILICONE	62899C	DOW CORNING, 899 OR EQUIV.	
F	35	SIDELITE JAMB (AL. 6063–T6/.050 WALL)	60381	ALUMAX	AF–10381
F	36	SIDELITE HEADER (AL. 6063–T6/.075 WALL)	60414	ALUMAX	AF–10414
F	37	SIDELITE BOTTOM RAIL (AL. 6063–T6/.075 WALL)	60415	ALUMAX	AF–10415
F	38	.402 Laminated (.187 HS/.125 Annealed w/ Dupont Butacite PVB or Solutia Saflex/Keepsafe Maximum Inner Layer)		PPG. LOF	
	39	SEAM SEALER	6SM55W	SCHNEE/MOREHEAD	SM5504
	40	SIDELITE JAMB ADAPTER (REINFORCEMENT)	61641	ALUMAX	AF–11641
F	41	2 POINT LOCK OPTION (ACTIVE PANEL)	7978LAB	SULLIVAN & ASSOC.	
	42	#8 x .750 Ph. Fl. Tek	7834FPT	SPENCER PRODUCTS	
F	43	.402 Laminated (.187 HS/.125 HS w/ Dupont Butacite PVB or Solutia Saflex/Keepsafe Maximum Inner Layer)		PPG. LOF	
	44	DOOR ASTRAGAL EXT. (AL. 6063–T5/.062 WALL)	6984	KEYMARK	1154
F	45	7/16" Laminated (3/16" HS & 3/16" Annealed w/ Dupont Butacite PVB or Solutia Saflex/Keepsafe Maximum Inner Layer)		PPG. LOF	
F	46	7/16" Laminated (3/16 HS & 3/16" HS w/ Dupont Butacite PVB or Solutia Saflex/Keepsafe Maximum Inner Layer)		PPG. LOF	
F	47	FILLER HEAD ADAPTER, DRIP CAP (AL. 6063–T6/.050 WALL)	6533016	ALUMAX	45626

PRODUCT REVISED
in complying with the Florida
Building Code
Acceptance No. 06-0807.07
Expiration Date FEB 13, 2008
By Ishan I. Chanda
Miami Dade Product Control
Division

9/27/06
Robert L. Clark, P.E.
PE #39712
Structural

PGT INDUSTRIES

1070 TECHNOLOGY DRIVE
NOKOMIS, FL 34275

P.O. BOX 1529
NOKOMIS, FL 34274

Revsd By:	Date:	Revisions:
F.K.	7/15/06	E–REMOVE QTY. COL.
F.K.	9/22/06	Revisions: F–ADD ITEM 47 CLEARIFY LOCKS 41 & 21
Drawn By: D.B.	Date: 7/12/99	

Description: BILL OF MATERIALS

Title: ALUMINUM FRENCH DOOR W/ SIDELITES

Series/Model:	Scale:	Sheet:	Drawing No.	Rev:
FD–101	NTS	6 of 9	972	F

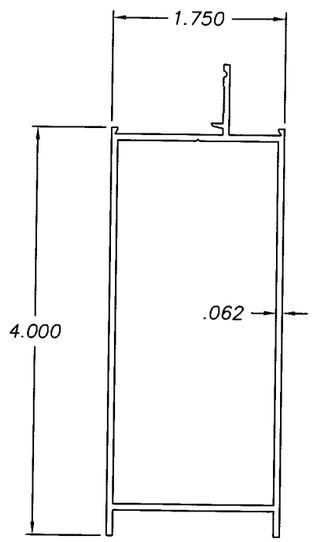

(1) DOOR PANEL HEAD & SILL
6063–T5 ALUM.

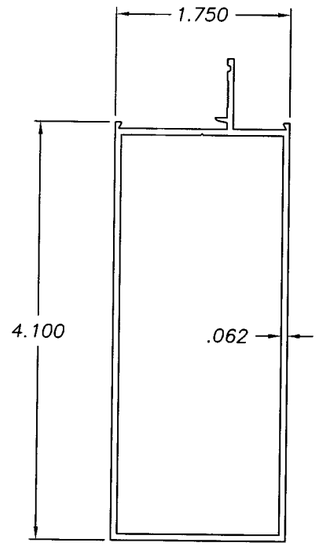

(2) DOOR PANEL JAMB
6063–T5 ALUM.

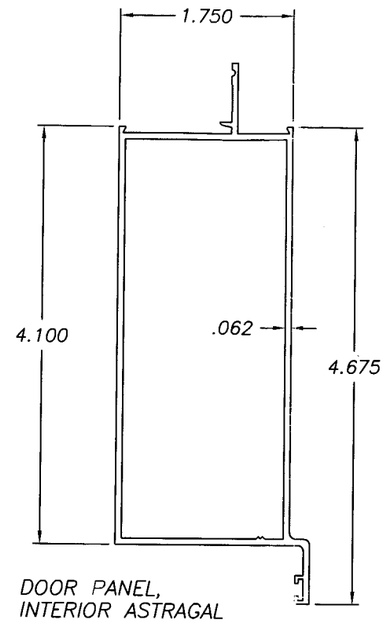

(3) DOOR PANEL,
INTERIOR ASTRAGAL
6063–T5 ALUM.

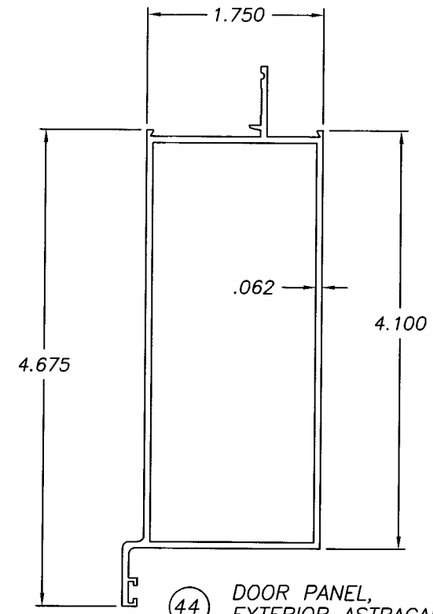

(44) DOOR PANEL,
EXTERIOR ASTRAGAL
6063–T5 ALUM.

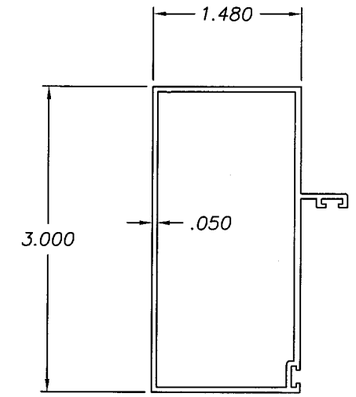

(6) FRAME JAMB
6063–T6 ALUM.

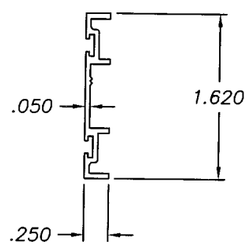

(5) WEATHER STRIP CHANNEL
6063–T5 ALUM.

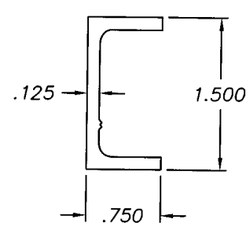

(11) TRUSS CLAMP
6063–T5 ALUM.

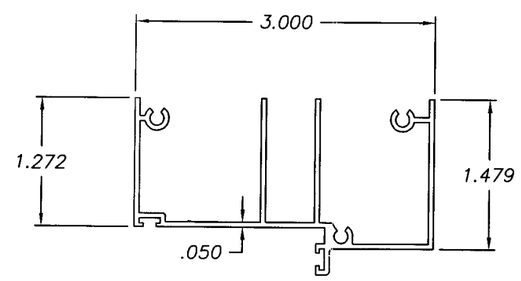

(7) FRAME HEAD
6063–T6 ALUM.

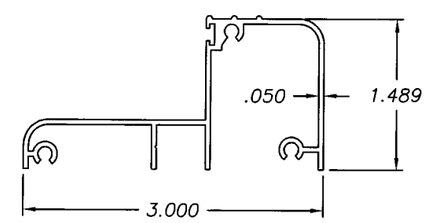

(9) OUTSWING THRESHOLD
6063–T6 ALUM.

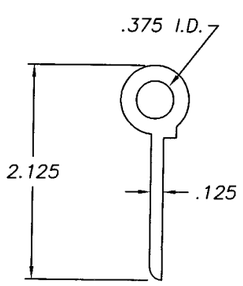

(18) HINGE EXTRUSION
6063–T5 ALUM.

9/27/06

Robert L. Clark, P.E.
PE #39712
Structural

PGT INDUSTRIES

1070 TECHNOLOGY DRIVE
NOKOMIS, FL 34275

P.O. BOX 1529
NOKOMIS, FL 34274

Revsd By:	Date:	Revisions:
F.K.	7/15/06	E–UPGRADE ALLOY,6,7&9
Revsd By: F.K.	Date: 9/22/06	Revisions: F–NO CHG THIS SHT
Drawn By: F.K.	Date: 9/9/02	

PRODUCT REVISED
as complying with the Florida
Building Code
Acceptance No 06-0807.07
Expiration Date FEB 13, 2008
By Ishaq I. Chanda
Miami Dade Product Control
Division

Description:
EXTRUSIONS PROFILES, DOORS

Title:
ALUMINUM FRENCH DOOR W/ SIDELITES

Series/Model:	Scale:	Sheet:	Drawing No.	Rev:
FD–101	NTS	7 of 9	972	F

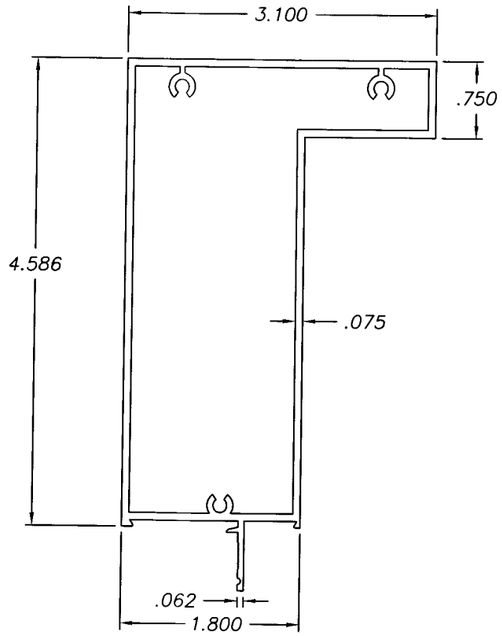

(37) SIDELITE BOTTOM RAIL
6063–T6 ALUM.

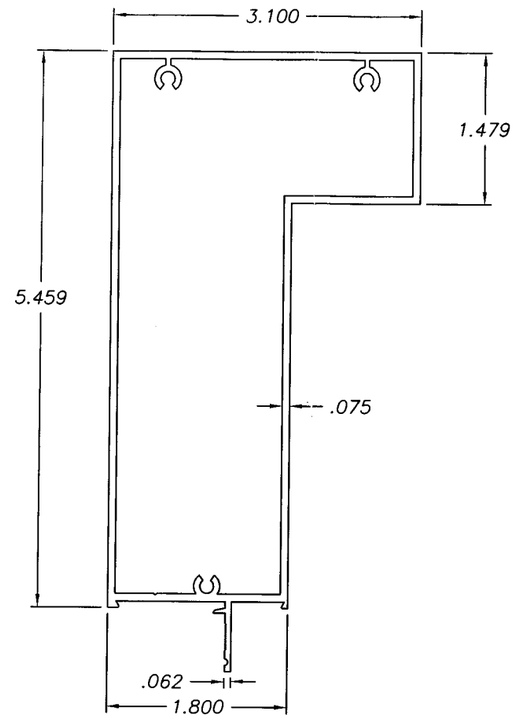

(36) SIDELITE HEADER
6063–T6 ALUM.

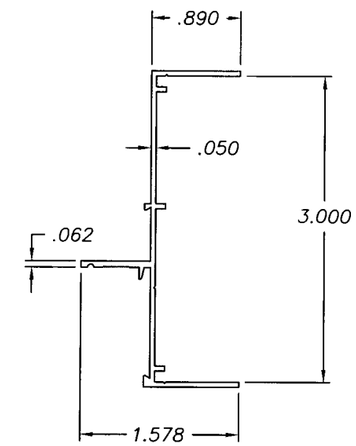

(35) SIDELITE JAMB
6063–T6 ALUM.

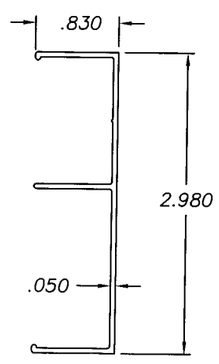

(40) SIDELITE JAMB ADAPTER
6063–T6 ALUM.

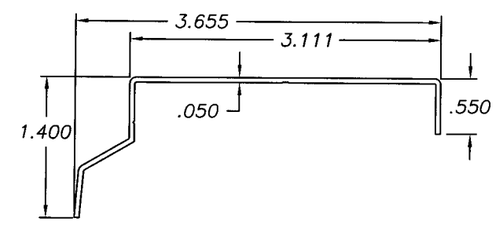

A (47) FILLER HEAD ADAPTER
6063–T6 ALUM.

PRODUCT REVISED
in complying with the Florida
Building Code
Acceptance No. 06-0807.07
Expiration Date FEB 13, 2008
By Ishaq I. Unandu
Miami Dade Product Control
Division

9/22/06
Robert L. Clark, P.E.
PE #39712
Structural

PGT INDUSTRIES

1070 TECHNOLOGY DRIVE
NOKOMIS, FL 34275

P.O. BOX 1529
NOKOMIS, FL 34274

Revsd By:	Date:	Revisions:
F.K.	7/15/06	E–UPGRADE ALLOY, ALL
F.K.	9/22/06	F–ADD ITEM 47
Drawn By: F.K.	Date: 9/9/02	

Description: EXTRUSIONS PROFILES, SIDELITES

Title: ALUMINUM FRENCH DOOR W/ SIDELITES

Series/Model:	Scale:	Sheet:	Drawing No.	Rev:
FD–101	NTS	8 of 9	972	F

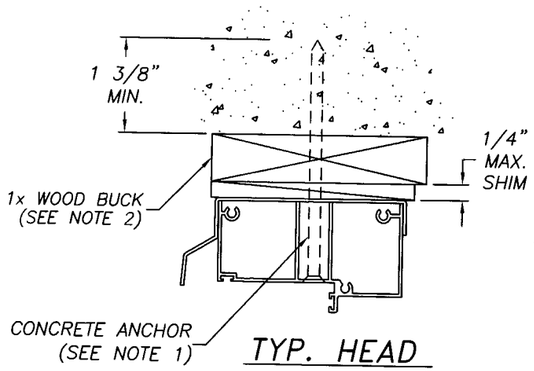

TYP. HEAD

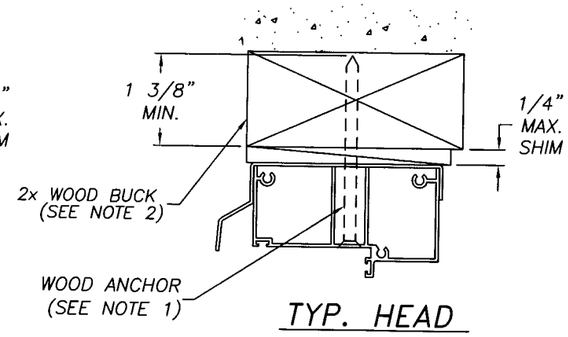

TYP. HEAD

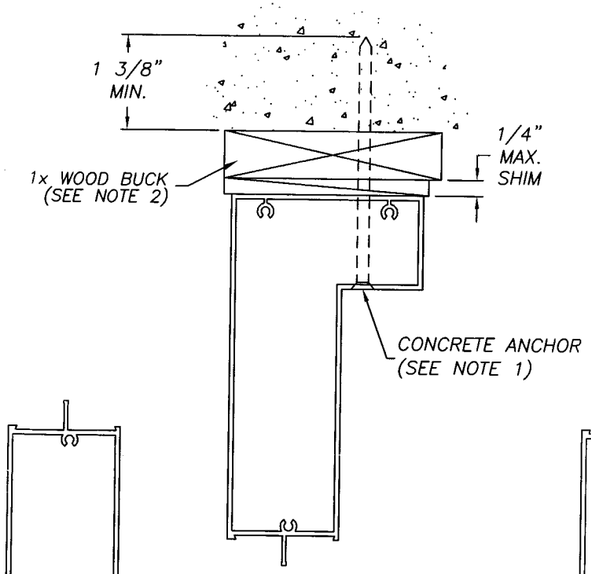

TYP. SIDELITE HEAD

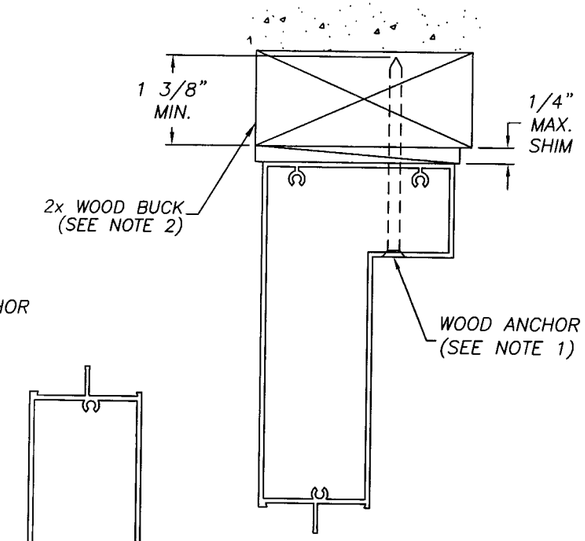

TYP. SIDELITE HEAD

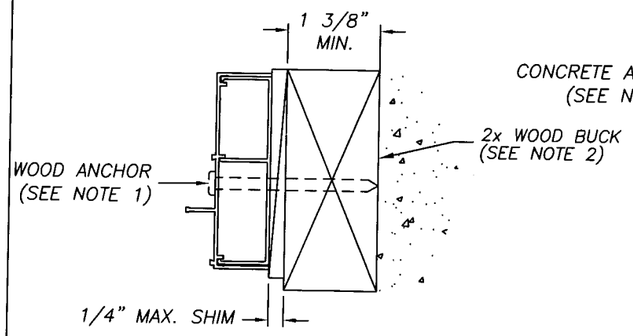

TYP. JAMB

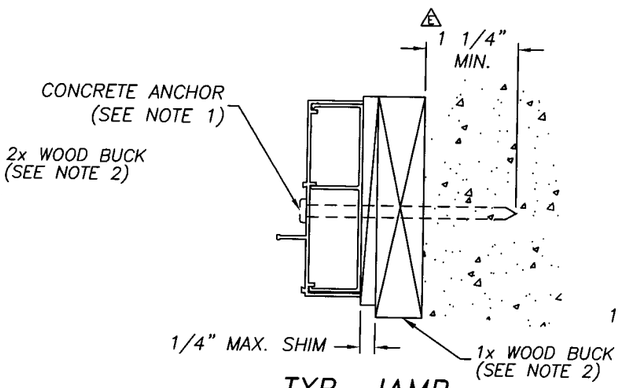

TYP. JAMB

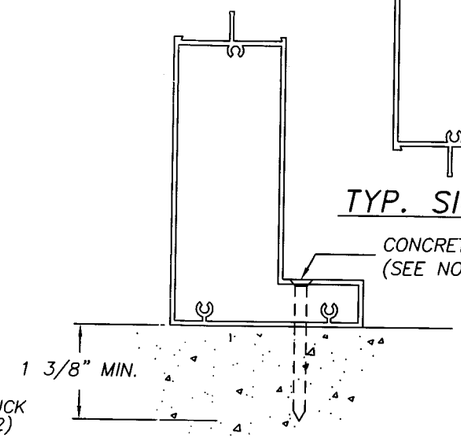

TYP. SIDELITE SILL

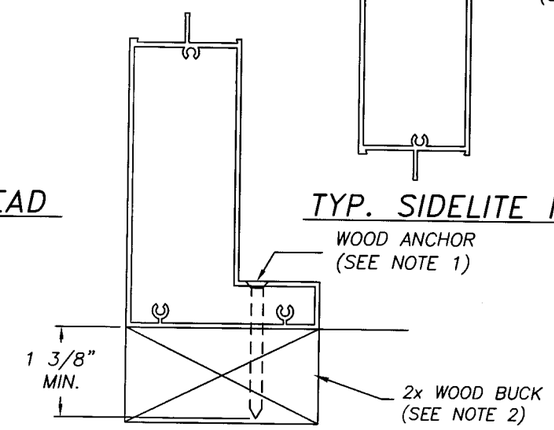

TYP. SIDELITE SILL

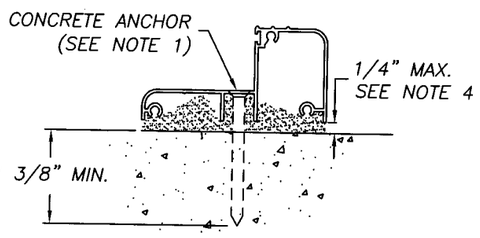

TYP. SILL

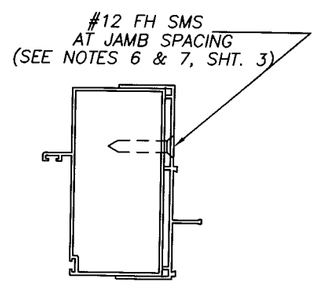

TYP. JAMB/SIDELITE

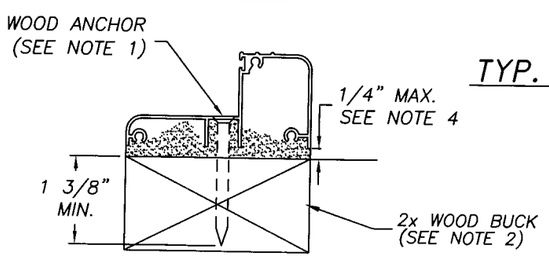

TYP. SILL

NOTES:

1. FOR CONCRETE APPLICATIONS IN MIAMI–DADE COUNTY, USE ONLY MIAMI–DADE COUNTY APPROVED 1/4" ELCO TAPCONS OR 1/4 SS4 CRETE–FLEX. FOR WOOD APPLICATIONS USE #12 STEEL SCREWS (G5), 1/4" ELCO TAPCONS OR 1/4" SS4 CRETE–FLEX. MINIMUM DISTANCE FROM ANCHOR TO CONCRETE EDGE IS 1 3/4". SEE SHEET 3 FOR ANCHOR SPACING DETAILS. FLATHEAD ANCHORS, WHERE REQUIRED, TO BE #12 TRIMFIT HEAD.
2. WOOD BUCKS DEPICTED IN THE SECTIONS ON THIS PAGE AS 1x ARE BUCKS WHOSE TOTAL THICKNESS IS LESS THAN 1 1/2". WOOD BUCKS DEPICTED AS 2x ARE 1 1/2" THICK OR GREATER. INSTALLATION TO THE SUBSTRATE OF WOOD BUCKS TO BE ENGINEERED BY OTHERS OR AS APPROVED BY AUTHORITY HAVING JURISDICTION.
3. WOOD BUCKS LESS THAN 1 1/2" THICK ARE OPTIONAL (PRODUCT MAY BE INSTALLED DIRECTLY TO CONCRETE).
4. IF SILL IS TIGHT TO SUBSTRATE, GROUT OR OTHER MATERIAL IS NOT REQUIRED. IF USED, GROUT OR OTHER MAT'L (DONE BY OTHERS) MUST FULLY SUPPORT THE ENTIRE LENGTH OF THE SILL THAT IS NOT TIGHT TO THE SUBSTRATE, AND TRANSFER SHEAR LOAD TO SUBSTRATE.

PRODUCT REVISED
as complying with the Florida Building Code
Acceptance No. 06-0807.07
Expiration Date FEB 13, 2008
By Ishaq I. Lhauda
Miami Dade Product Control Division

9/27/06
Robert L. Clark, P.E.
PE #39712
Structural

PGT INDUSTRIES
1070 TECHNOLOGY DRIVE
NOKOMIS, FL 34275
P.O. BOX 1529
NOKOMIS, FL 34274

Revsd By:	Date:	Revisions:
F.K.	7/15/06	E–REVISE ANCHORAGE
F.K.	9/22/06	F–NOTE 1 EDGE DIST.
D.B.	7/12/99	

Description: ANCHORAGE

Title: ALUMINUM FRENCH DOOR W/ SIDELITES

Series/Model:	Scale:	Sheet:	Drawing No.	Rev:
FD–101	NTS	9 of 9	972	F