MIAMI-DADE COUNTY
BUILDING CODE COMPLIANCE OFFICE (BCCO)
PRODUCT CONTROL DIVISION

MIAMI-DADE COUNTY, FLORIDA
METRO-DADE FLAGLER BUILDING

140 WEST FLAGLER STREET, SUITE 1603
MIAMI, FLORIDA 33130-1563
(305) 375-2901 FAX (305) 375-2908
www.miamidade.gov

NOTICE OF ACCEPTANCE (NOA)

Rolladen, Inc.
550 Ansin Boulevard
Hallandale, Florida 33009

SCOPE:

This NOA is being issued under the applicable rules and regulations governing the use of construction materials. The documentation submitted has been reviewed by Miami-Dade County Product Control Division and accepted by the Board of Rules and Appeals (BORA) to be used in Miami Dade County and other areas where allowed by the Authority Having Jurisdiction (AHJ).

This NOA shall not be valid after the expiration date stated below. The Miami-Dade County Product Control Division (In Miami Dade County) and/or the AHJ (in areas other than Miami Dade County) reserve the right to have this product or material tested for quality assurance purposes. If this product or material fails to perform in the accepted manner, the manufacturer will incur the expense of such testing and the AHJ may immediately revoke, modify, or suspend the use of such product or material within their jurisdiction. BORA reserves the right to revoke this acceptance, if it is determined by Miami-Dade County Product Control Division that this product or material fails to meet the requirements of the applicable building code.

This product is approved as described herein, and has been designed to comply with the High Velocity Hurricane Zone of the Florida Building Code.

DESCRIPTION: Extruded Aluminum Storm Panels Shutter

APPROVAL DOCUMENT: Drawing No. 94-51, titled " Extruded Aluminum Storm Panel Details ", sheets 1 through 5 of 5, prepared by Al-Farooq Corporation, dated July 7, 1994, last revision #J dated November 28, 2006, signed and sealed by Humayoun Farooq, P.E., bearing the Miami-Dade County Product Control Revision stamp with the Notice of Acceptance number and expiration date by the Miami-Dade County Product Control Division.

MISSILE IMPACT RATING: Large and Small Missile Impact

LABELING: Each panel shall bear a permanent label with the manufacturer's name or logo, city, state and the following statement: "Miami-Dade County Product Control Approved", unless otherwise noted herein.

RENEWAL of this NOA shall be considered after a renewal application has been filed and there has been no change in the applicable building code negatively affecting the performance of this product.

TERMINATION of this NOA will occur after the expiration date or if there has been a revision or change in the materials, use, and/or manufacture of the product or process. Misuse of this NOA as an endorsement of any product, for sales, advertising or any other purposes shall automatically terminate this NOA. Failure to comply with any section of this NOA shall be cause for termination and removal of NOA.

ADVERTISEMENT: The NOA number preceded by the words Miami-Dade County, Florida, and followed by the expiration date may be displayed in advertising literature. If any portion of the NOA is displayed, then it shall be done in its entirety.

INSPECTION: A copy of this entire NOA shall be provided to the user by the manufacturer or its distributors and shall be available for inspection at the job site at the request of the Building Official.

This NOA **revises NOA # 03-0527.01** and consists of this page 1, evidence submitted pages E-1, E-2, & E-3 as well as approval document mentioned above.

The submitted documentation was reviewed by **Helmy A. Makar, P.E., M.S.**

PRODUCT CONTROL ACCEPTED

Helmy A. Makar
12/28/2006

NOA No 06-0818.01
Expiration Date: 09/16/2008
Approval Date: 12/28/2006

Rolladen, Inc.

NOTICE OF ACCEPTANCE: EVIDENCE SUBMITTED

1. EVIDENCE SUBMITTED UNDER PREVIOUS APPROVAL # 97-0721.02

A. DRAWINGS:

1. *Drawing No. 94-51, Rolladen, Inc., "Storm Panel Details", Sheets 1 through 4 of 4, prepared by Al-Farooq Corporation, dated July 7, 1994, with Revision No. D, dated April 4, 1995, signed and sealed by Humayoun Farooq, P.E.*

B. TESTS:

1. *Test report on Large Missile Impact Test, per PA 201-94, of extruded aluminum storm panels, (50" x 145" panel) prepared by Hurricane Engineering & Testing Inc., Report No. HETI-95-430, dated March 15, 1995, signed and sealed by Hector M. Medina, P.E.*
2. *Test report on Large Missile Impact Test, per PA 201-94, of extruded aluminum storm panels, (50" x 131" panel) prepared by Hurricane Engineering & Testing Inc., Report No. HETI-94-367i, dated December 1, 1994, signed and sealed by Hector M. Medina, P.E.*
3. *Test report on Large Missile Impact Test and Cyclic Wind Pressure Test, per PA 201-94 and PA 203-94, of extruded aluminum storm panels, Samples I, II and IV, (39" x 96.5") and Sample III, (39" x 91") prepared by Hurricane Engineering & Testing Inc., Report No. HETI-94-146, dated June 14, 1994, signed and sealed by Arshad Viqar, P.E.*
4. *Test report on Uniform Static Air Pressure Test, per PA 202-94, of extruded aluminum storm panels, (40" x 97"), prepared by Hurricane Engineering & Testing Inc., Report No: HETI-94-338, dated October 14, signed and sealed by Hector M. Medina, P.E.*
5. *Test report on Uniform Static Air Pressure Test, per PA 202-94, of extruded aluminum storm panels, (39" x 96.5"), prepared by Hurricane Engineering & Testing Inc., Report No: HETI-94-144, dated June 13, 1994, signed and sealed by Arshad Viqar, P.E.*
6. *Test report on Uniform Static Air Pressure Test, per PA 202-94, of extruded aluminum storm panels, Sample I, (39 3/8" x 108"); Sample II, (50" x 131"); and Sample III, (97" x 170"); prepared by Hurricane Engineering & Testing Inc., Report No: HETI-94-367, dated November 9, 1994, signed and sealed by Hector M. Medina, P.E.*

C. CALCULATIONS:

1. *Comparative analysis and anchor calculations, Pages D1, R1-R14, S1-S4, A1-A17, G1-G10 & AP1-AP11, prepared by Al-Farooq Corporation, dated December 21, 1994, signed and sealed by Humayoun Farooq, P.E.*

Helmy A. Makar, P. E., M.S.
Product Control Examiner
NOA No 06-0818.01
Expiration Date: 09/16/2008
Approval Date: 12/28/2006

NOTICE OF ACCEPTANCE: EVIDENCE SUBMITTED

D. MATERIAL CERTIFICATION:

1. *Certified Inspection Report from mill, prepared by the William L. Bonnell Co., dated July 18, 1994, for aluminum alloy 6063-T6.*
2. *Certified Tensile Test Report No. HETI-94-T11, prepared by Hurricane Engineering & Testing Inc., dated July 29, 1994.*

2. EVIDENCE SUBMITTED UNDER PREVIOUS APPROVAL # 00-0609.07

A. DRAWINGS

1. *None.*

B. TESTS

1. *None.*

C. CALCULATIONS

1. *None.*

D. MATERIAL CERTIFICATIONS

1. *None.*

E. STATEMENTS

1. *Letter by Al-Farooq Corporation, dated March 9, 2000, signed and sealed by Humayoun Farooq, P.E., certifying that he is still in the engineering business.*
2. *Letter by Rolladen, Inc., dated May 22, 2000, signed by Terry D. Low, certifying that no changes or alterations have been made to the Product Approval #94-1230.03.*

3. EVIDENCE SUBMITTED UNDER PREVIOUS APPROVAL #03-0527.01

A. DRAWINGS:

1. *Drawing No. 94-51, titled " Storm Panel Details ", sheets 1 through 4 of 4, prepared by Al-Farooq Corporation, dated July 7, 1994, last revision #H dated August 28, 2003, signed and sealed by Humayoun Farooq, P.E. on August 29, 2003.*

B. TESTS:

1. *None.*

C. CALCULATIONS:

1. *Anchor calculations, 40 Pages, prepared by Al-Farooq Corporation, dated April 18, 2003, signed and sealed by Humayoun Farooq, P.E.*

Helmy A. Makar, P. E., M.S.
Product Control Examiner
NOA No 06-0818.01
Expiration Date: 09/16/2008
Approval Date: 12/28/2006

NOTICE OF ACCEPTANCE: EVIDENCE SUBMITTED

D. QUALITY ASSURANCE

1. By Miami-Dade County Building Code Compliance Office.

E. MATERIAL CERTIFICATION:

1. None.

4. NEW EVIDENCE SUBMITTED

A. DRAWINGS:

1. Drawing No. 94-51, titled " Extruded Aluminum Storm Panel Details ", sheets 1 through 5 of 5, prepared by Al-Farooq Corporation, dated July 7, 1994, last revision #J dated November 28, 2006, signed and sealed by Humayoun Farooq, P.E.

B. TESTS:

1. None.

C. CALCULATIONS:

1. Anchor calculations, 79 Pages, prepared by Al-Farooq Corporation, dated June 28, 2006, signed and sealed by Humayoun Farooq, P.E.

D. QUALITY ASSURANCE

1. By Miami-Dade County Building Code Compliance Office.

E. MATERIAL CERTIFICATION:

1. None.

Helmy A. Makar, P. E., M.S.
Product Control Examiner
NOA No 06-0818.01
Expiration Date: 09/16/2008
Approval Date: 12/28/2006

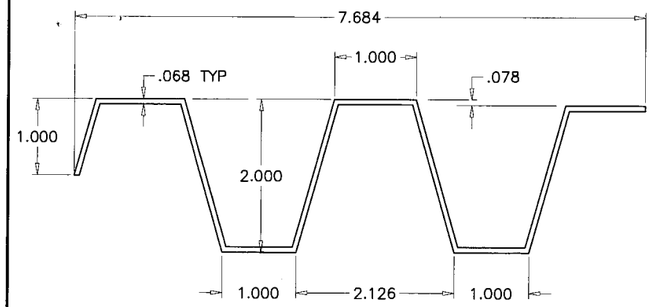

EXTRUDED PANEL (RON 59 A)
ALUMINUM .068
6063–T6

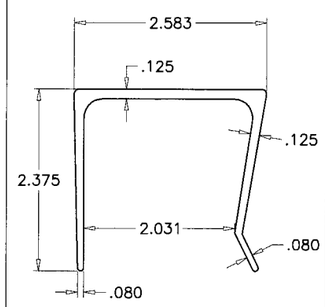

CEILING MOUNT HEADER
6063–T6

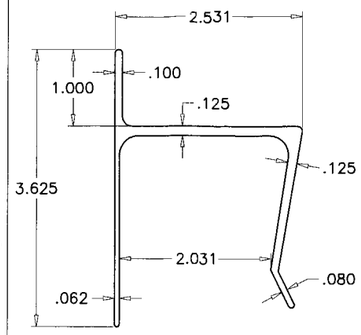

WALL MOUNT HEADER
6063–T6

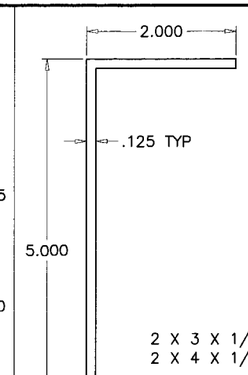

BUILT–OUT ANGLES
6063–T6

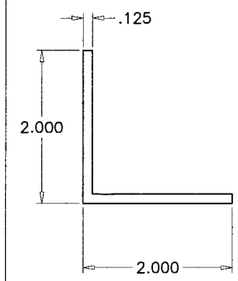

SILL ANGLE
6063–T6

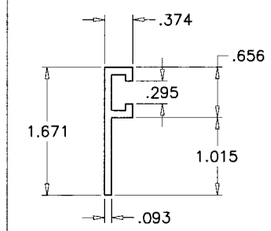

'F' TRACK
6063–T6

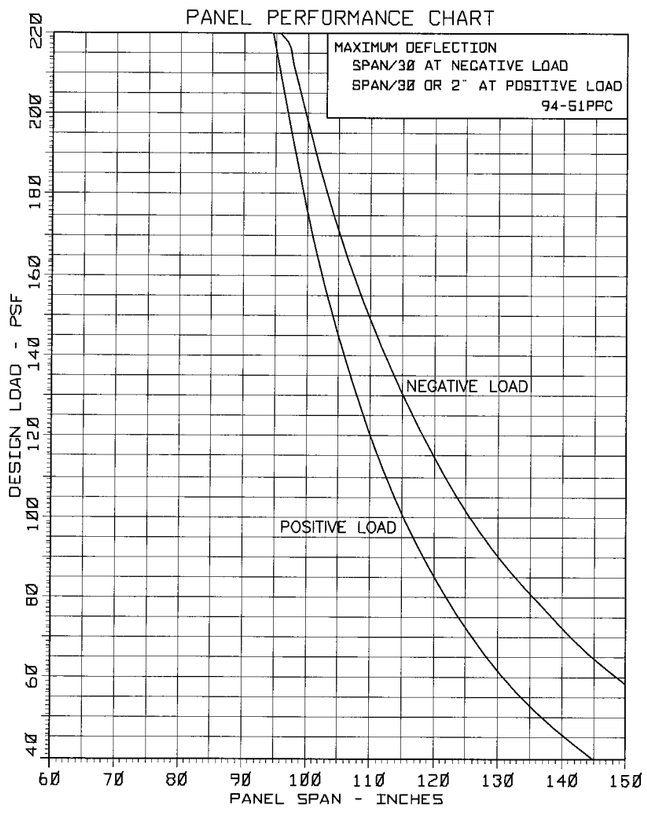

USE SLAT PERFORMANCE CHART TO VERIFY PANEL CAPACITY FOR THE REQUIRED DESIGN LOAD FOR THE PARTICULAR LOCATION. USE SPAN DEFLECTION CHART TO CALCULATE SEPARATION FROM GLASS.

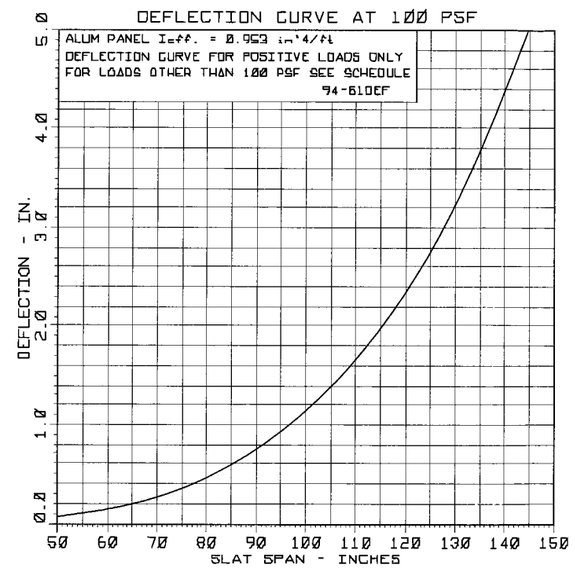

MINIMUM SEPARATION FROM GLASS

INSTALLATIONS ABOVE 30' OF GRADE		SEPARATION FOR INSTALLATIONS UPTO 30 FT. OF GRADE DUE TO LARGE MISSILE IMPACT	
		PANEL SPAN UPTO	SEPARATION
SHUTTER SPAN = H =	IN.		
DESIGN LOAD = Pd =	PSF		
FACTOR = K = Pd/100 =	IN.		
READING FROM SPAN DEFLECTION CURVE = D =	IN.	96–1/2"	2–1/4"
DEFLECTION AT Pd = K*D =	IN.	131"	3–3/4"
MIN. SEPARATION REQD. = K*D+1" =	IN.	145"	5–1/2"

FOR INSTALLATIONS UPTO 30' OF GRADE USE MAXIMUM OF WIND LOAD OR IMPACT LOAD REQUIREMENTS SHOWN ABOVE

FOR INSTALLATIONS ABOVE 30' OF GRADE IGNORE LARGE MISSILE IMPACT REQUIREMENT.

NOTE: NO PART OF SHUTTER SHALL BE UNDER 30' ABOVE GRADE TO WAIVE LARGE MISSILE IMPACT REQUIREMENT.

GENERAL NOTES

1. THIS PRODUCT HAS BEEN DESIGNED AND TESTED TO COMPLY WITH THE REQUIREMENTS OF THE FLORIDA BUILDING CODE 2004 EDITION INCLUDING HIGH VELOCITY HURRICANE ZONE (HVHZ).
2. DESIGN CRITERIA FOR ALUMINUM, MINIMUM MECHANICAL PROPERTIES, AND SAFETY FACTORS ARE IN ACCORDANCE WITH THE "ALUMINUM CONSTRUCTION MANUAL" LATEST EDITION.
3. ALUMINUM ALLOYS: ALL EXTRUSIONS SHALL BE ALLOY AS SHOWN .
4. STEEL SURFACES TO BE PLACED IN CONTACT WITH ALUMINUM SHALL BE GIVEN ONE COAT OF ZINC CHROMATE PRIMER IN ACCORDANCE WITH FEDERAL SPEC. NO. TTP–645, OR BE GALVANIZED.
5. ANCHORS SHALL BE AS SHOWN ON DETAILS. ANCHOR EMBEDMENT TO BASE MATERIAL SHALL BE BEYOND WALL DRESSING OR STUCCO.
6. ALL BOLTS SHALL BE STAINLESS STEEL, ALUMINUM ALLOY 2024–T4 OR 7075–T6, OR PLATED STEEL. WING NUTS TO BE OF ZINC ALLOY.
7. DESIGN CRITERIA FOR PANELS: MAX DEFLECTION < L/30 FOR NEGATIVE LOAD AND THE LESSER OF L/30 OR 2" FOR POSITIVE LOAD.
8. ANCHORING OR LOADING CONDITIONS OTHER THAN THOSE SHOWN IN THESE DETAILS ARE NOT PART OF THIS APPROVAL. .
9. A LOAD DURATION INCREASE IN ALLOWABLE STRESS IS USED IN DESIGN OF ANCHORS INTO WOOD ONLY.
10. MATERIALS INCLUDING BUT NOT LIMITED TO STEEL/METAL SCREWS, THAT COME INTO CONTACT WITH OTHER DISSIMILAR MATERIALS SHALL MEET THE REQUIREMENTS OF 2004 FLORIDA BLDG. CODE SECTION 2003.8.4 (SUPPLEMENT 2005).

DESIGN LOADS SHALL BE CALCULATED AS PER REQUIREMENTS OF ASCE 7–02.

PRODUCT REVISED
as complying with the Florida
Building Code
Acceptance No 06-0818.01
Expiration Date 09/16/2008
By Helena A. Mola
Miami Dade Product Control
Division

PRODUCT MARKING

A LABEL SHALL BE AFFIXED AT BOTTOM OF EACH PANEL WITH THE FOLLOWING STATEMENT.

ROLLADEN INC. HALLANDALE, FL.
ALUMINUM STORM PANEL
"MIAMI–DADE COUNTY PRODUCT CONTROL APPROVED"

Engr: DR. HUMAYOUN FAROOQ
STRUCTURES
FLA. PE # 16557
C.A.N. 3538

NOV 30 2006

FOR INSTALLATION DETAILS SEE SHEETS 2 THRU 4.

AL-FAROOQ CORPORATION
ENGINEERS & PRODUCT DEVELOPMENT
1235 S.W. 87 AVE
MIAMI, FLORIDA 33174
TEL. (305) 264-8100 FAX. (305) 262-6978

PANELS/94–51RNI–NEW

EXTRUDED ALUMINUM STORM PANEL DETAILS

ROLLADEN INC.
550 ANSIN BLVD.
HALLANDALE, FL. 33009
TEL. (954) 757–8591 FAX. (954) 454–1577

revisions:

no	date	by	description
F	4.10.98	H	GENERAL REVISION
G	4.21.03	H	UPDATED FOR FBC & NDS 97
H	8.28.03	H	REV. PER BCCO COMMENTS
I	05.02.06	H	UPDATED FOR 2004 FBC
J	11.28.06	H	REV. PER BCCO COMMENTS

date: 07–07–94
scale: 1/2" = 1"
dr. by: HAMID
chk. by:

drawing no.
94–51

sheet 1 of 5

WALL MOUNTS

ANCHOR TYPE	CHART TO USE CONC.	BLOCK	WOOD	METAL
A	4	2	–	–
B	2	–	–	–
C	2	2	–	–
D	4	1	–	–
E	–	–	4	–
G	–	–	–	2

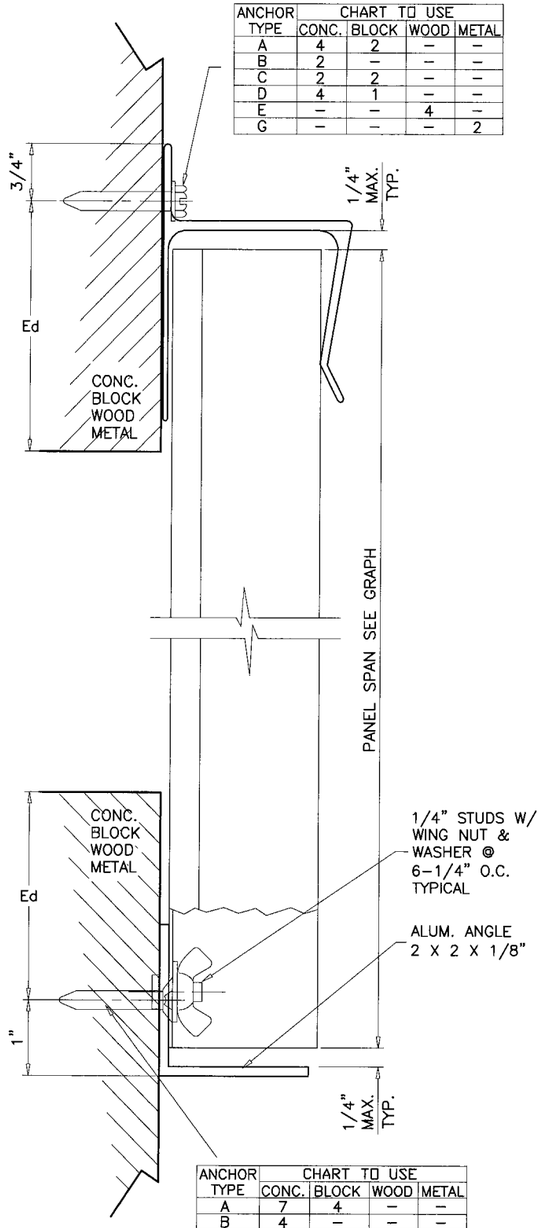

ANCHOR TYPE	CHART TO USE CONC.	BLOCK	WOOD	METAL
A	7	4	–	–
B	4	–	–	–
C	5	4	–	–
D	7	3	–	–
E	–	–	7	–
G	–	–	–	5

SECTION A–A

INSIDE MOUNTS

ANCHOR TYPE	CHART TO USE CONC.	BLOCK	WOOD	METAL
A	5	3	–	–
B	2	–	–	–
C	4	3	–	–
D	5	3	–	–
E	–	–	4	–
G	–	–	–	4

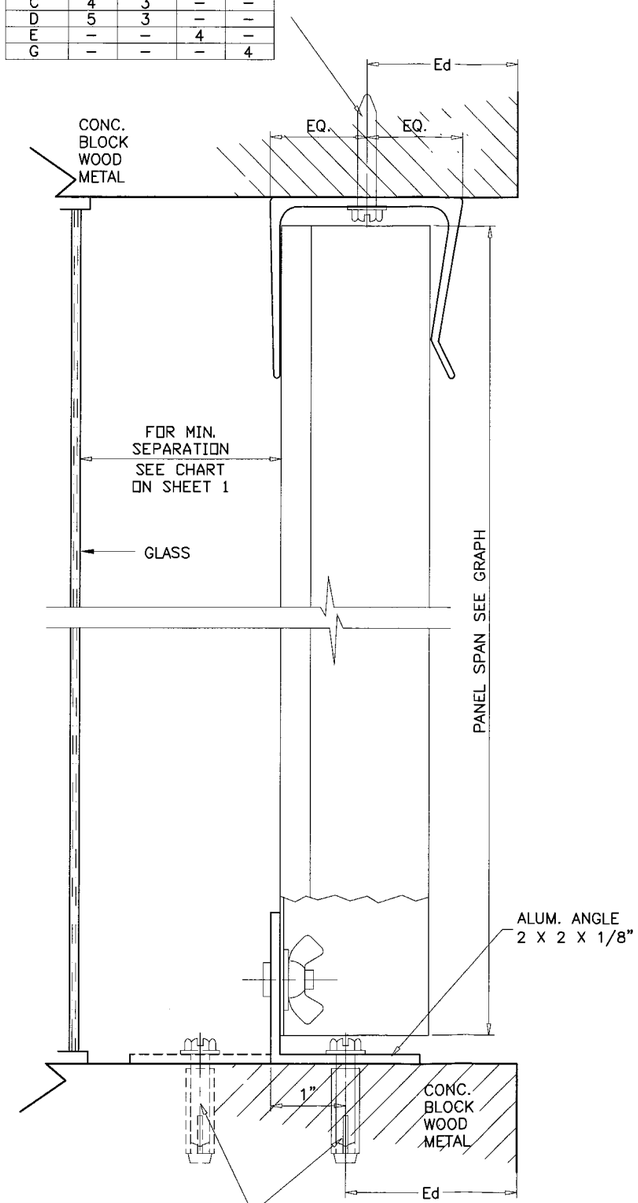

ANCHOR TYPE	CHART TO USE CONC.	BLOCK	WOOD	METAL
A	6	4	–	–
B	3	–	–	–
C	4	3	–	–
D	6	3	–	–
E	–	–	4	–
G	–	–	–	4

SECTION B–B

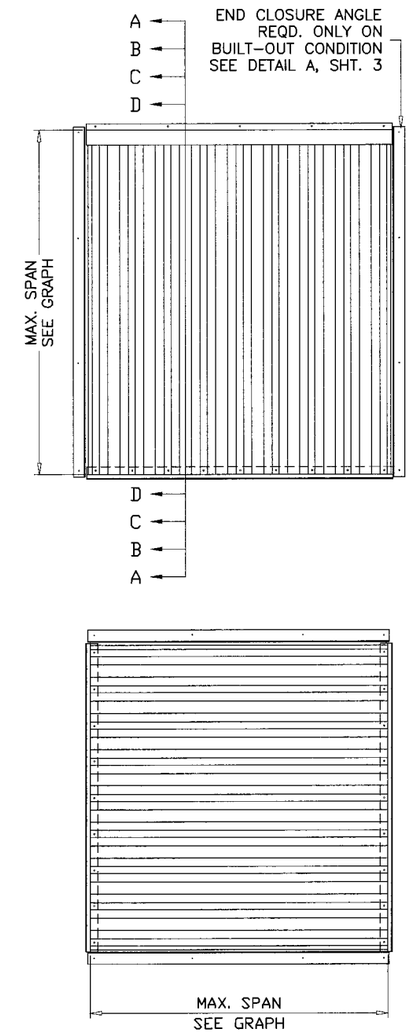

TYPICAL ELEVATION

PANELS CAN BE INSTALLED VERTICALLY OR HORIZONTALLY USING APPLICABLE ANCHORING DETAILS.

PRODUCT REVISED as complying with the Florida Building Code
Acceptance No 06-0818.01
Expiration Date 09/16/2008
By Helmy A. Mahler
Miami Dade Product Control Division

ANCHORS: EMBEDMENT & EDGE DISTANCES SHOWN ARE BEYOND THE WALL & FLOOR COVERING (STUCCO, TILES, ETC.)

Ed = TYPICAL EDGE DISTANCE
CONC. & BLOCK = 12d (12 ANCHOR DIAMETERS)
WOOD = 5d
FOR LESSER EDGE DISTANCES SEE SHEET 5 OF 5.

HEADER AND SILL DETAILS CAN BE USED IN ANY COMBINATIONS.

FOR GENERAL NOTES AND EXTRUSION DETAILS SEE SHEET 1 OF 5.
FOR WOOD INSTALLATIONS SEE SHEET 4 OF 5.

Engr: DR. HUMAYOUN FAROOQ
STRUCTURES
FLA. PE # 16557
C.A.N. 3538
NOV 30 2006

AL-FAROOQ CORPORATION
ENGINEERS & PRODUCT DEVELOPMENT
1235 S.W. 87 AVE
MIAMI, FLORIDA 33174
TEL. (305) 264-8100 FAX. (305) 262-6978

PANELS/94-51RNI-NEW

EXTRUDED ALUMINUM STORM PANEL DETAILS

ROLLADEN INC.
550 ANSIN BLVD.
HALLANDALE, FL. 33009
TEL. (954) 757-8591 FAX. (954) 454-1577

revisions:

no	date	by	description
I	05.02.06	H	UPDATED FOR 2004 FBC
J	11.28.06	H	NO CHANGE THIS SHEET

date: 07-07-94
scale: 1/2" = 1"
dr. by: HAMID
chk. by:

drawing no. 94-51

BUILT-OUT CONDITION

ANCHOR TYPE	CHART TO USE CONC.	BLOCK	WOOD	METAL
A	4	2	–	–
B	2	–	–	–
C	3	2	–	–
D	5	2	–	–
E	–	–	5	–
G	–	–	–	2

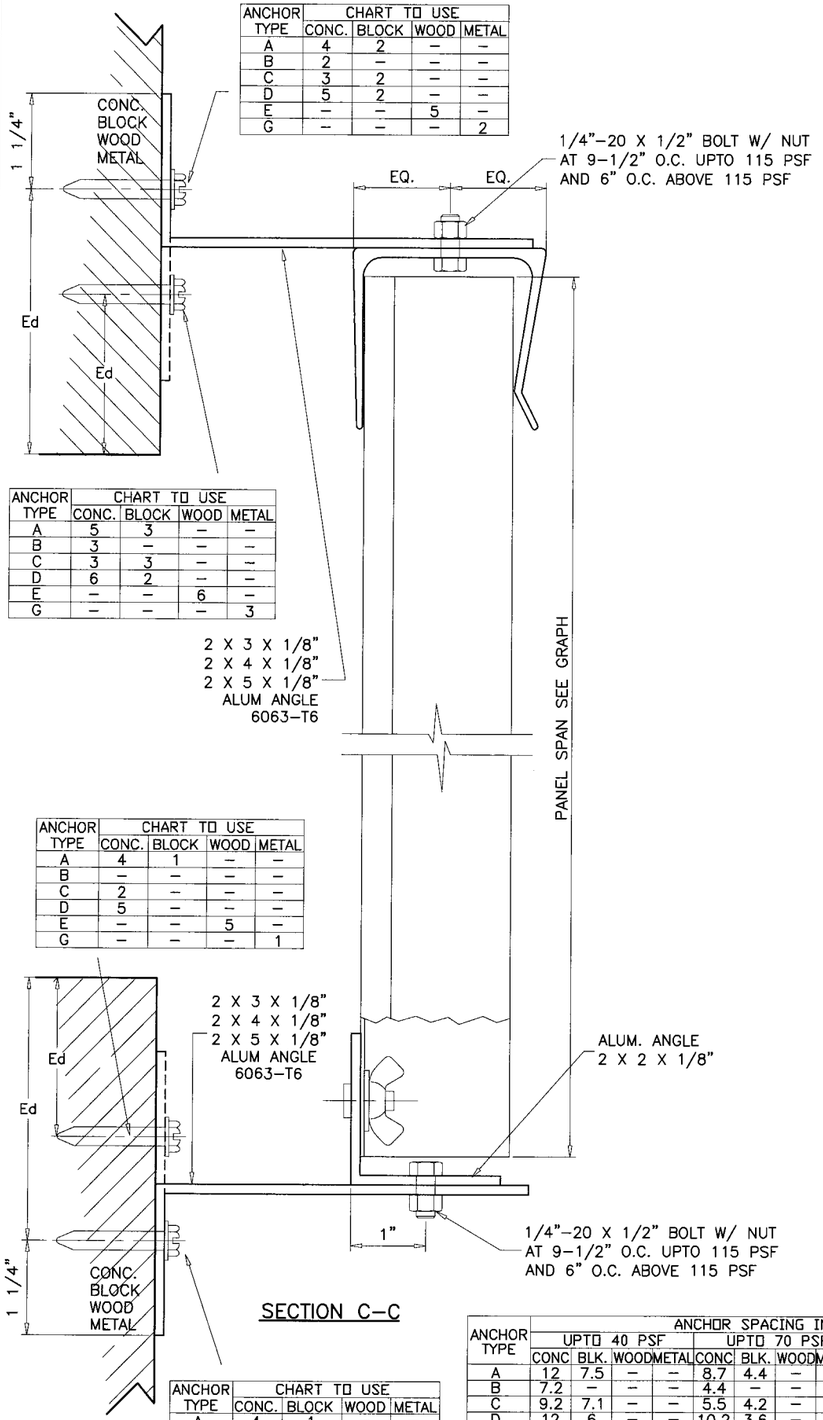

ANCHOR TYPE	CHART TO USE CONC.	BLOCK	WOOD	METAL
A	5	3	–	–
B	3	–	–	–
C	3	3	–	–
D	6	2	–	–
E	–	–	6	–
G	–	–	–	3

ANCHOR TYPE	CHART TO USE CONC.	BLOCK	WOOD	METAL
A	4	1	–	–
B	–	–	–	–
C	2	–	–	–
D	5	–	–	–
E	–	–	5	–
G	–	–	–	1

SECTION C–C

ANCHOR TYPE	CHART TO USE CONC.	BLOCK	WOOD	METAL
A	4	1	–	–
B	–	–	–	–
C	2	1	–	–
D	5	–	–	–
E	–	–	4	–
G	–	–	–	2

ANCHOR TYPE	ANCHOR SPACING INCHES UPTO 40 PSF CONC	BLK.	WOOD	METAL	UPTO 70 PSF CONC	BLK.	WOOD	METAL	UPTO 100 PSF CONC	BLK.	WOOD	METAL
A	12	7.5	–	–	8.7	4.4	–	–	6.2	3.2	–	–
B	7.2	–	–	–	4.4	–	–	–	3.1	–	–	–
C	9.2	7.1	–	–	5.5	4.2	–	–	3.9	3	–	–
D	12	6	–	–	10.2	3.6	–	–	7.4	2.5	–	–
E	–	–	12	–	–	–	12	–	–	–	8.8	–
G	–	–	–	10.5	–	–	–	6.2	–	–	–	4.4

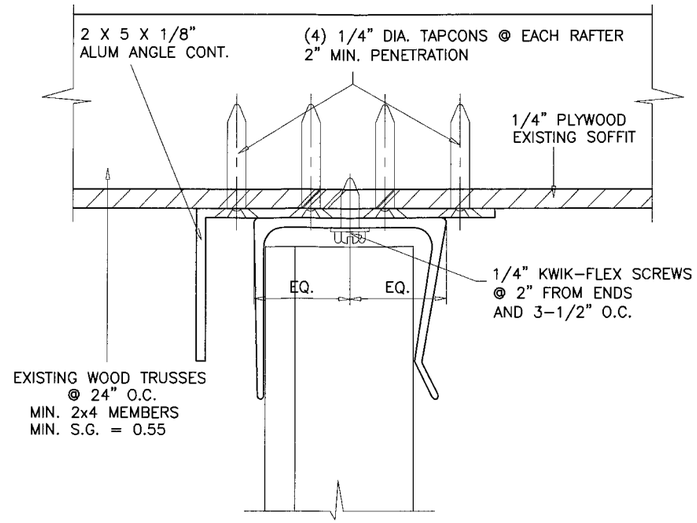

HEADER CONNECTION TO WOOD TRUSSES

FOR SHUTTER HEIGHT OF 108" MAX. DESIGN LOAD = 82 PSF
FOR SHUTTER HEIGHT OF 96" MAX. DESIGN LOAD = 92 PSF
FOR SHUTTER HEIGHT OF 84" MAX. DESIGN LOAD = 105 PSF

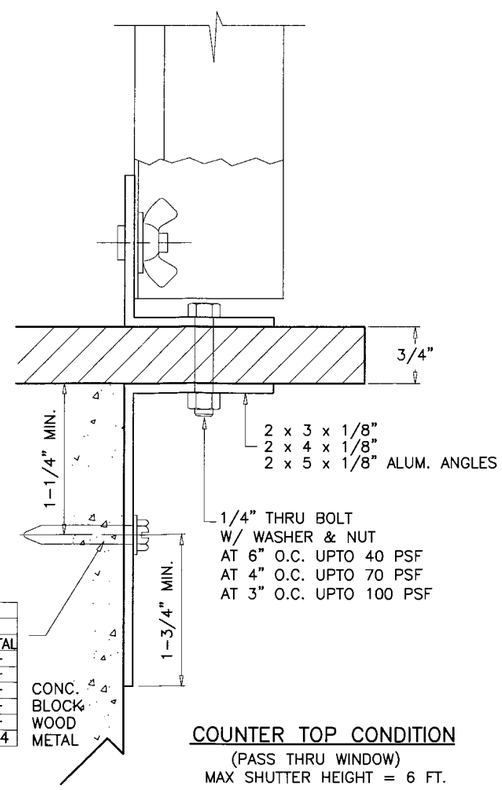

COUNTER TOP CONDITION

(PASS THRU WINDOW)
MAX SHUTTER HEIGHT = 6 FT.

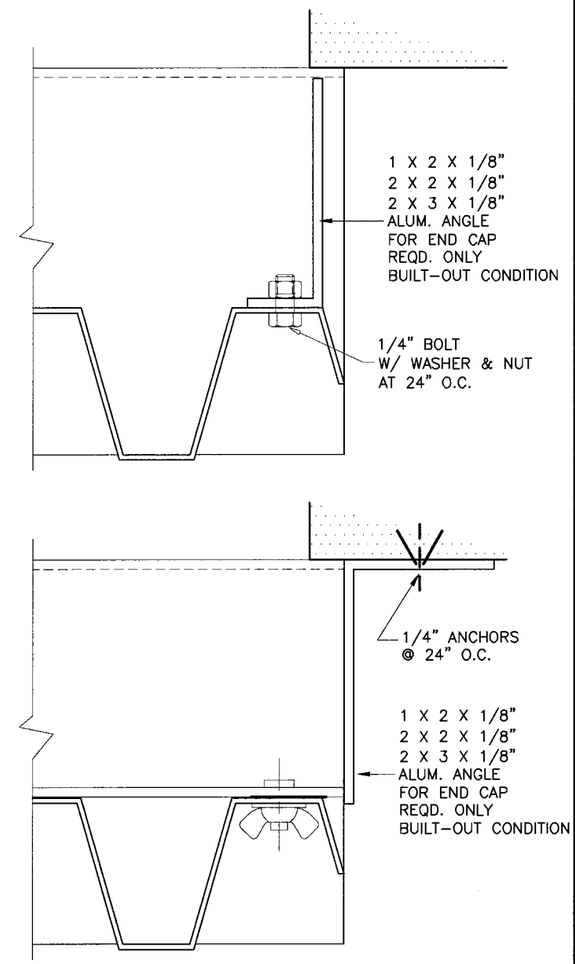

END CAP BUILT–OUT CONDITION

DETAIL 'A'

PRODUCT REVISED
as complying with the Florida
Building Code
Acceptance No. 06-0818.01
Expiration Date 09/16/2008
By Helena A. Alvarez
Miami Dade Product Control
Division

Engr: DR. HUMAYOUN FAROOQ
STRUCTURES
FLA. PE # 16557
C.A.N. 3538

NOV 30 2006

AL-FAROOQ CORPORATION
ENGINEERS & PRODUCT DEVELOPMENT
1235 S.W. 87 AVE
MIAMI, FLORIDA 33174
TEL. (305) 264-8100 FAX. (305) 262-6978

PANELS/94–51RNI–NEW

EXTRUDED ALUMINUM STORM PANEL DETAILS

ROLLADEN INC.
550 ANSIN BLVD.
HALLANDALE, FL. 33009
TEL. (954) 757-8591 FAX. (954) 454-1577

revisions:

no	date	by	description
I	05.02.06	H	UPDATED FOR 2004 FBC
J	11.28.06	H	REV. PER BCCO COMMENTS

date: 07-07-94
scale: 1/2" = 1"
dr. by: HAMID
chk. by:

drawing no.
94–51

sheet 3 of 5

ANCHOR TYPE	SPACING INCHES					
	UPTO 50 PSF			UPTO 70 PSF		
	CONC.	BLK.	WOOD	CONC.	BLK.	WOOD
A	9	8.1	–	9	6	–
B	7.8	–	–	5.9	–	–
C	9	7.7	–	7.4	5.7	–
D	9	6.5	–	9	4.8	–
E	–	–	9	–	–	9
G	–	–	8.9	–	–	6.6

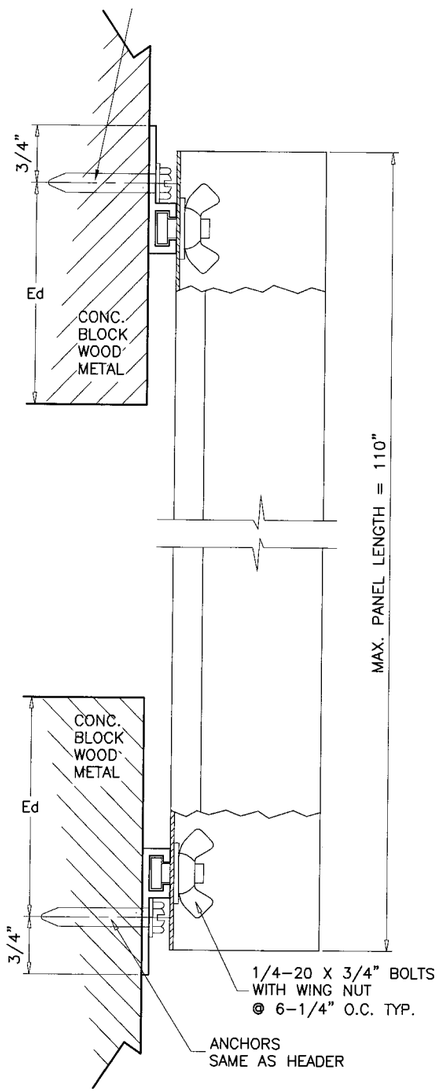

'F' TRACK INSTALLATION

LIMIT MAX. DESIGN LOADS TO ±70 PSF
LIMIT MAX. SHUTTER HEIGHT TO 110 INCHES

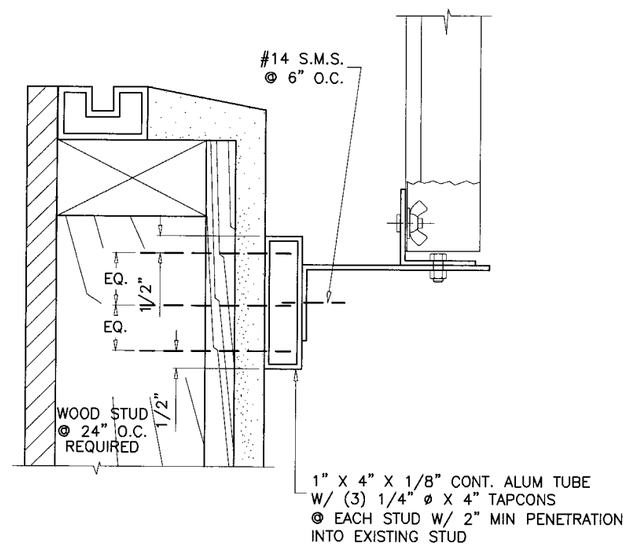

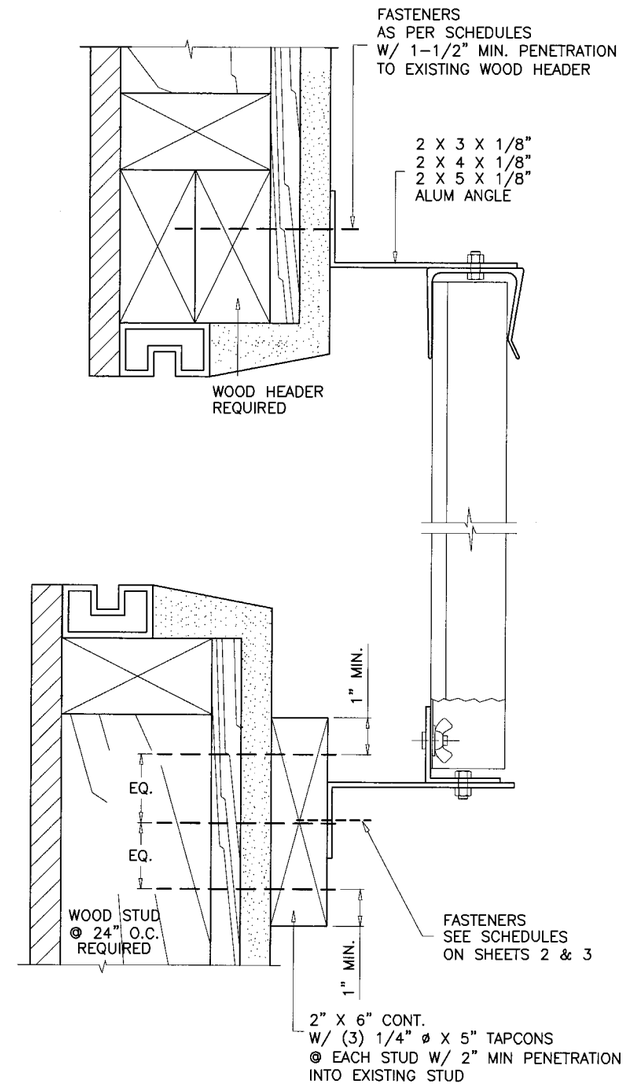

INSTALLATION DETAIL ON EXISTING WOOD STUDS SCALE : 1/4"=1"

FOR SHUTTER HEIGHT OF 120" MAX. DESIGN LOAD = 111 PSF
FOR SHUTTER HEIGHT OF 108" MAX. DESIGN LOAD = 126 PSF
FOR SHUTTER HEIGHT OF 96" MAX. DESIGN LOAD = 145 PSF

ABOVE DETAILS SHOWS CONNECTION OF 2X6 BUCK & 1X4 ALUM TUBE TO WOOD STUDS TO PROVIDE A CONTINUOUS SURFACE FOR SHUTTER INSTALLATION.

FOR INSTALLATION DETAILS OF HEADER/SILL TO CONTINUOUS WOOD MEMBERS SEE SHEETS 2 & 3.

PRODUCT REVISED
as complying with the Florida
Building Code
Acceptance No 06-0818.01
Expiration Date 09/16/2008
By
Miami Dade Product Control
Division

Engr: DR. HUMAYOUN FAROOQ
STRUCTURES
FLA. PE # 16557
C.A.N. 3538
NOV 30 2006

AL-FAROOQ CORPORATION
ENGINEERS & PRODUCT DEVELOPMENT
1235 S.W. 87 AVE
MIAMI, FLORIDA 33174
TEL. (305) 264-8100 FAX. (305) 262-6978

PANELS/94-51RNI-NEW

EXTRUDED ALUMINUM STORM PANEL DETAILS

ROLLADEN INC.
550 ANSIN BLVD.
HALLANDALE, FL. 33009
TEL. (954) 757-8591 FAX. (954) 454-1577

revisions:

no	date	by	description
I	05.02.06	H	UPDATED FOR 2004 FBC
J	11.28.06	H	NO CHANGE THIS SHEET

date: 07-07-94
scale: 1/2" = 1"
dr. by: HAMID
chk. by:

drawing no.
94-51

sheet 4 of 5

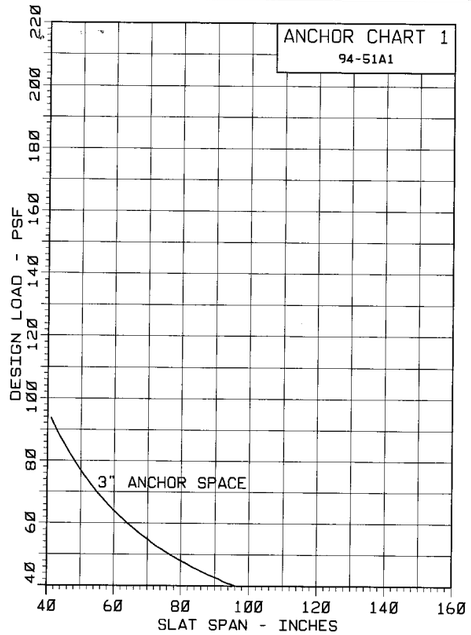

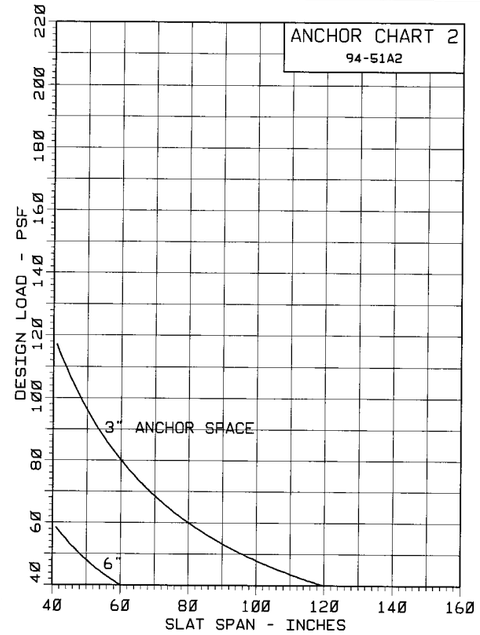

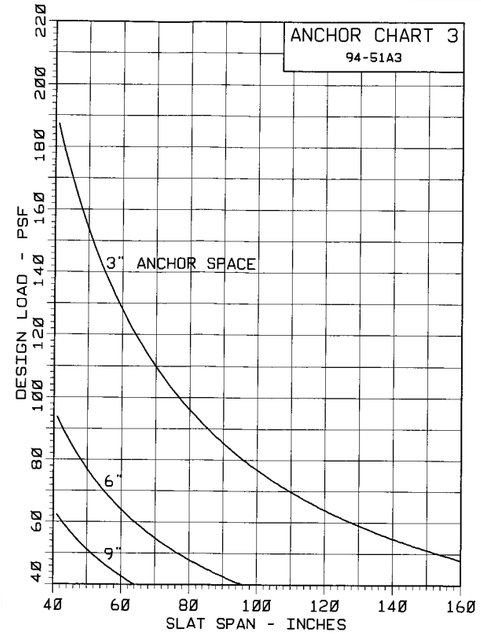

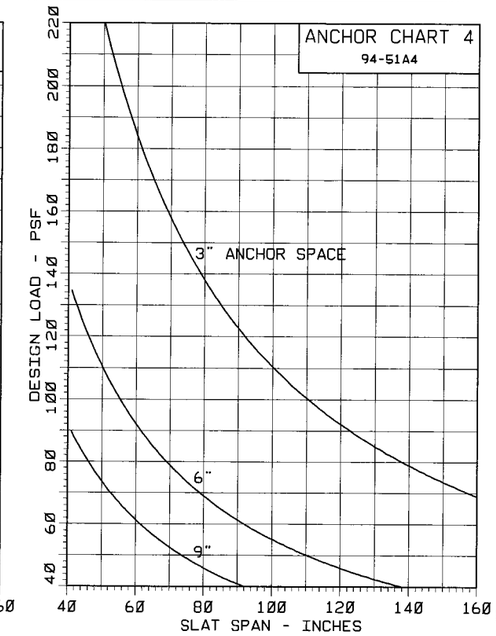

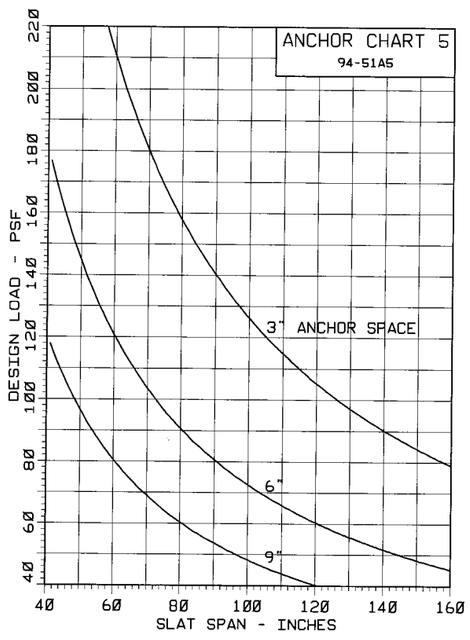

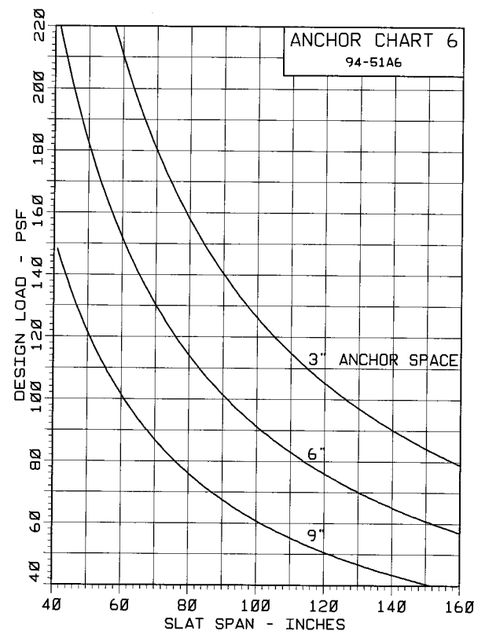

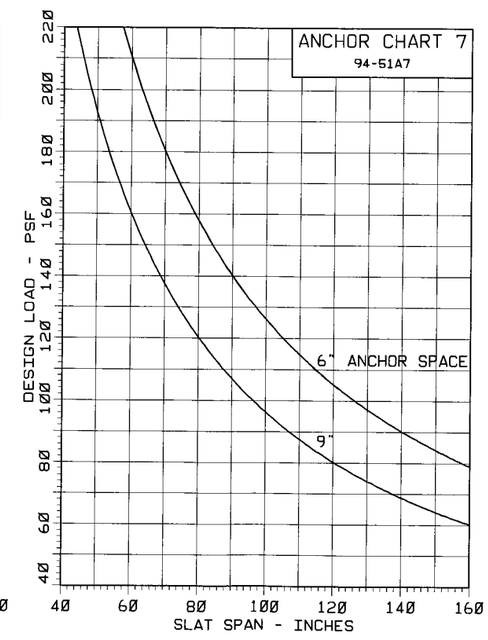

PRODUCT REVISED
as complying with the Florida
Building Code
Acceptance No. 06-0818.01
Expiration Date 09/16/2008
By Helmy A. Mek
Miami Dade Product Control
Division

TYPICAL ANCHORS:

ANCHOR (A) = 1/4" DIA. TAPCONS (BY ELCO) OR
EQUIV. CONC. ANCHOR HOLDING CURRENT N.O.A.
1-3/4" EMBEDMENT INTO 3000 PSI CONC.
1-1/4" EMBEDMENT INTO C-90 BLOCK

ANCHOR (B) = #14 SMS W/ RAWL SCRU-LEAD
1-1/2" EMBEDMENT INTO 3000 PSI CONC.

ANCHOR (C) = 1/4" ZAMAK NAILIN
1" EMBED. INTO 3000 PSI CONC. OR BLOCK

ANCHOR (D) = 1/4" RAWL CALK-IN
TOTAL ANCHOR BODY INTO 3000 PSI CONC.
OR C-90 BLOCK

ANCHOR (E) = 1/4" DIA. TAPCONS
1-1/2" MIN PENETRATION INTO WOOD(S.G.=0.55)

ANCHOR (G) = 1/4" DIA. KWIK-FLEX SELF DRILLING SCREWS
INTO METAL STRUCTURES
(STEEL OR ALUMINUM 1/8" MIN. THICK.)

NOTE: ANCHORS EMBEDMENT SHOWN IS BEYOND WALL & FLOOR COVERINGS (STUCCO, TILES, ETC.)

FASTENER SPACING IN MASONRY					
CHARTS ARE BASED ON TYPICAL EDGE DISTANCE = 12d. FOR LESSER EDGE DISTANCE DECREASE SPACING BY MULTIPLYING WITH THE FACTOR BELOW					
EDGE DIST.	12d=3"	10d=2-1/2"	8d=2"	6d=1-1/2"	5d=1-1/4"
FACTOR	1.00	0.86	0.71	0.57	0.50
EXAMPLE: FOR 3" EDGE DIST. SPACING = 9" O.C. (FROM CHART) FOR 2" EDGE DIST. SPACING = 9 X .71 = 6.3 O.C.					

TYPICAL EDGE DISTANCE IN WOOD = 3/4"
TYPICAL END DISTANCE IN WOOD = 1"
NO REDUCTION FACTOR IS REQUIRED

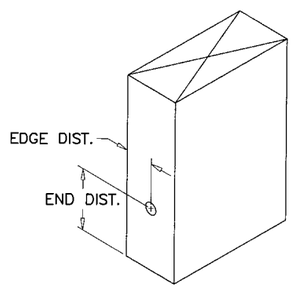

USE CHARTS 1 THRU 7 TO VERIFY ANCHOR REQUIREMENTS AND STRESS LIMITATIONS OF LOAD/SPAN COMBINATIONS FOR HEADER AND SILL.

Engr: DR. HUMAYOUN FAROOQ
STRUCTURES
FLA. PE # 16557
C.A.N. 3538
NOV 9 0 2006

AL-FAROOQ CORPORATION
ENGINEERS & PRODUCT DEVELOPMENT
1235 S.W. 87 AVE
MIAMI, FLORIDA 33174
TEL. (305) 264-8100 FAX. (305) 262-6978
PANELS/94-51RNI-NEW

EXTRUDED ALUMINUM STORM PANEL DETAILS

ROLLADEN INC.
550 ANSIN BLVD.
HALLANDALE, FL. 33009
TEL. (954) 757-8591 FAX. (954) 454-1577

revisions:

no	date	by	description
I	05.02.06	H	UPDATED FOR 2004 FBC
J	11.28.06	H	NO CHANGE THIS SHEET

date: 07-07-94
scale: 1/2" = 1"
dr. by: HAMID
chk. by:

drawing no.
94-51