MIAMI-DADE COUNTY
BUILDING CODE COMPLIANCE OFFICE (BCCO)
PRODUCT CONTROL DIVISION

MIAMI-DADE COUNTY, FLORIDA
METRO-DADE FLAGLER BUILDING
140 WEST FLAGLER STREET, SUITE 1603

MIAMI, FLORIDA 33130-1563
(305) 375-2901 FAX (305) 375-2908
www.buildingcodeonline.com

NOTICE OF ACCEPTANCE (NOA)

Firestone Metal Products, LLC.
1950 NW 18th Street
Pompano Beach, FL 33069

SCOPE:

This NOA is being issued under the applicable rules and regulations governing the use of construction materials. The documentation submitted has been reviewed by Miami-Dade County Product Control Division and accepted by the Board of Rules and Appeals (BORA) to be used in Miami Dade County and other areas where allowed by the Authority Having Jurisdiction (AHJ).

This NOA shall not be valid after the expiration date stated below. The Miami-Dade County Product Control Division (In Miami Dade County) and/or the AHJ (in areas other than Miami Dade County) reserve the right to have this product or material tested for quality assurance purposes. If this product or material fails to perform in the accepted manner, the manufacturer will incur the expense of such testing and the AHJ may immediately revoke, modify, or suspend the use of such product or material within their jurisdiction. BORA reserves the right to revoke this acceptance, if it is determined by Miami-Dade County Product Control Division that this product or material fails to meet the requirements of the applicable building code.

This product is approved as described herein, and has been designed to comply with the Florida Building Code, including the High Velocity Hurricane Zone.

DESCRIPTION: 5-V-Crimp Metal Roofing Panel System

LABELING: Each unit shall bear a permanent label with the manufacturer's name or logo, city, state and following statement: "Miami-Dade County Product Control Approved", unless otherwise noted herein.

RENEWAL of this NOA shall be considered after a renewal application has been filed and there has been no change in the applicable building code negatively affecting the performance of this product.

TERMINATION of this NOA will occur after the expiration date or if there has been a revision or change in the materials, use, and/or manufacture of the product or process. Misuse of this NOA as an endorsement of any product, for sales, advertising or any other purposes shall automatically terminate this NOA. Failure to comply with any section of this NOA shall be cause for termination and removal of NOA.

ADVERTISEMENT: The NOA number preceded by the words Miami-Dade County, Florida, and followed by the expiration date may be displayed in advertising literature. If any portion of the NOA is displayed, then it shall be done in its entirety.

INSPECTION: A copy of this entire NOA shall be provided to the user by the manufacturer or its distributors and shall be available for inspection at the job site at the request of the Building Official.

This revises NOA #05-0503.01 and consists of pages 1 through 6.
The submitted documentation was reviewed by Alex Tigera.

ROOFING SYSTEM APPROVAL

Category: Roofing
Sub-Category: Non-Structural Metal Roofing
Material: Steel
Maximum Design Pressure: **-189.25 psf**

TRADE NAMES OF PRODUCTS MANUFACTURED OR LABELED BY APPLICANT:

Product	Dimensions	Test Specifications	Product Description
5-V-Crimp Metal Roof Panels	Length: various Height: ½" Width: 22 ½" (Coverage width: 20 ½") Thickness: 0.0190" (26 ga.)	TAS 100 TAS 125 TAS 301	Corrosion resistant, galvalume or galvanized performed, coated, pre-finished, metal panels.

EVIDENCE SUBMITTED:

Test Agency	Test Identifier	Test Name/Report	Date
PRI Asphalt Technologies.	CSUC-001-02-01	Wind Driven Rain Test per TAS 100.	03/09/05
Hurricane Test Laboratories, Inc.	0227-1115-04 0227-0302-05	Uplift Resistance Test per TAS 125.	11/22/04 03/15/05
The Valspar Corporation.	N/A	Accelerated Testing of coating 2000 hrs per ASTM G23.	06/02/03
		Salt Spray Testing of coating 1000 hrs per ASTM B117.	06/02/03

APPROVED ASSEMBLIES

System:	"5-V-Crimp" Metal Panels
Deck Type:	Wood, Non-insulated
Deck Description:	$^{19}/_{32}$" or greater plywood or wood plank.
Slope Range:	2":12" or greater
Maximum Uplift Pressure:	**See fastening options below**

Deck Attachment:	In accordance with applicable building code, but in no case it shall be less than # 8 x 1¾" screws or 8d annular ring shank nails spaced at 6" o.c. In re-roofing, where deck is less than $^{19}/_{32}$" thick (minimum $^{15}/_{32}$") the above attachment method must be in addition to existing attachment.
Underlayment:	Minimum underlayment shall be an ASTM D 226 Type II installed with a minimum 4" side-lap and 6" end-laps. Underlayment shall be fastened with corrosion resistant tin-caps and 12 gauge x 1-¼" annular ring-shank nails, spaced 6" o.c. at all laps and two staggered rows 12" o.c. in the field of the roll. Or, any approved underlayment having a current NOA.
Valleys:	Valley construction shall be in compliance with Roofing Application Standard RAS 133 and with current published installation instructions and details in Firestone Metal Products' Installation Manual.
Fire Barrier Board:	Any approved fire barrier having a current NOA. Or for class A or B fire rating, install minimum ¼" thick Georgia Pacific "Dens Deck" (with current NOA) or loose lay one layer of Elk's "Versa Shield" (with current NOA) or minimum 4mm thick of Tritex, RockRoof (with current NOA) or $^{5}/_{8}$" water resistant type X gypsum sheathing with treated core and facer.
Metal Panels and Accessories:	Install the "5-V-Crimp Panels" and accessories in compliance with the current published installation instructions and details in Firestone Metal Products' Installation Manual. Flashings, penetrations, valley construction and other details shall be constructed in compliance with Roofing Application Standard RAS133.
Fastening Option #1	Panel Overlaps and Center ribs are to be installed using #9 x 1-1/2" HWH Wood screws 1" from the panel end and maximum fastener spacing of 24" on center thereafter. ***(Maximum Design Pressure, -82.25 psf. See System Limitation #2)***
Fastening Option #2	Panel Overlaps and Center ribs are to be installed using #9 x 1-1/2" HWH Wood screws 1" from the panel end and maximum fastener spacing of 12" on center thereafter. ***(Maximum Design Pressure, -189.25 psf. See System Limitation #2)***

SYSTEM LIMITATIONS

1. Fire classification is not part of this acceptance; refer to a current Approved Roofing Materials Directory for fire ratings of this product.

2. The maximum designed pressure listed herein shall be applicable to all roof pressure zones (i.e. field, perimeters, and corners). Neither rational analysis, nor extrapolation shall be permitted for enhanced fastening at enhanced pressure zones (i.e. perimeters, extended corners and corners).

3. Panels shall be roll formed in continuous lengths from eave to ridge. Maximum lengths shall be as described in Roofing Application Standard RAS 133.

4. All panels shall be permanently labeled with the manufacturer's name and/or logo, and the following statement: "Miami-Dade County Product Control Approved.

5. All products listed herein shall have a quality assurance audit in accordance with the Florida Building Code and Rule 9B-72 of the Florida Administrative Code.

PROFILE DRAWINGS

"5-V-CRIMP" METAL ROOF PANELS

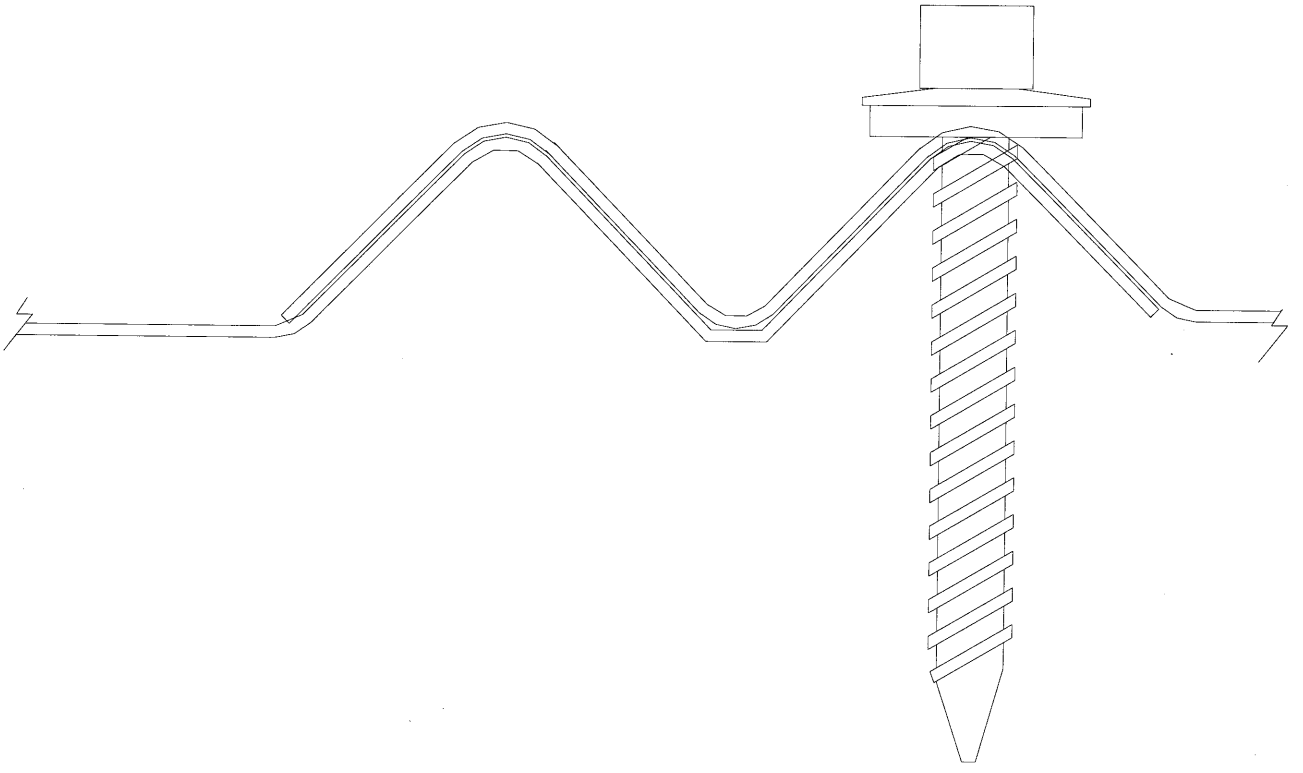

FASTENER PLACEMENT DETAIL

PROFILE DRAWINGS (CONT…)

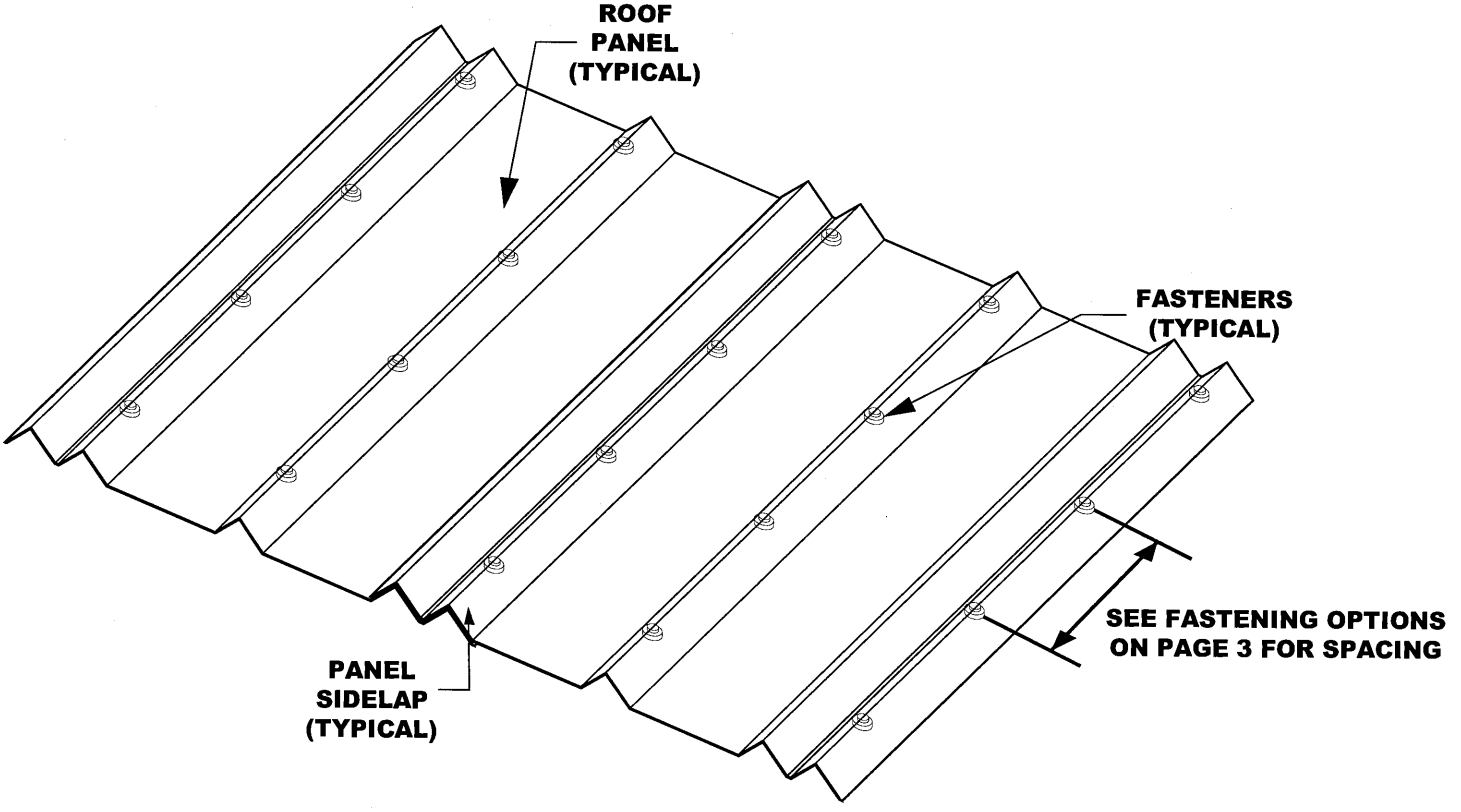

END OF THIS ACCEPTANCE