MIAMI-DADE

BUILDING CODE COMPLIANCE OFFICE (BCCO)
PRODUCT CONTROL DIVISION

MIAMI-DADE COUNTY, FLORIDA
METRO-DADE FLAGLER BUILDING
140 WEST FLAGLER STREET, SUITE 1603
MIAMI, FLORIDA 33130-1563
(305) 375-2901 FAX (305) 375-2908

NOTICE OF ACCEPTANCE (NOA)

Florida Metal Products, LLC.
1950 NW 18th Street
Pompano Beach, FL 33069

SCOPE:
This NOA is being issued under the applicable rules and regulations governing the use of construction materials. The documentation submitted has been reviewed by Miami-Dade County Product Control Division and accepted by the Board of Rules and Appeals (BORA) to be used in Miami Dade County and other areas where allowed by the Authority Having Jurisdiction (AHJ).

This NOA shall not be valid after the expiration date stated below. The Miami-Dade County Product Control Division (In Miami Dade County) and/or the AHJ (in areas other than Miami Dade County) reserve the right to have this product or material tested for quality assurance purposes. If this product or material fails to perform in the accepted manner, the manufacturer will incur the expense of such testing and the AHJ may immediately revoke, modify, or suspend the use of such product or material within their jurisdiction. BORA reserves the right to revoke this acceptance, if it is determined by Miami-Dade County Product Control Division that this product or material fails to meet the requirements of the applicable building code.

This product is approved as described herein, and has been designed to comply with the High Velocity Hurricane Zone of the Florida Building Code.

DESCRIPTION: Copper Sales UC3 Copper Panels

LABELING: Each unit shall bear a permanent label with the manufacturer's name or logo, city, state and following statement: "Miami-Dade County Product Control Approved", unless otherwise noted herein.

RENEWAL of this NOA shall be considered after a renewal application has been filed and there has been no change in the applicable building code negatively affecting the performance of this product.

TERMINATION of this NOA will occur after the expiration date or if there has been a revision or change in the materials, use, and/or manufacture of the product or process. Misuse of this NOA as an endorsement of any product, for sales, advertising or any other purposes shall automatically terminate this NOA. Failure to comply with any section of this NOA shall be cause for termination and removal of NOA.

ADVERTISEMENT: The NOA number preceded by the words Miami-Dade County, Florida, and followed by the expiration date may be displayed in advertising literature. If any portion of the NOA is displayed, then it shall be done in its entirety.

INSPECTION: A copy of this entire NOA shall be provided to the user by the manufacturer or its distributors and shall be available for inspection at the job site at the request of the Building Official.

This NOA revises NOA #05-1006.06 and consists of pages 1 through 5.
The submitted documentation was reviewed by Alex Tigera.

ROOFING SYSTEM APPROVAL:

Category:	Roofing
Sub-Category:	Metal, Panels(Non-Structural)
Material:	Copper
Deck Type:	Wood
Maximum Design Pressure	-76.75 psf

TRADE NAMES OF PRODUCTS MANUFACTURED OR LABELED BY APPLICANT:

Product	Dimensions	Test Specifications	Product Description
UC3-16	l = various maximum width = 16" min. 16 oz copper (panels are cut to appropriate length)	TAS 110	16 oz. copper, standing seam
Trim Pieces	l = varies w = varies min. 24 ga. (0.024")	TAS 110	Standard flashing and trim pieces. Manufactured for each panel width.
Panel Clips	.024" thick x 1½" wide x 1½"high x 1½" long	TAS 114 Appendix E	Corrosion resistant, formed, painted or unpainted steel clips for metal panel installation.
Panel Clips	0.024" thick x ¾" wide x 1½"high x 2" long	TAS 114 Appendix E	Corrosion resistant, formed, painted or unpainted steel clips for metal panel installation.
Expansion Panel Clips (Base)	.019" thick x 1" wide x .420" high x 5" long	TAS 114 Appendix E	Two part Stainless steel expansion clips for copper panel installation
Expansion Panel Clips (Top)	.018" thick x .412" wide x 1.870" high x 3" long		

EVIDENCE SUBMITTED:

Test Agency	Test Identifier	Test Name/Report	Date
Center For Applied Engineering	MTS 257364	TAS 100	Sep. 1995
Lilly Industries		ASTM G 23	Jan. 1994
Miami Testing Laboratory	MTL 16877 MTL 16879	ASTM E 1592 ASTM E 1592	Dec. 1996 Dec. 1996
Hurricane Test Laboratory, Inc.	0182-0102-00 0227-0116-04 0277-0613-04 0277-0509-05 0277-0608-05	UL 580	February 2000 03/31/04 06/30/04 06/17/05 07/05/05

APPROVED ASSEMBLIES

SYSTEM A-1C:	UC3 Copper 16 oz. Panel
Deck Type:	Wood, Non-insulated
Deck Description:	$^{19}/_{32}$" or greater plywood or wood plank.
Slope Range:	2":12" or greater
Maximum Uplift Pressure:	-76.75psf (See System Limitation #2)

Deck Attachment: In accordance with applicable Building Code, but in no case shall it be less than 8d annular ring shank nails spaced 6" o.c. In reroofing, where the deck is less than $^{19}/_{32}$" thick (Minimum $^{15}/_{32}$") The above attachment method must be in addition to existing attachment.

Underlayment: Minimum underlayment shall be an ASTM D 226 Type II installed with a minimum 4" side-lap and 6" end-laps. Underlayment shall be fastened with corrosion resistant tin-caps and 12 gauge 1 ¼" annular ring-shank nails, spaced 6" o.c. at all laps and two staggered rows 12" o.c. in the field of the roll. Or, any approved underlayment having a current NOA.

Valleys: Valley construction shall be in compliance with Roofing Application Standard RAS 133 and with Florida Metal Products' current published installation instructions.

Fire Barrier Board: Any approved fire barrier having a current NOA. Or for class A or B fire rating, install minimum ¼" thick Georgia Pacific "Dens Deck" (with current NOA) or loose lay one layer of Elk's "Versa Shield" (with current NOA) or minimum 4mm thick of Tritex, RockRoof (with current NOA) or $^{5}/_{8}$" water resistant type X gypsum sheathing with treated core and facer.

Metal Panels and Accessories: Install the "UC3 Copper Panels" and accessories in compliance with Florida Metal Products' current, published installation instructions and details. Flashing, penetrations, valley construction and other details shall be constructed in compliance with the minimum requirements provided in Roofing Application Standard RAS 133.

1. At the eave, rake, and ridge, fasteners shall be located not more than 4" away from the panel end.
2. Panels shall be installed with approved expansion type panel clips located 2" away from each end panel and 12" o.c. thereafter, attached to substrate with two stainless steel #10 screw of sufficient length to penetrate through the sheathing a minimum of $^{3}/_{16}$".
3. Standing seams shall be mechanically seamed to a full 180° degree seam, (double lock).

SYSTEM LIMITATIONS:

1. Fire classification is not part of this acceptance; refer to a current Approved Roofing Materials Directory for fire ratings of this product.

2. The maximum designed pressure limitation listed shall be applicable to all roof pressure zones (i.e. field, perimeters, and corners). Neither rational analysis, nor extrapolation shall be permitted for enhanced fastening at enhanced pressure zones (i.e. perimeters, extended corners and corners). The maximum fastener spacing noted in the "Systems Description" section of this approval shall not be exceeded.

3. Panels shall be roll formed in continuous lengths from eave to ridge. Maximum lengths shall be as described in Roofing Application Standard RAS 133.

4. All panels and clips shall be permanently labeled with the manufacturer's name or logo, city, state and the following statement: "Miami Dade County Product Control Approved".

5. All products listed herein shall have a quality assurance audit in accordance with the Florida Building Code and Rule 9B-72 of the Florida Administrative Code.

PROFILE DRAWINGS

UC3 COPPER PANEL SYSTEM

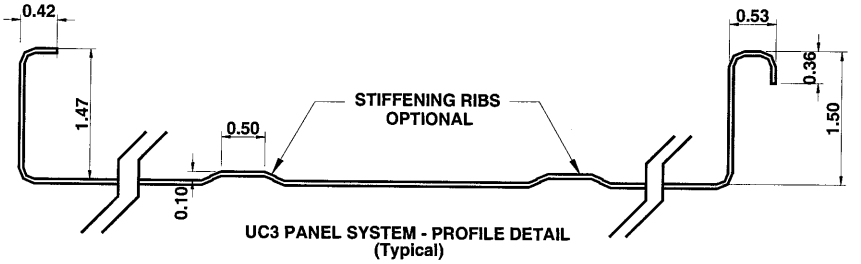

UC3 PANEL SYSTEM - PROFILE DETAIL
(Typical)

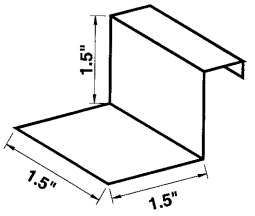

PANEL CLIP

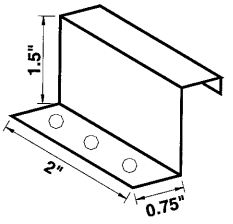

PANEL CLIP

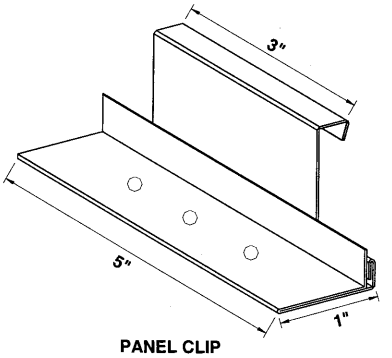

PANEL CLIP

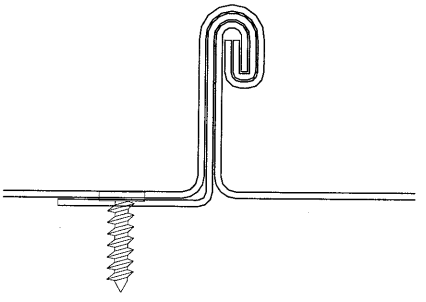

DOUBLE LOCK DETAIL
(180 DEGREES)

END OF THIS ACCEPTANCE