MIAMI-DADE

BUILDING CODE COMPLIANCE OFFICE (BCCO)
PRODUCT CONTROL DIVISION

MIAMI-DADE COUNTY, FLORIDA
METRO-DADE FLAGLER BUILDING
140 WEST FLAGLER STREET, SUITE 1603
MIAMI, FLORIDA 33130-1563
(305) 375-2901 FAX (305) 375-2908

NOTICE OF ACCEPTANCE (NOA)

Total Roofing Systems, Inc.
2100A SW Conant Avenue
Port St. Lucie, FL. 34953

SCOPE:
This NOA is being issued under the applicable rules and regulations governing the use of construction materials. The documentation submitted has been reviewed by the BCCO and accepted by the Building Code and Product Review Committee to be used in Miami Dade County and other areas where allowed by the Authority Having Jurisdiction (AHJ).

This NOA shall not be valid after the expiration date stated below. The BCCO (In Miami Dade County) and/or the AHJ (in areas other than Miami Dade County) reserve the right to have this product or material tested for quality assurance purposes. If this product or material fails to perform in the accepted manner, the manufacturer will incur the expense of such testing and the AHJ may immediately revoke, modify, or suspend the use of such product or material within their jurisdiction. BCCO reserves the right to revoke this acceptance, if it is determined by BCCO that this product or material fails to meet the requirements of the applicable building code.

This product is approved as described herein, and has been designed to comply with the Florida Building Code and the High Velocity Hurricane Zone of the Florida Building Code.

DESCRIPTION: Englert Series 2000 Metal Roof Panel over steel deck.

LABELING: Each unit shall bear a permanent label with the manufacturer's name or logo, city, state and following statement: "Miami-Dade County Product Control Approved", unless otherwise noted herein.

RENEWAL of this NOA shall be considered after a renewal application has been filed and there has been no change in the applicable building code negatively affecting the performance of this product.

TERMINATION of this NOA will occur after the expiration date or if there has been a revision or change in the materials, use, and/or manufacture of the product or process. Misuse of this NOA as an endorsement of any product, for sales, advertising or any other purposes shall automatically terminate this NOA. Failure to comply with any section of this NOA shall be cause for termination and removal of NOA.

ADVERTISEMENT: The NOA number preceded by the words Miami-Dade County, Florida, and followed by the expiration date may be displayed in advertising literature. If any portion of the NOA is displayed, then it shall be done in its entirety.

INSPECTION: A copy of this entire NOA shall be provided to the user by the manufacturer or its distributors and shall be available for inspection at the job site at the request of the Building Official.

This consists of pages 1 through 5.
The submitted documentation was reviewed by Alex Tigera.

ROOFING ASSEMBLY APPROVAL

Category:	Roofing
Sub-Category:	Non-Structural Metal Roofing
Materials:	Steel
Maximum Design Pressure	**–144.25 psf**

TRADE NAMES OF PRODUCTS MANUFACTURED OR LABELED BY APPLICANT:

Product	Dimensions	Test Specifications	Product Description
Series 2000	l = various w = 18" and 14" Thickness 0.0276 44,700 psi Grade D Class 2	TAS 110 & TAS 125	Corrosion resistant, galvanized, preformed, standing seam, coated, prefinished, metal panels.
Series 2000 Clip	min. 0.048" 3½" long x 1¾" high	TAS 114 Appendix E	Corrosion resistant, formed, steel clips for metal panel installation.
Trim Pieces	l = varies w = varies Thickness 0.0276.	TAS 110	Standard flashing and trim pieces. Manufactured for each panel width.

EVIDENCE SUBMITTED:

Test Agency	Test Identifier	Test Name/Report	Date
Underwriters Laboratories, Inc.	91NK26936	Uplift Pressure Testing UL 580-Construction No. 359, 359A	Oct. 1992
Architectural Testing, Inc.	01-32796.01	TAS 100	Sep. 1998
Architectural Testing, Inc.	01-32796.03	Tensile Test ASTM E 8-96	Oct. 1998
Architectural Testing, Inc.	ATI 99023	TAS 125-95	Dec. 1999
Architectural Testing, Inc.	01-35899.01	TAS 125-95	Feb. 2000

APPROVED ASSEMBLIES:

Deck Type A-1:	Steel, Insulated or non-insulate18" Wide Panel
Deck Description:	Metal roof deck 22 MSG grade A. coated steel. Panel continuous over two or more spans without endlaps.
Slope Range:	2":12" or greater
Maximum Uplift Pressure:	**Maximum uplift pressures for 18" wide panels is -62.5psf**
Insulation (Optional):	(Requires a bearing plate for clip attachment) Maximum 4" thick of an approved rigid board insulation with current NOA having a minimum 25psi compressive strength fastened with approved fasteners and plates. Fastening density shall be in compliance with applicable Building Code and Roofing Application Standard RAS 117.
Panel Clips:	Panels shall be installed with approved clips, attached to substrate with two corrosion resistant #10-16 screws of sufficient length to penetrate through the bottom flute of the structural deck a minimum of ½" and at a maximum spacing not to exceed 24" o.c.
Underlayment:	Minimum underlayment shall be an ASTM D 226 Type II installed with a minimum 4" side-lap and 6" end-laps. Underlayment shall be fastened with approved corrosion resistant fasteners and plates. Spaced 12" o.c. on the laps and two rows spaced 24" o.c. in the field of roll. Or any Miami-Dade County Product Control Approved self-adhered underlayment
Valleys:	Valley construction shall be in compliance with Roofing Application Standard PA 133 and with the current published installation instructions and details in Englert Metal Roofing Installation Manual.
Fire Barrier Board:	For class A or B fire rating, install minimum ¼" thick Georgia Pacific "Dens Deck" (with current NOA) or minimum 4mm thick of Tritex, RockRoof (with current NOA) or $^5/_8$" water resistant type X gypsum sheathing with treated core and facer.
Metal Panels and Accessories:	Install the "Series 2000 Panel" and accessories in compliance with the current published installation instructions and details in Englert Metal Roofing Installation Manual. Flashings, penetrations, valley construction and other details shall be constructed in compliance with Roofing Application Standard RAS 133. Maximum clip spacing shall be 24" o.c. Female leg of snap seam shall be caulked with a minimum $^1/_8$" bead of sealant prior to installation.

Deck Type A-2:	Steel, Insulated or non-insulate14" Wide Panel
Deck Description:	Metal roof deck 22 MSG grade A. coated steel. Panel continuous over two or more spans without endlaps.
Slope Range:	2":12" or greater
Maximum Uplift Pressure:	**See Table A below for maximum uplift pressures for 14" wide panels**
Insulation (Optional):	(Requires a bearing plate for clip attachment) Maximum 4" thick of an approved rigid board insulation with current NOA having a minimum 25psi compressive strength fastened with approved fasteners and plates. Fastening density shall be in compliance with applicable Building Code and Roofing Application Standard RAS 117.
Panel Clips:	Panels shall be installed with approved clips, attached to substrate with two corrosion resistant #10-16 screws of sufficient length to penetrate through the bottom flute of the structural deck a minimum of ½" and at a maximum spacing not to exceed 24" o.c.
Underlayment:	Minimum underlayment shall be an ASTM D 226 Type II installed with a minimum 4" side-lap and 6" end-laps. Underlayment shall be fastened with approved corrosion resistant fasteners and plates. Spaced 12" o.c. on the laps and two rows spaced 24" o.c. in the field of roll. Or any Miami-Dade County Product Control Approved self-adhered underlayment
Valleys:	Valley construction shall be in compliance with Roofing Application Standard PA 133 and with the current published installation instructions and details in Englert Metal Roofing Installation Manual.
Fire Barrier Board:	For class A or B fire rating, install minimum ¼" thick Georgia Pacific "Dens Deck" (with current NOA) or minimum 4mm thick of Tritex, RockRoof (with current NOA) or $^5/_8$" water resistant type X gypsum sheathing with treated core and facer.
Metal Panels and Accessories:	Install the "Series 2000 Panel" and accessories in compliance with the current published installation instructions and details in Englert Metal Roofing Installation Manual. Flashings, penetrations, valley construction and other details shall be constructed in compliance with Roofing Application Standard RAS 133. See Table A below for clip spacing. Female leg of snap seam shall be caulked with a minimum $^1/_8$" bead of sealant prior to installation.

TABLE A
MAXIMUM DESIGN PRESSURES

Roof Areas	**Field**	**Perimeter and Corner[1]**
Maximum Design Pressures	-62.5psf	-144.25psf
Maximum Clip Spacing	24" o.c.	8" o.c.

1. Extrapolation shall not be allowed

SYSTEM LIMITATIONS:

1. The maximum designed pressure listed herein shall be applicable to all roof pressure zones (i.e. field, perimeters, and corners). Neither rational analysis, nor extrapolation shall be permitted for enhanced fastening at enhanced pressure zones (i.e. perimeters, extended corners and corners).

2. Panels shall be roll formed in continuous lengths from eave to ridge. Maximum lengths shall be as described in Miami-Dade County Roofing Application Protocol RAS 133.

3. All panels shall be permanently labeled with the manufacturer's name and/or logo, and the following statement: "Miami-Dade County Product Control Approved. All clips shall be permanently labeled Englert, and/or logo, and/or model.

4. All products listed herein shall have a quality assurance audit in accordance with the Florida Building Code and Rule 9B-72 of the Florida Administrative Code.

5. Panels may be jobsite roll formed with machine model #6421298 from Englert Inc.

PROFILE DRAWING
SERIES 2000

ENGLERT, INC.
1200 AMBOY AVE.
PERTH AMBOY, NEW JERSEY 08862

SERIES 2000
"PANEL AND ATTACHMENT CLIP"

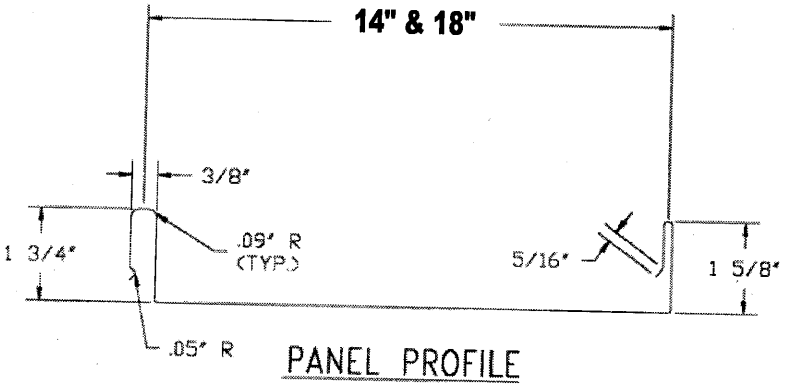

PANEL PROFILE

NOTES:
1. ALL DIMENSIONS ARE TO CENTER LINE OF MATERIAL.
2. ALL RADII ARE 0.09" UNO
3. PANEL TO BE MINIMUM 24 GA. STEEL
4. CLIPS TO BE MINIMUM 18 GA. STEEL

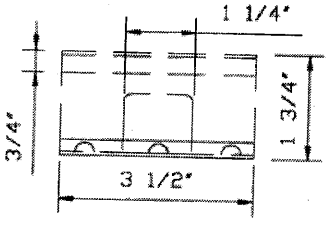

CLIP SIDE VIEW

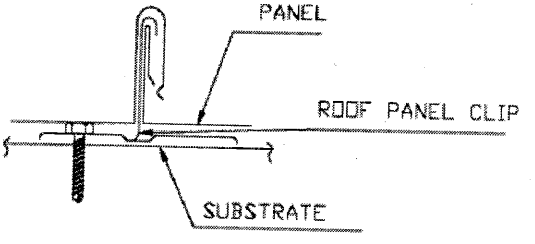

PANEL ENGAGEMENT

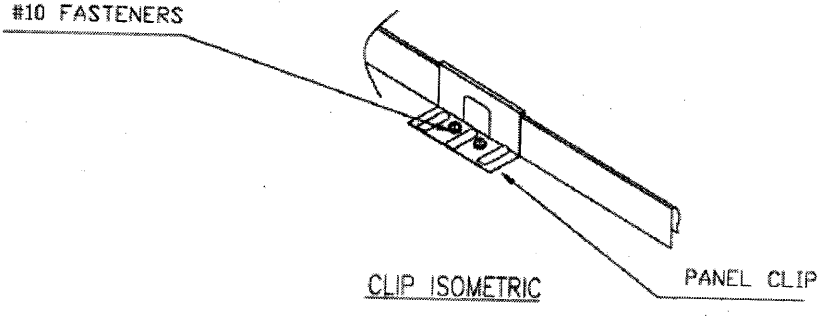

CLIP ISOMETRIC

END OF THIS ACCEPTANCE