MIAMI-DADE COUNTY, FLORIDA
METRO-DADE FLAGLER BUILDING

BUILDING CODE COMPLIANCE OFFICE (BCCO)
PRODUCT CONTROL DIVISION

140 WEST FLAGLER STREET, SUITE 1603
MIAMI, FLORIDA 33130-1563
(305) 375-2901 FAX (305) 375-2908
www.buildingcodeonline.com

# NOTICE OF ACCEPTANCE (NOA)

**Dectile – Harkus Construction, Inc.**
**195 Kreiss Road**
**Butler, PA. 16001**

**SCOPE:**
This NOA is being issued under the applicable rules and regulations governing the use of construction materials. The documentation submitted has been reviewed by Miami-Dade County Product Control Division and accepted by the Board of Rules and Appeals (BORA) to be used in Miami Dade County and other areas where allowed by the Authority Having Jurisdiction (AHJ).

This NOA shall not be valid after the expiration date stated below. The Miami-Dade County Product Control Division (In Miami Dade County) and/or the AHJ (in areas other than Miami Dade County) reserve the right to have this product or material tested for quality assurance purposes. If this product or material fails to perform in the accepted manner, the manufacturer will incur the expense of such testing and the AHJ may immediately revoke, modify, or suspend the use of such product or material within their jurisdiction. BORA reserves the right to revoke this acceptance, if it is determined by Miami-Dade County Product Control Division that this product or material fails to meet the requirements of the applicable building code.

This product is approved as described herein, and has been designed to comply with the Florida Building Code, including the High Velocity Hurricane Zone of the Florida Building Code.

**DESCRIPTION: Dectile Double Roman Concrete Tile**

**LABELING:** Each unit shall bear a permanent label with the manufacturer's name or logo, city, state and following statement: "Miami-Dade County Product Control Approved", unless otherwise noted herein.

**RENEWAL** of this NOA shall be considered after a renewal application has been filed and there has been no change in the applicable building code negatively affecting the performance of this product.

**TERMINATION** of this NOA will occur after the expiration date or if there has been a revision or change in the materials, use, and/or manufacture of the product or process. Misuse of this NOA as an endorsement of any product, for sales, advertising or any other purposes shall automatically terminate this NOA. Failure to comply with any section of this NOA shall be cause for termination and removal of NOA.

**ADVERTISEMENT:** The NOA number preceded by the words Miami-Dade County, Florida, and followed by the expiration date may be displayed in advertising literature. If any portion of the NOA is displayed, then it shall be done in its entirety.

**INSPECTION:** A copy of this entire NOA shall be provided to the user by the manufacturer or its distributors and shall be available for inspection at the job site at the request of the Building Official.

This new NOA consists of pages 1 through 4.
The submitted documentation was reviewed by Alex Tigera.

## ROOFING ASSEMBLY APPROVAL

**Category:** Roofing
**Sub Category:** Roofing Tiles
**Material:** Concrete

## 1. SCOPE

This new roofing system using Dectile's Double Roman Concrete Tile, as manufactured Dectile – Harkus Construction, Inc. in Butler, PA. described in Section 2 of this Notice of Acceptance, designed to comply with the Florida Building Code, 2004 Edition for the High Velocity Hurricane Zone. For the locations where the pressure requirements, as determined by applicable Building Code, does not exceed the design pressure values obtain by calculations in compliance with RAS 127 using the values listed in section 4 herein. The attachment calculations shall be done as a moment based system.

## 2. PRODUCT DESCRIPTION

| Manufactured by Applicant | Dimensions | Test Specifications | Product Description |
|---|---|---|---|
| Dectile Double Roman Concrete Tile | l = 16-½"<br>w = 13"<br>min. .63" thick | TAS 112 | Double Roll profile, interlocking, one-piece, concrete roof tile equipped with two nail holes. For adhesive set applications. |
| Trim Pieces | l = varies<br>w = varies<br>varying thickness | TAS 112 | Accessory trim, concrete roof pieces for use at hips, rakes, ridges and valley terminations. Manufactured for each tile profile. |

## 2.1 SUBMITTED EVIDENCE

| Test Agency | Test Identifier | Test Name/Report | Date |
|---|---|---|---|
| IBA Consultants, Inc. | 4018-2 | TAS-112 | 02/11/06 |
| IBA Consultants, Inc. | 4034-4 | TAS-101 | 05/13/06 |

## 3. LIMITATIONS

3.1 Fire classification is not part of this acceptance.

3.2 For mortar or adhesive set tile applications, a static field uplift test shall be performed in accordance with RAS 106.

3.3 Applicant shall retain the services of a Miami-Dade County Certified Laboratory to perform quarterly test in accordance with TAS 112, appendix 'A'. Such testing shall be submitted to the Building Code Compliance Office for review.

3.4 Minimum underlayments shall be in compliance with the applicable Roofing Applications Standards listed section 4.1 herein.

3.5 30/90 hot mopped underlayment applications may be installed perpendicular to the roof slope unless stated otherwise by the underlayment material manufacturers published literature.

3.6 This acceptance is for wood deck applications. Minimum deck requirements shall be in compliance with applicable Building Code.

## 4. INSTALLATION

4.1 Dectile – Double Roman Concrete Roof Tile and its components shall be installed in strict compliance with Miami Dade County Roofing Application Standard RAS 118, RAS 119, and RAS 120.

4.2 Data For Attachment Calculations

| Table 1: Average Weight (W) and Dimensions (l x w) | | | |
|---|---|---|---|
| **Tile Profile** | **Weight-W (lbf)** | **Length-l (ft.)** | **Width-w (ft.)** |
| Dectile – Double Roman Concrete Roof Tile | 10.1 | 1.375 | 1.08 |

| Table 2: Aerodynamic Multipliers - $\lambda$ ($ft^3$) | |
|---|---|
| **Tile Profile** | **$\lambda$ ($ft^3$) Direct Deck Application** |
| Dectile – Double Roman Concrete Roof Tile | 0.29 |

| Table 3: Restoring Moments due to Gravity - $M_g$ (ft-lbf) | | | | | | |
|---|---|---|---|---|---|---|
| **Tile Profile** | **2":12"** | **3":12"** | **4":12"** | **5":12"** | **6":12"** | **7":12" or greater** |
| Dectile – Double Roman Concrete Roof Tile | Direct Deck | Direct Deck | Direct Deck | Direct Deck | Direct Deck | Direct Deck |
| | 6.985 | 6.901 | 6.764 | 6.572 | 6.307 | 5.970 |

| Table 4: Attachment Resistance Expressed as a Moment $M_f$ (ft-lbf) for Single Patty Adhesive Set System | | |
|---|---|---|
| **Tile Profile** | **Tile Application** | **Minimum Attachment Resistance** |
| Dectile – Double Roman Concrete Roof Tile | Adhesive | 66.25[2] |
| 1 See manufactures component approval for installation requirements. | | |
| 2 Polyfoam Product, Inc. Average weight of patty 47.7grams. | | |

## 5. LABELING

All tiles shall bear the imprint or identifiable marking of the manufacturer's name or logo (see Detail Below), or following statement: "Miami-Dade County Product Control Approved".

DECTILE

**DECTILE DOUBLE ROMAN CONCRETE ROOF TILE LABEL (LOCATED ON UNDERSIDE OF TILE)**

## 6. BUILDING PERMIT REQUIREMENTS

**6.1** Application for building permit shall be accompanied by copies of the following:

**6.1.1** This Notice of Acceptance.

**6.1.2** Any other documents required by the Building Official or applicable Building Code in order to properly evaluate the installation of this system.

## PROFILE DRAWING

**Style 100 Double Roman Roof Tile**
**Double Roman 100**

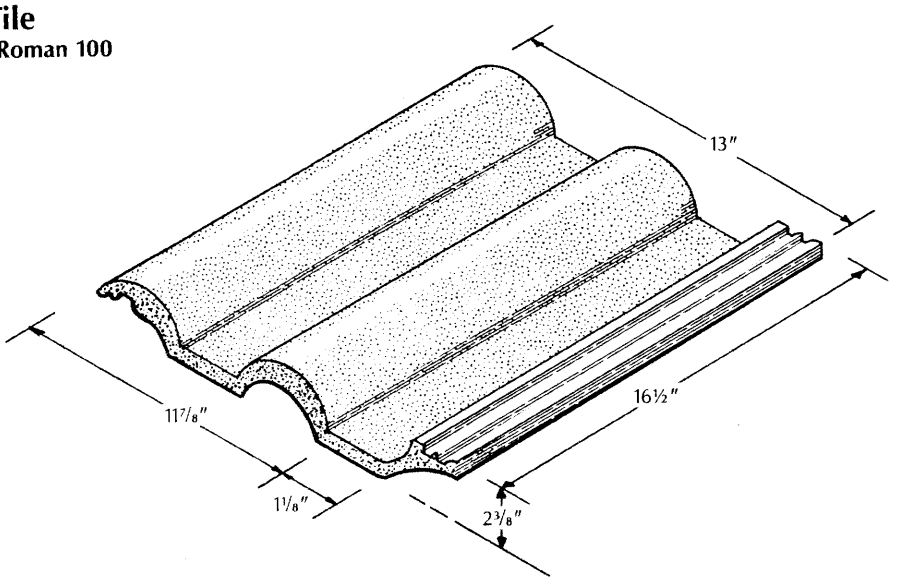


**DECTILE DOUBLE ROMAN CONCRETE ROOF TILE (N.T.S.)**

## END OF THIS ACCEPTANCE