MIAMI-DADE COUNTY
BUILDING CODE COMPLIANCE OFFICE (BCCO)
PRODUCT CONTROL DIVISION

MIAMI-DADE COUNTY, FLORIDA
METRO-DADE FLAGLER BUILDING

140 WEST FLAGLER STREET, SUITE 1603
MIAMI, FLORIDA 33130-1563
(305) 375-2901 FAX (305) 375-2908
www.buildingcodeonline.com

NOTICE OF ACCEPTANCE (NOA)

Tropic Hurricane Shutters, Inc.
3804 N. W. 125th Street
OPA LOCKA, Florida 33054

SCOPE:
This NOA is being issued under the applicable rules and regulations governing the use of construction materials. The documentation submitted has been reviewed by Miami-Dade County Product Control Division and accepted by the Board of Rules and Appeals (BORA) to be used in Miami Dade County and other areas where allowed by the Authority Having Jurisdiction (AHJ).

This NOA shall not be valid after the expiration date stated below. The Miami-Dade County Product Control Division (In Miami Dade County) and/or the AHJ (in areas other than Miami Dade County) reserve the right to have this product or material tested for quality assurance purposes. If this product or material fails to perform in the accepted manner, the manufacturer will incur the expense of such testing and the AHJ may immediately revoke, modify, or suspend the use of such product or material within their jurisdiction. BORA reserves the right to revoke this acceptance, if it is determined by Miami-Dade County Product Control Division that this product or material fails to meet the requirements of the applicable building code.

This product is approved as described herein, and has been designed to comply with the High Velocity Hurricane Zone of the Florida Building Code.

DESCRIPTION: "CENTERFOLD" Aluminum Accordion Shutter

APPROVAL DOCUMENT: Drawing No. 06-432, titled "Centerfold Accordion Shutter", sheets 1 through 10 of 10, prepared by Thornton-Tomasetti Group, dated September 12, 2002, last revision #3 dated August 10, 2005, signed and sealed by John W. Knezevich, P.E., bearing the Miami-Dade County Product Control Approval stamp with the Notice of Acceptance number and Approval date by the Miami-Dade County Product Control Division.

MISSILE IMPACT RATING: Large and Small Missile Impact

LABELING: Each unit shall bear a permanent label with the manufacturer's name or logo, city, state and the following statement: "Miami-Dade County Product Control Approved", unless otherwise noted herein.

RENEWAL of this NOA shall be considered after a renewal application has been filed and there has been no change in the applicable building code negatively affecting the performance of this product.

TERMINATION of this NOA will occur after the expiration date or if there has been a revision or change in the materials, use, and/or manufacture of the product or process. Misuse of this NOA as an endorsement of any product, for sales, advertising or any other purposes shall automatically terminate this NOA. Failure to comply with any section of this NOA shall be cause for termination and removal of NOA.

ADVERTISEMENT: The NOA number preceded by the words Miami-Dade County, Florida, and followed by the expiration date may be displayed in advertising literature. If any portion of the NOA is displayed, then it shall be done in its entirety.

INSPECTION: A copy of this entire NOA shall be provided to the user by the manufacturer or its distributors and shall be available for inspection at the job site at the request of the Building Official.

This NOA consists of this page 1, evidence submitted page E-1 as well as approval document mentioned above. The submitted documentation was reviewed by **Helmy A. Makar, M.S., P.E.**

Helmy A. Makar
10/16/2006

NOA No 06-0920.15
Expiration Date: 10/16/2011
Approval Date: 10/16/2006

Tropic Hurricane Shutters, Inc.

NOTICE OF ACCEPTANCE: EVIDENCE SUBMITTED

A. DRAWINGS

1. *Drawing No. 06-432, titled "Centerfold Accordion Shutter", sheets 1 through 10 of 10, prepared by Thornton-Tomasetti Group, dated September 12, 2002, last revision #3 dated August 10, 2005, signed and sealed by John W. Knezevich, P.E.*

B. TESTS

1. *See Association's generic approval under 06-0056.*

C. CALCULATIONS

1. *See Association's generic approval under 06-0056.*

D. QUALITY ASSURANCE

1. *By Miami-Dade County Building Code Compliance Office.*

E. MATERIAL CERTIFICATIONS

1. *See Association's generic approval under 06-0056.*

F. STATEMENTS

1. *Release letter issued by Centerfold Shutter Group, Inc., dated June 08, 2006, certifying this product to meet the criteria of product tested and approved, and allowing Tropic Hurricane Shutters, Inc. to use the test results approved under Miami-Dade County Approval No. 06-0056, signed by Antonio J. Requejo.*
2. *Acknowledgment letter by Tropic Hurricane Shutters, Inc., dated July 03, 2006, signed by Armando Palenzuela.*
3. *Letter issued by Thornton-Tomasetti Group, dated June 28, 2006, certifying that the drawing (No. 06-432) prepared for Tropic Hurricane Shutters, Inc., signed and sealed by V. John Knezevich, P.E., is engineering wise identical to Centerfold Shutter Group, Inc. generic drawing (No. 05-484).*
4. *Acceptance Letter issued to Mr. Armando Palenzuela on October 14, 2006 and returned signed by Mr. Armando Palenzuela on October 16, 2006, indicating to please issue the proposed Notice of Acceptance as submitted and reviewed.*

Helmy A. Makar, M.S., P.E.
Product Control Examiner
NOA No 06-0920.15
Expiration Date: 10/16/2011
Approval Date: 10/16/2006

Print Information: P:\FL1\KA\CADD\Associations\Centerfold\TropicHS\06-432\R3-sub\06-432-01.dwg MCantu 06/28/2006 03:47:56pm 06/28/06 15:45

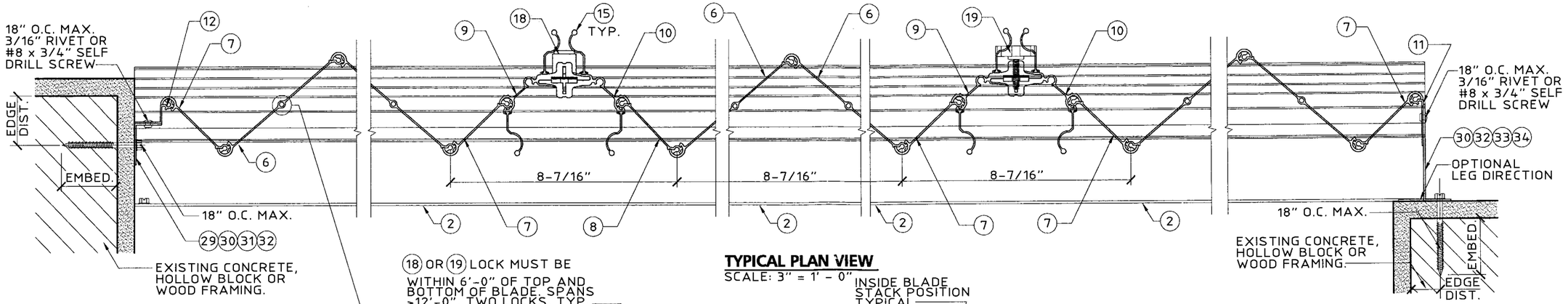

18 OR 19 LOCK MUST BE WITHIN 6'-0" OF TOP AND BOTTOM OF BLADE. SPANS >12'-0", TWO LOCKS. TYP.

NOTE:
CENTER PINS INSTALLED TOP & BOTTOM IN HOLLOW OF THE BLADE AT EVERY OTHER BLADE ONLY.

TYPICAL PLAN VIEW
SCALE: 3" = 1' - 0"

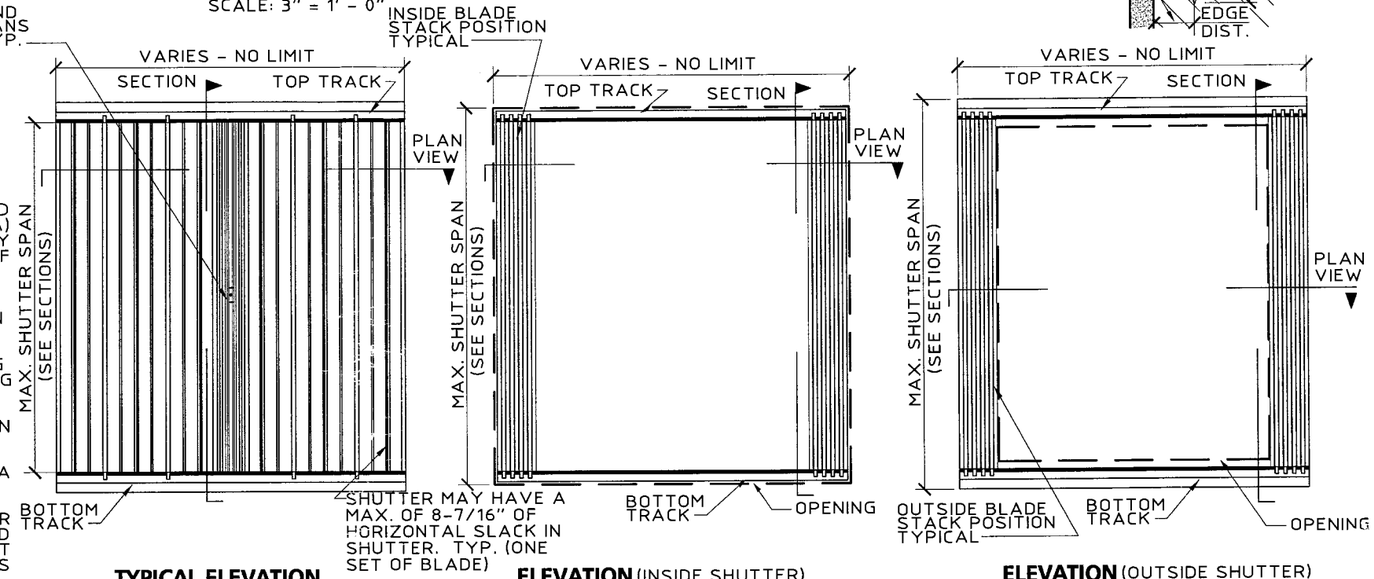

TYPICAL ELEVATION
N.T.S.

ELEVATION (INSIDE SHUTTER)
N.T.S.

ELEVATION (OUTSIDE SHUTTER)
N.T.S.

GENERAL NOTES:

1. THESE APPROVAL DOCUMENTS REPRESENT A SHUTTER SYSTEM ANALYZED WITH THE PROVISIONS SET FOR THE ISSUANCE OF A NOTICE OF ACCEPTANCE (NOA) BY MIAMI-DADE COUNTY PRODUCT CONTROL DIVISION FOR THE HIGH VELOCITY HURRICANE ZONE (HVHZ) AND NON-HIGH VELOCITY HURRICANE ZONE SECTIONS OF THE FLORIDA BUILDING CODE, 2004 EDITION.
2. A 33% INCREASE IN ALLOWABLE LOADS HAS NOT BEEN USED IN THE DESIGN OF THE ANCHOR SPACINGS EXCEPT FOR ANCHORS TO WOOD, A WIND LOAD DURATION FACTOR OF 1.33 HAS BEEN USED TO CALCULATE THE ANCHOR SPACINGS.
3. DETERMINE THE POSITIVE AND NEGATIVE DESIGN LOADS TO USE WHEN REFERENCING THESE DOCUMENTS IN ACCORDANCE WITH THE GOVERNING CODE AND GOVERNING WIND VELOCITY.
4. THESE APPROVAL DOCUMENTS ARE GENERIC AND DO NOT INCLUDE INFORMATION FOR SITE-SPECIFIC APPLICATION OF THIS SHUTTER SYSTEM.
5. THESE APPROVAL DOCUMENTS COMPLY WITH CHAPTER 61G15-23 OF THE FLORIDA ADMINISTRATIVE CODE.
6. THESE APPROVAL DOCUMENTS ARE SUITABLE TO BE APPLIED BY THE CONTRACTOR PROVIDED THE CONTRACTOR DOES NOT DEVIATE FROM THE CONDITIONS DETAILED HEREIN AND THE CONTRACTOR VERIFIES THAT THE EXISTING STRUCTURE DOES NOT DEVIATE IN EITHER FORM OR MATERIAL FROM THE STRUCTURAL SUBSTRATES DETAILED HEREIN.
7. ANY MODIFICATIONS OR ADDITIONS TO THESE APPROVAL DOCUMENTS WILL VOID THE APPROVAL DOCUMENTS.
8. WHEN THE SITE CONDITIONS DEVIATE FROM THESE APPROVAL DOCUMENTS, THE BUILDING OFFICIAL MAY ELECT ONE OF THE FOLLOWING OPTIONS:
   A) REQUIRE THAT SITE SPECIFIC DOCUMENTS BE PREPARED, SIGNED, DATED AND SEALED BY A LICENSED ENGINEER OR REGISTERED ARCHITECT, WHICH DETAIL AND JUSTIFY THE DEVIATION. SAID DOCUMENTS SHALL BE SUBMITTED TO THE PRODUCT ENGINEER FOR REVIEW AS A CONDITION TO THE BUILDING OFFICIAL GRANTING HIS/HER APPROVAL.
   B) REQUIRE THAT A ONE-TIME SITE SPECIFIC APPROVAL BE APPLIED FOR AND SECURED FROM THE MIAMI-DADE COUNTY PRODUCT CONTROL DIVISION

   WHEN THE SITE CONDITION DEVIATIONS OCCUR WITHIN THE HIGH VELOCITY HURRICANE ZONE AREAS ONLY OPTION "B" SHALL BE ACCEPTED BY THE BUILDING OFFICIAL.
9. EACH SHUTTER ASSEMBLY SHALL BE PERMANENTLY LABELED AS FOLLOWS:
   TROPIC HURRICANE SHUTTERS INC.
   OPA-LOCKA, FLORIDA
   MIAMI-DADE COUNTY PRODUCT APPROVED
10. LOCKING MECHANISM 18 OR 19 LOCK MUST BE WITHIN 6'-0" OF TOP AND BOTTOM OF BLADE. FOR SHUTTER SPAN GREATER THAN 12'-0", TWO LOCKING MECHANISM 18 OR 19 SHALL BE REQUIRED. SIDE CLOSURE LOCKING MECHANISM SHALL BE LOCKED TO PROVIDE HURRICANE PROTECTION.
11. STORM SHUTTER EXTRUSIONS SHOWN SHALL BE 6063-T6 ALUMINUM ALLOY, U.O.N.
12. ALL SCREWS AND BOLTS TO BE 2024-T4 ALUMINUM ALLOY, STAINLESS STEEL, FLUOROCARBON COATED OR GALVANIZED STEEL WITH A MINIMUM TENSILE STRENGTH OF 33 K.S.I., U.O.N. RIVETS TO BE 3/16"Ø, 5052 ALUM. ALLOY, U.O.N.
13. TOP AND BOTTOM DETAILS MAY BE INTERCHANGED AS FIELD CONDITIONS REQUIRE.
14. TRACKS MAY BE REMOVABLE AT NON-STACKING LOCATIONS. USE REMOVABLE ANCHORS SUCH AS FEMALE PANEL MATES OR ALL POINTS SOLID-SET ANCHORS.

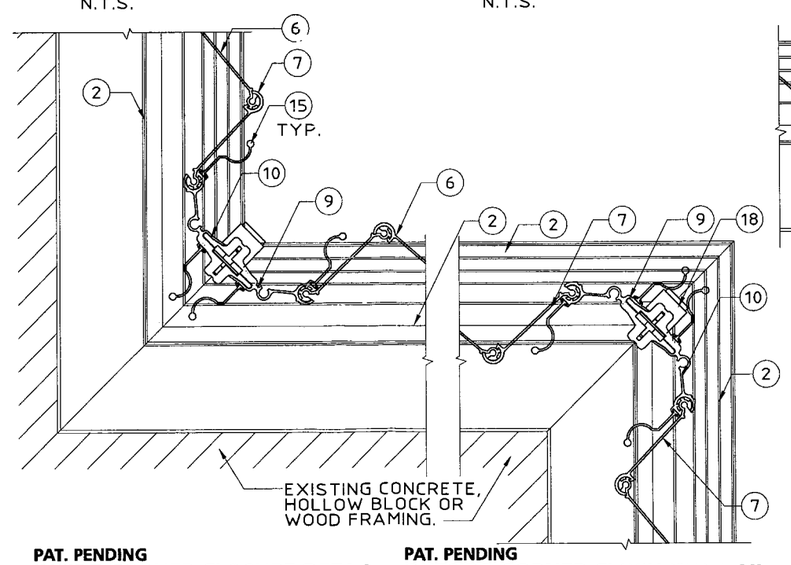

PAT. PENDING
INSIDE CORNER CLOSURE DETAIL
SCALE: 3" = 1' - 0"

PAT. PENDING
OUTSIDE CORNER CLOSURE DETAIL
SCALE: 3" = 1' - 0"

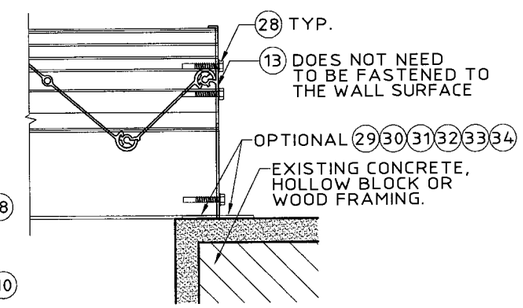

PAT. PENDING
TYPICAL SIDE CLOSURE DETAIL
SCALE: 3" = 1' - 0"

Approved as complying with the Florida Building Code
Date 10/16/2006
NOA# 06-0920.15
Miami Dade Product Control Division
By

Thornton-Tomasetti Group
330 N. Andrews Ave., Suite 450 • Ft. Lauderdale, FL 33301
Tel. (954) 522-3690 • Fax (954) 522-3691 • COA # 7519
Website: www.TheTTGroup.com

Copyright © 2006 Thornton-Tomasetti Group, Inc.
CENTERFOLD LICENSED BY CENTERFOLD SHUTTER GROUP, INC.

CENTERFOLD ACCORDION SHUTTER

Tropic Hurricane Shutters Inc.
3804 N.W. 125TH STREET
OPA-LOCKA, FL 33054
TEL: (305) 681-3661
FAX: (305) 681-3663

John W. Knezevich
Professional Engineer
FL License No.: PE 0041961

JUN 28 2006

revisions

no	date	by	description
1	04/08/04	VJK	COUNTY COMMENTS
2	06/10/04	ZMS	COUNTY COMMENTS
3	08/10/05	JWK	2004 CODE

CSG I.D. #06062805484D

date 09/12/2002	
scale AS NOTED	drawn by MCR
design by JWK	checked by VJK

drawing no. 06-432

sheet 1 of 10

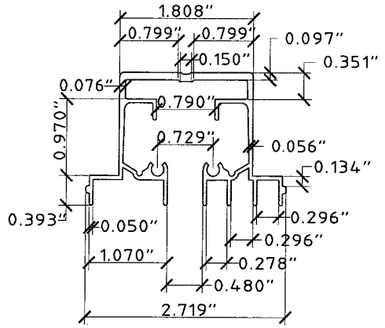

1 **HEADER / SILL**
SCALE: HALF SIZE

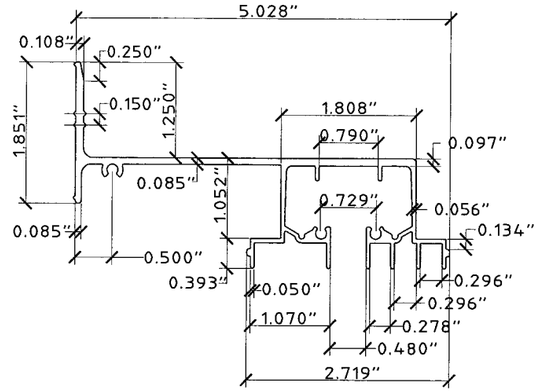

2 **WALL HEADER / SILL**
SCALE: HALF SIZE

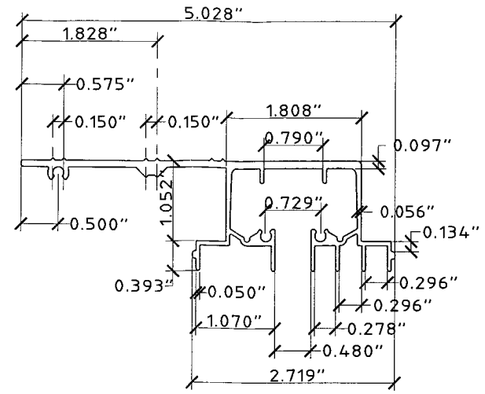

3 **INSIDE HEADER / SILL**
SCALE: HALF SIZE

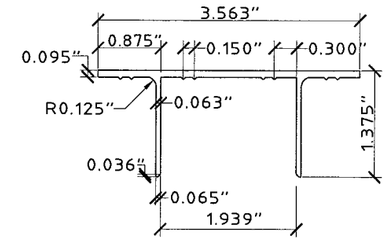

4 **ADJUSTABLE HEADER / SILL**
SCALE: HALF SIZE

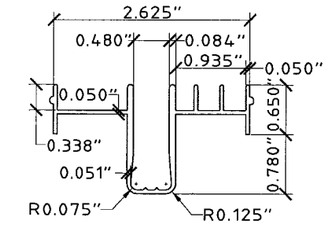

5 **RECESSED SILL**
SCALE: HALF SIZE

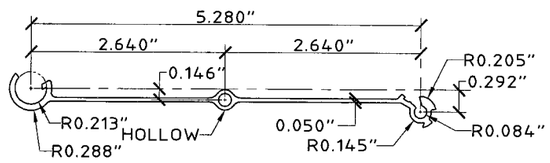

PAT. PENDING
6 **FULL BLADE M / F**
SCALE: HALF SIZE

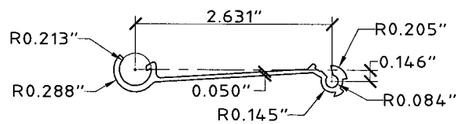

7 **HALF BLADE M / F**
SCALE: HALF SIZE

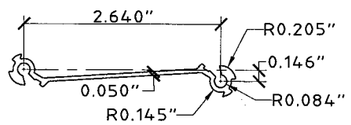

8 **HALF BLADE M / M**
SCALE: HALF SIZE

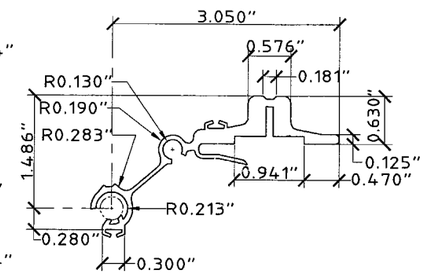

PAT. PENDING
9 **CENTERMATE 1**
SCALE: HALF SIZE

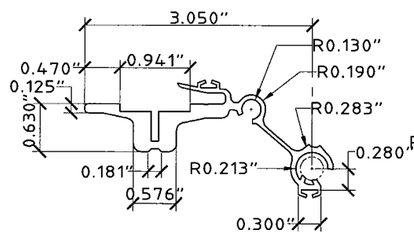

PAT. PENDING
10 **CENTERMATE 2**
SCALE: HALF SIZE

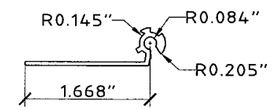

11 **180° STARTER**
SCALE: HALF SIZE

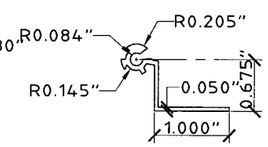

12 **90° STARTER**
SCALE: HALF SIZE

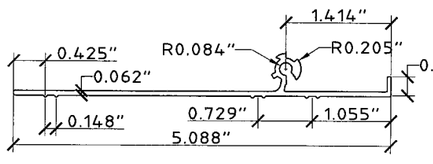

PAT. PENDING
13 **CLOSURE STARTER**
SCALE: HALF SIZE

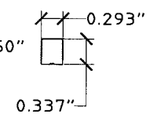

14 **OPTIONAL STOPPER**
SCALE: HALF SIZE

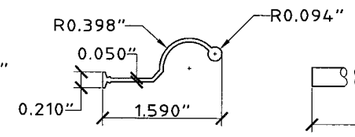

3" MIN. LENGTH

15 **HANDLE**
SCALE: HALF SIZE

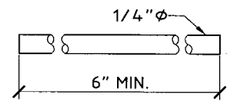

PLASTIC OR ALUMINUM

16 **OPTIONAL 1/4"Ø LOCKING ROD**
SCALE: HALF SIZE

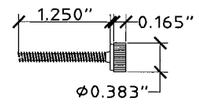

17 **# 6 THUMB SCREW**
SCALE: HALF SIZE

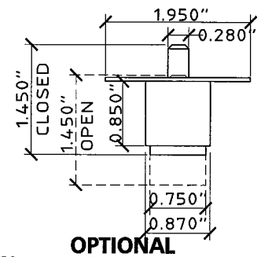

18 **OPTIONAL KEY LOCK**
SCALE: HALF SIZE

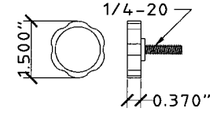

19 **KNOB LOCK SCREW**
SCALE: HALF SIZE

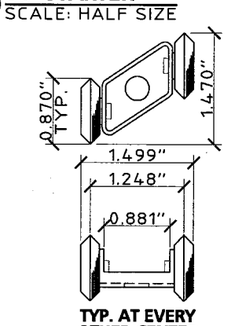

TYP. AT EVERY OTHER CENTER JOINT AT TOP

20 **WHEEL ASSEMBLY**
SCALE: HALF SIZE

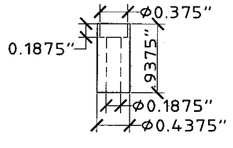

21 **LONG BUSHING**
SCALE: HALF SIZE

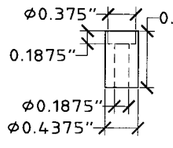

22 **SHORT BUSHING**
SCALE: HALF SIZE

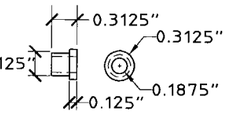

23 **HAT BUSHING**
SCALE: HALF SIZE

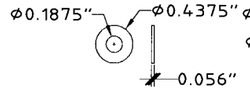

24 **MS-842 WASHER**
SCALE: HALF SIZE

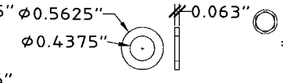

25 **C516 WASHER**
SCALE: HALF SIZE

#10 SCREW WITH #8 SCREW HEAD 410 HT SS (W/ FLUOROCARBON COATING)

26 **2" #10 SCREW**
SCALE: HALF SIZE

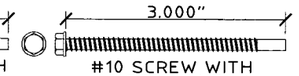

#10 SCREW WITH #8 SCREW HEAD 410 HT SS (W/ FLUOROCARBON COATING)

NOTE: ONLY USED AT CENTERMATE

27 **3" #10 SCREW**
SCALE: HALF SIZE

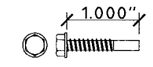

#8 SCREW HEAD 410 HT SS (W/ FLUOROCARBON COATING)

28 **1" #8 SCREW**
SCALE: HALF SIZE

10/16/2006
06-0920.15
Helmy A. Mele

Print Information: P:\FL1\KA\CADD\Associations\Centerfold\TropicHSI\06-432\R3-sub\06-432-02.dwg MCantu 06/28/2006 03:48:01pm 06/28/06 15:45

Thornton-Tomasetti Group
330 N. Andrews Ave. Suite 450 • Ft. Lauderdale, FL 33301
Tel. (954) 522-3690 • Fax (954) 522-3691 • COA # 7519
Website: www.TheTTGroup.com

Copyright © 2006 Thornton-Tomasetti Group, Inc.
CENTERFOLD LICENSED BY CENTERFOLD SHUTTER GROUP, INC.

CENTERFOLD ACCORDION SHUTTER

Tropic Hurricane Shutters Inc.
3804 N.W. 125TH STREET
OPA-LOCKA, FL 33054
TEL: (305) 681-3661
FAX: (305) 681-3663

John W. Knezevich
Professional Engineer
FL License No.: PE 0041961

JUN 28 2006

revisions

no	date	by	description
1	06/08/04	VJK	COUNTY COMMENTS
2	06/10/04	ZHS	COUNTY COMMENTS
3	08/10/05	JWK	2004 CODE

CSG I.D. #060628054 84D

date	09/12/2002
scale	AS NOTED
drawn by	MCR
design by	JWK
checked by	VJK
drawing no.	06-432

sheet 2 of 10

TABLE 1 — ALUM. ANGLE SCHEDULE

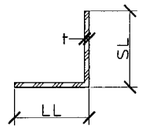

COMP. No.	SHORT LEG (SL)	LONG LEG (LL)	THICKNESS (t)
29	1"	1"	1/16"
30	1"	3"	1/16"
31	2"	2"	1/8"
32	2"	3"	1/8"
33	2"	4"	1/8"
34	2"	5"	1/8"
35	2-1/2"	7"	3/16"
36	3"	5"	1/8"

TABLE 2 — ALUM. BUILD OUT TUBE SCHEDULE

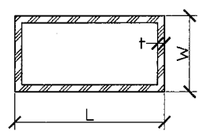

COMP. No.	WIDTH (W)	LENGTH (L)	THICKNESS (t)
37	1"	2"	.093"
38	2"	2"	.093"
39	3"	2"	1/8"
40	3"	5"	1/8"

TABLE 3 — ALUM. CARRY BEAM SCHEDULE

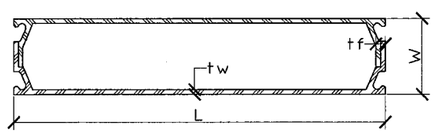

COMP. No.	WIDTH (W)	LENGTH (L)	THICKNESS (tw)	THICKNESS (tf)
41	2"	6	.055"	.130"
42	2"	8	.072"	.224"
43	2"	10	.092"	.360"

TABLE 4 — MINIMUM SHUTTER SEPARATION FROM GLASS

POSITIVE DESIGN LOAD (W) (P.S.F.)	ACTUAL SHUTTER SPAN (L) (FT - IN)	MIN. SEPRATION FROM GLASS FOR INSTALLATION LESS THAN OR EQUAL TO 30' ABOVE GRADE	MIN. SEPRATION FROM GLASS FOR INSTALLATIONS GREATER THAN 30' ABOVE GRADE
33.8	4' - 0"	1-5/8"	1"
	6' - 0"	1-5/8"	1"
	8' - 6"	1-5/8"	1-1/4"
	12' - 0"	2-1/8"	2"
	14' - 3"	3"	3"
40.0	4' - 0"	1-5/8"	1"
	6' - 0"	1-5/8"	1-1/8"
	8' - 6"	1-5/8"	1-1/4"
	12' - 0"	2-1/8"	2-1/8"
	13' - 8"	3"	3"
50.0	4' - 0"	1-5/8"	1"
	6' - 0"	1-5/8"	1-1/8"
	8' - 6"	1-5/8"	1-3/8"
	12' - 0"	2-1/2"	2-1/2"
	12' - 11"	3"	3"
60.0	4' - 0"	1-5/8"	1"
	6' - 0"	1-5/8"	1-1/8"
	8' - 6"	1-5/8"	1-1/2"
	11' - 0"	2-1/4"	2-1/4"
	12' - 4"	3"	3"
80.0	4' - 0"	1-5/8"	1"
	6' - 0"	1-5/8"	1-1/8"
	8' - 6"	1-5/8"	1-5/8"
	10' - 0"	2-1/8"	2-1/8"
	11' - 5"	2-7/8"	2-7/8"
90.0	4' - 0"	1-5/8"	1"
	6' - 0"	1-5/8"	1-1/8"
	8' - 6"	1-5/8"	1-5/8"
	10' - 0"	2-1/4"	2-1/4"
	10' - 2"	2-3/8"	2-3/8"
100.0	4' - 0"	1-5/8"	1"
	6' - 0"	1-5/8"	1-1/8"
	8' - 6"	1-3/4"	1-3/4"
	8' - 9"	2-1/8"	1-7/8"
	9' - 1"	2-1/8"	2"
110.0	4' - 0"	1-5/8"	1"
	6' - 0"	1-5/8"	1-1/4"
	8' - 3"	1-3/4"	1-3/4"
120.0	4' - 0"	1-5/8"	1"
	6' - 0"	1-5/8"	1-1/4"
	7' - 7"	1-5/8"	1-5/8"
130.0	4' - 0"	1-5/8"	1"
	6' - 0"	1-5/8"	1-1/4"
	8' - 3"	1-7/8"	1-1/2"
140.0	4' - 0"	1-5/8"	1"
	6' - 0"	1-5/8"	1-1/4"
	6' - 6"	1-5/8"	1-3/8"
150.0	4' - 0"	1-5/8"	1"
	6' - 0"	1-5/8"	1-1/4"
	6' - 1"	1-5/8"	1-1/4"
198.0	4' - 0"	1-5/8"	1-1/8"
	5' - 0"	1-5/8"	1-1/8"
	6' - 0"	1-5/8"	1-3/8"
200.0	4' - 0"	1-5/8"	1-1/8"
	5' - 0"	1-5/8"	1-1/8"
	5' - 11"	1-5/8"	1-3/8"
220.0	4' - 0"	1-5/8"	1-1/8"
	5' - 0"	1-5/8"	1-1/4"
	5' - 4"	1-5/8"	1-1/4"
225.0	4' - 0"	1-5/8"	1-1/8"
	4' - 6"	1-5/8"	1-1/8"
	5' - 3"	1-5/8"	1-1/4"
250.0	4' - 0"	1-5/8"	1-1/8"
	4' - 3"	1-5/8"	1-1/8"
	4' - 9"	1-5/8"	1-1/8"
300.0	3' - 11"	1-5/8"	1-1/8"

TABLE 5 — ACCORDION SHUTTER SPAN SCHEDULE FOR ALL MOUNTING CONDITIONS

DESIGN WIND LOAD W (P.S.F)	POSITIVE WIND LOAD L max. (FT - IN)	NEGATIVE WIND LOAD L max. (FT - IN)
33.8	14' - 3"	18' - 0"
35.0	14' - 2"	17' - 8"
40.0	13' - 8"	16' - 6"
45.0	13' - 3"	15' - 7"
50.0	12' - 11"	14' - 9"
55.0	12' - 8"	13' - 7"
60.0	12' - 4"	12' - 5"
61.8	12' - 1"	12' - 1"
76.0	11' - 8"	12' - 0"
80.0	11' - 5"	11' - 5"
85.0	10' - 9"	10' - 9"
90.0	10' - 2"	10' - 2"
95.0	9' - 7"	9' - 7"
100.0	9' - 1"	9' - 1"
105.0	8' - 8"	8' - 8"
110.0	8' - 3"	8' - 3"
115.0	7' - 11"	7' - 11"
120.0	7' - 7"	7' - 7"
125.0	7' - 3"	7' - 3"
130.0	7' - 0"	7' - 0"
135.0	6' - 9"	6' - 9"
140.0	6' - 6"	6' - 6"
145.0	6' - 3"	6' - 3"
150.0	6' - 1"	6' - 1"
160.0	6' - 0"	6' - 0"
170.0	5' - 11"	5' - 11"
180.0	5' - 10"	5' - 10"
190.0	5' - 9"	5' - 9"
200.0	5' - 8"	5' - 8"
220.0	5' - 4"	5' - 4"

TABLE 5 NOTES:

1. DETERMINE BOTH THE POSITIVE AND THE NEGATIVE WIND LOADS. CHECK THEIR RESPECTIVE SPANS AND USE THE LESSER VALUE OF THE TWO.
2. FOR DESIGN LOADS BETWEEN TABULATED VALUES USE NEXT HIGHER LOAD OR LINEAR INTERPOLATION MAY BE USED TO DETERMINE ALLOWABLE SPANS.

TABLE 4 NOTE:

1. ENTER TABLE 4 WITH POSITIVE DESIGN LOAD TO DETERMINE MIN. STORM SHUTTER SEPARATION FROM GLASS.

Approved as complying with the Florida Building Code
Date: 10/16/2006
NOA: 06-0920.15
Miami-Dade Product Control
Building Division
By: Helena A. Molina

Thornton-Tomasetti Group
330 N. Andrews Ave., Suite 430 • Ft. Lauderdale, FL 33301
Tel. (954) 522-3690 • Fax (954) 522-3691 • COA # 7519
Website: www.TheTTGroup.com

Copyright © 2006 Thornton-Tomasetti Group, Inc.
CENTERFOLD LICENSED BY CENTERFOLD SHUTTER GROUP, INC.

CENTERFOLD ACCORDION SHUTTER

Tropic Hurricane Shutters Inc.
3804 N.W. 125TH STREET
OPA-LOCKA, FL 33054
TEL: (305) 681-3661
FAX: (305) 681-3663

John W. Knezevich
Professional Engineer
FL License No.: PE 0041961

JUN 28 2006

revisions

no	date	by	description
1	04/08/04	VJK	COUNTY COMMENTS
2	06/10/04	ZMS	COUNTY COMMENTS
3	08/10/05	JWK	2004 CODE

CSG I.D. #06062805484D

date: 09/12/2002
scale: AS NOTED
drawn by: MCR
design by: JWK
checked by: VJK
drawing no. 06-432
sheet 3 of 10

Print Information: P:\FL1\KA\CADD\Associations\Centerfold\TropicHS\06-432\R3-sub\06-432-03.dwg MCantu 06/28/2006 03:48:06pm 06/28/06 15:45

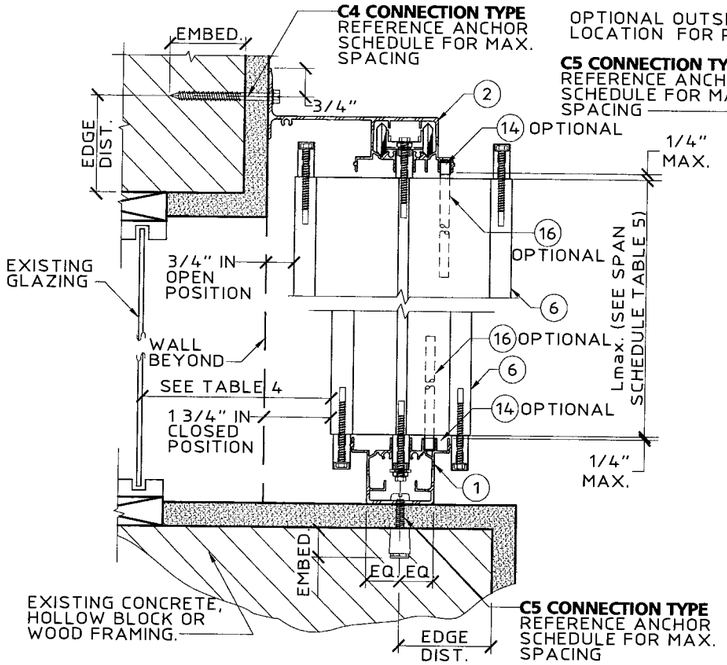

A1- WALL MOUNT
A2- FLOOR/ CEILING MOUNT
SCALE: 3" = 1' - 0"

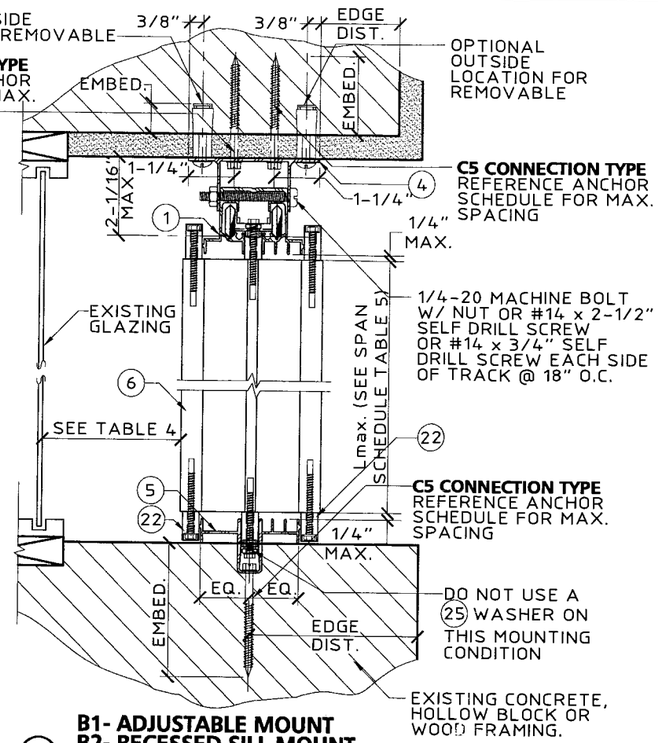

B1- ADJUSTABLE MOUNT
B2- RECESSED SILL MOUNT
SCALE: 3" = 1' - 0"

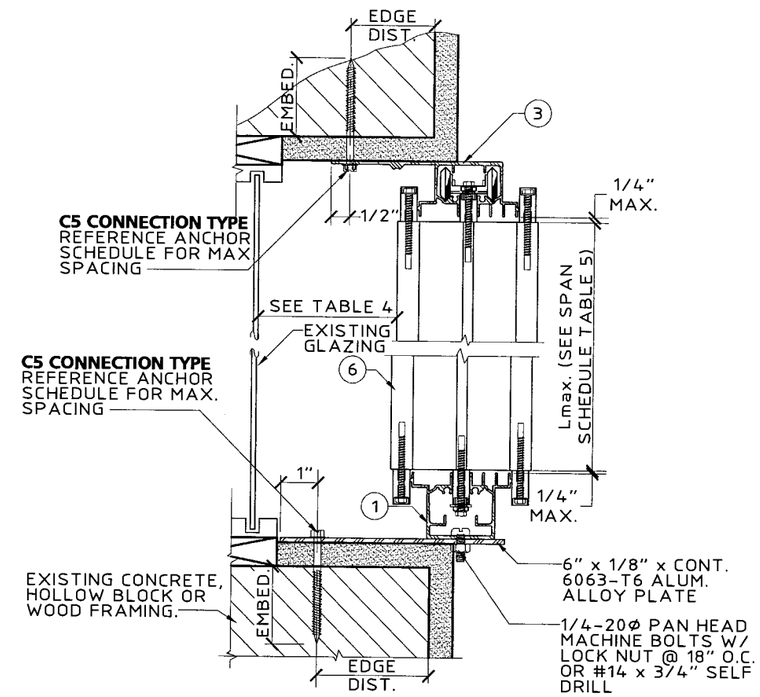

C1- INSIDE MOUNT
C2- ADJUSTABLE INSIDE MOUNT
SCALE: 3" = 1' - 0"

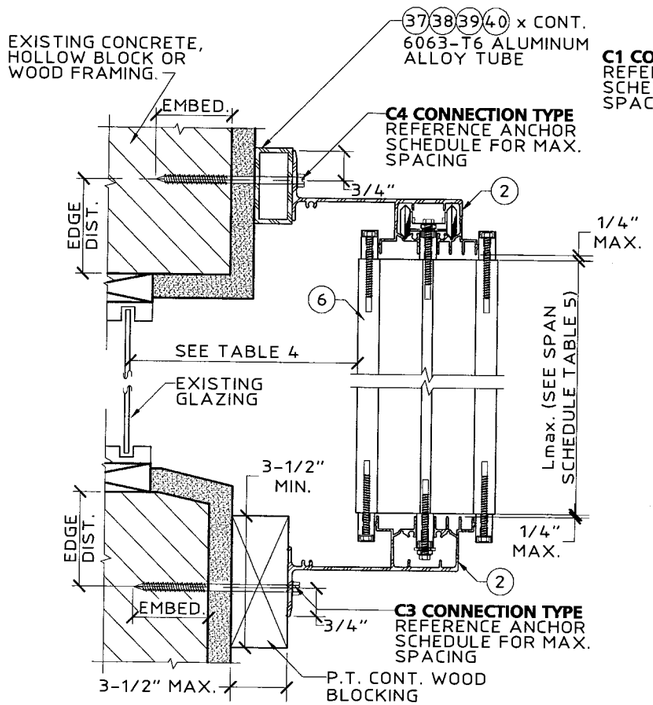

D1- ALUM. TUBE BUILD OUT MOUNT
D2- WOOD BUILD OUT MOUNT
SCALE: 3" = 1' - 0"

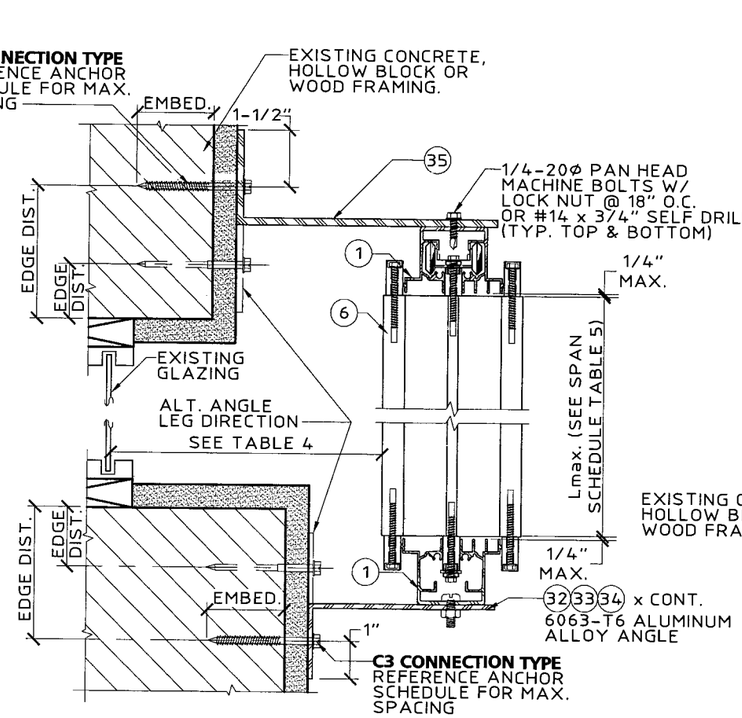

E1- 3/16" ANGLE BUILD OUT MOUNT
E2- 1/8" ANGLE BUILD OUT MOUNT
SCALE: 3" = 1' - 0"

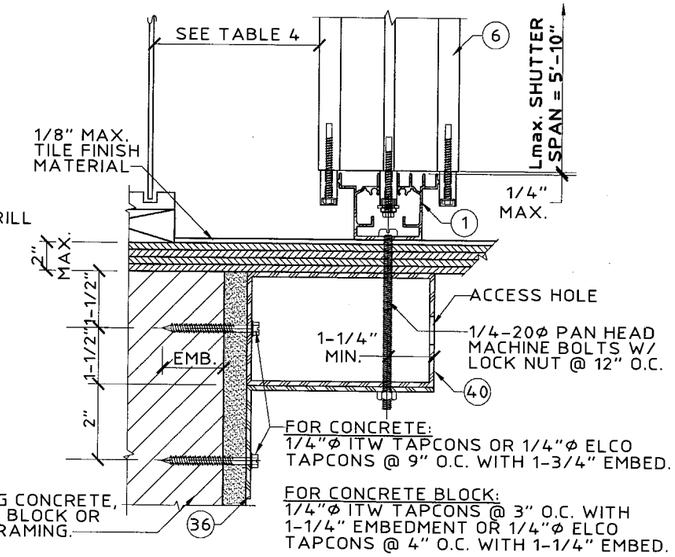

LIMITED TO ±72 P.S.F. DESIGN LOAD
Lmax. SHUTTER SPAN = 5'-10"

"PASS THRU" MOUNT
SCALE: 3" = 1' - 0"

Approved as complying with the Florida Building Code
Date 10/16/2006
Product Control Number 06-0920.15
Product Control Section
By

Thornton-Tomasetti Group
330 N. Andrews Ave., Suite 450 • Ft. Lauderdale, FL 33301
Tel. (954) 522-3690 • Fax (954) 522-3691 • COA # 7519
Website: www.TheTTGroup.com

Copyright © 2006 Thornton-Tomasetti Group, Inc.
CENTERFOLD LICENSED BY CENTERFOLD SHUTTER GROUP, INC.

CENTERFOLD ACCORDION SHUTTER

Tropic Hurricane Shutters Inc.
3804 N.W. 12ST H STREET
OPA-LOCKA, FL 33054
TEL: (305) 681-3661
FAX: (305) 681-3663

John W. Knezevich
Professional Engineer
FL License No.: PE 0041961

JUN 28 2006

revisions

no	date	by	description
1	04/08/04	VJK	COUNTY COMMENTS
2	06/10/04	ZMS	COUNTY COMMENTS
3	08/10/05	JWK	2004 CODE

CSG I.D. #06062805484D

date	09/12/2002
scale AS NOTED	drawn by MCR
design by JWK	checked by VJK
drawing no.	06-432
sheet 4 of 10	

Print Information: P:\FL1\KA\CADD\Associations\Centerfold\TropicHSI\06-432\R3-sub\06-432-04.dwg MCantu 06/28/2006 03:48:12pm 06/28/06 15:45

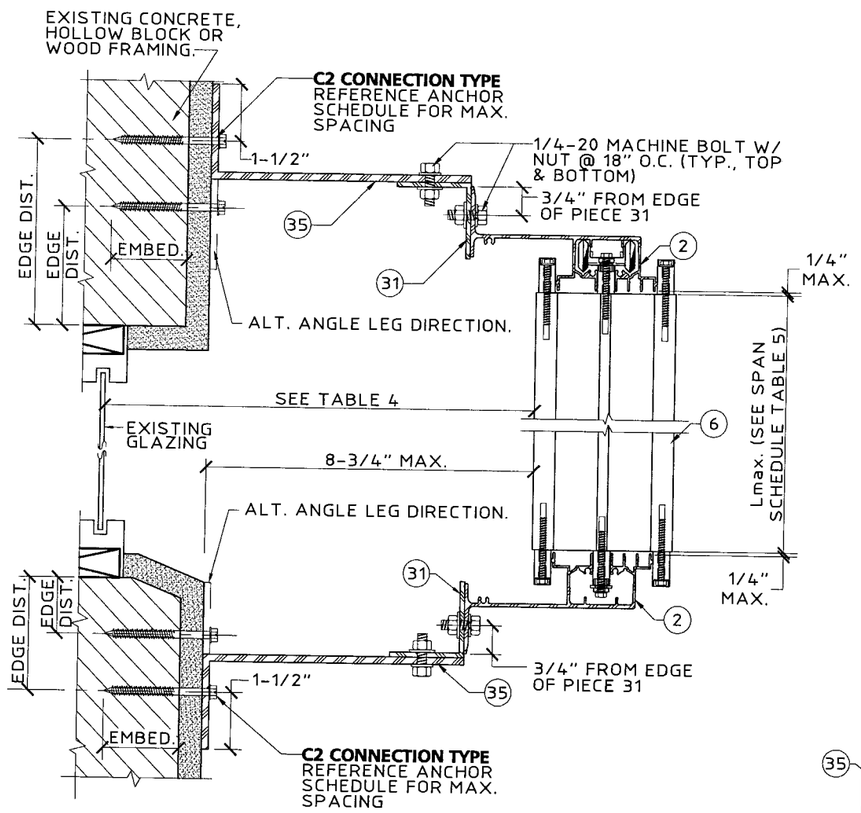

G BUILD-OUT MOUNT SECTION
SCALE: 3" = 1'-0"

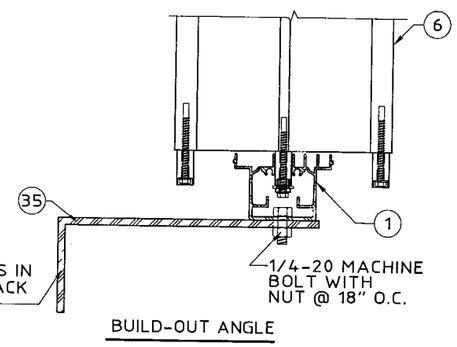

H RADIUS CURVE MOUNT
SCALE: 3" = 1' - 0"

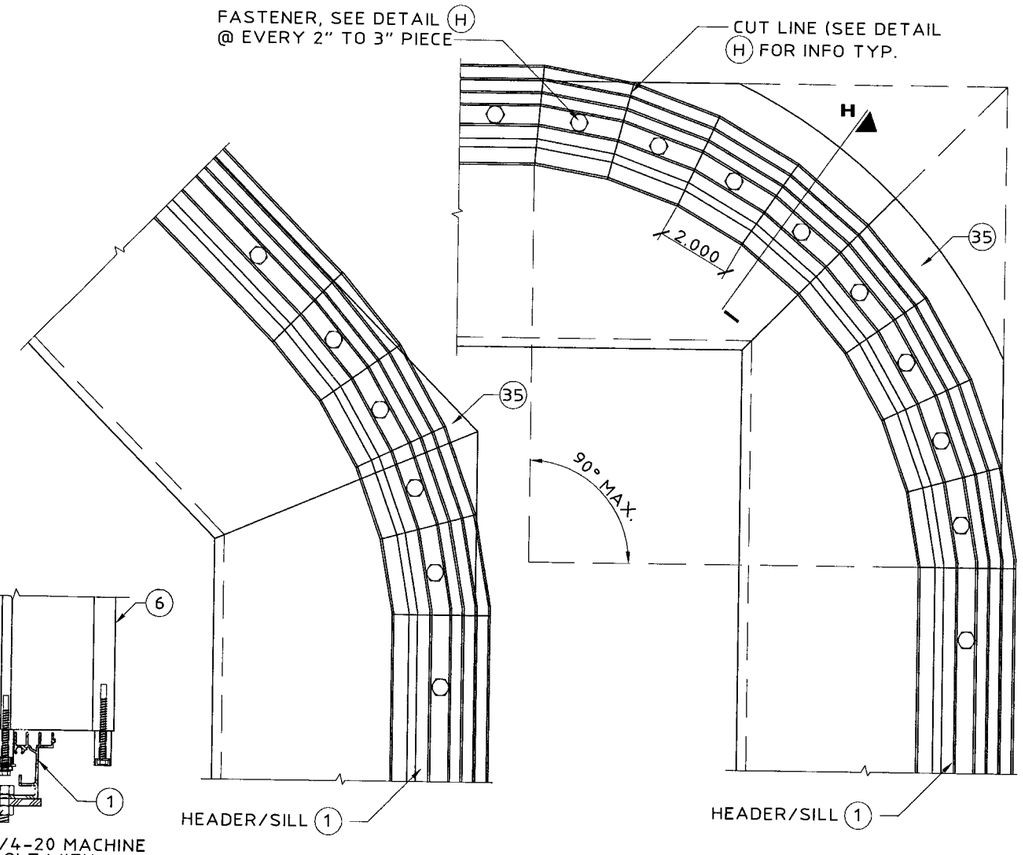

I RADIUS CURVE MOUNT (PLAN VIEW)
SCALE: 3" = 1' - 0"

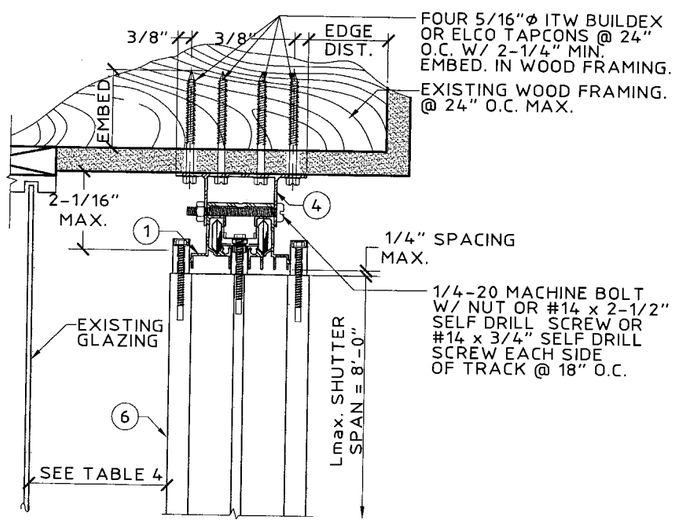

LIMITED TO ±72 P.S.F. DESIGN LOAD
Lmax. SHUTTER SPAN = 8'- 0"

J SOFFIT MOUNT
SCALE: 3" = 1' - 0"

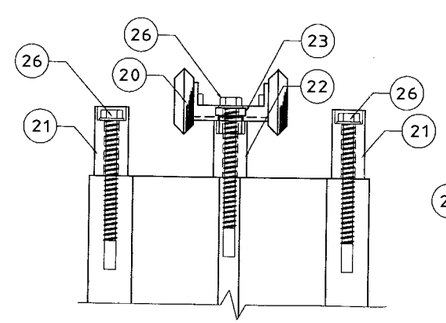

K TOP BUSHINGS & ROLLER ASSEMBLY
SCALE: HALF SIZE

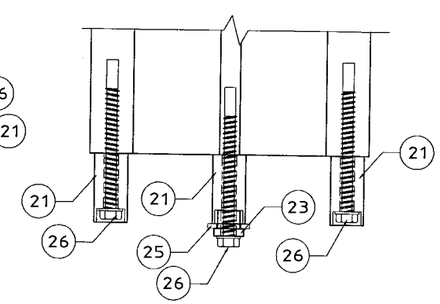

PATENT PENDING

L COMPLETE BOTTOM BUSHINGS ASSEMBLY
SCALE: HALF SIZE

10/16/2006
06-0920.15

Thornton-Tomasetti Group
330 N. Andrews Ave., Suite 450 • Ft. Lauderdale, FL 33301
Tel. (954) 522-3690 • Fax (954) 522-3691 • COA # 7519
Website: www.TheTTGroup.com

Copyright © 2006 Thornton-Tomasetti Group, Inc.
CENTERFOLD LICENSED BY CENTERFOLD SHUTTER GROUP, INC.

CENTERFOLD ACCORDION SHUTTER

Tropic Hurricane Shutters Inc.
3804 N.W. 125TH STREET
OPA-LOCKA, FL 33054
TEL: (305) 681-3661
FAX: (305) 681-3663

John W. Knezevich
Professional Engineer
FL License No.: PE 0041961

JUN 28 2006

revisions

no	date	by	description
1	04/08/04	VJK	COUNTY COMMENTS
2	06/10/04	ZHS	COUNTY COMMENTS
3	08/10/05	JWK	2004 CODE

CSG I.D. #060628054 84D

date 09/12/2002
scale AS NOTED
drawn by MCR
design by JWK
checked by VJK
drawing no. 06-432
sheet 5 of 10

Print Information: P:\FL1\KA\CADD\Associations\Centerfold\TropicHS\06-432\R3-sub\06-432-05.dwg MCantu 06/28/2006 03:48:17pm 06/28/06 15:45

Print Information: P:\FL1\KA\CADD\Associations\Centerfold\TropicHSI\06-432\R3-sub\06-432-06.dwg MCantu 06/28/2006 03:48:22pm 06/28/06 15:45

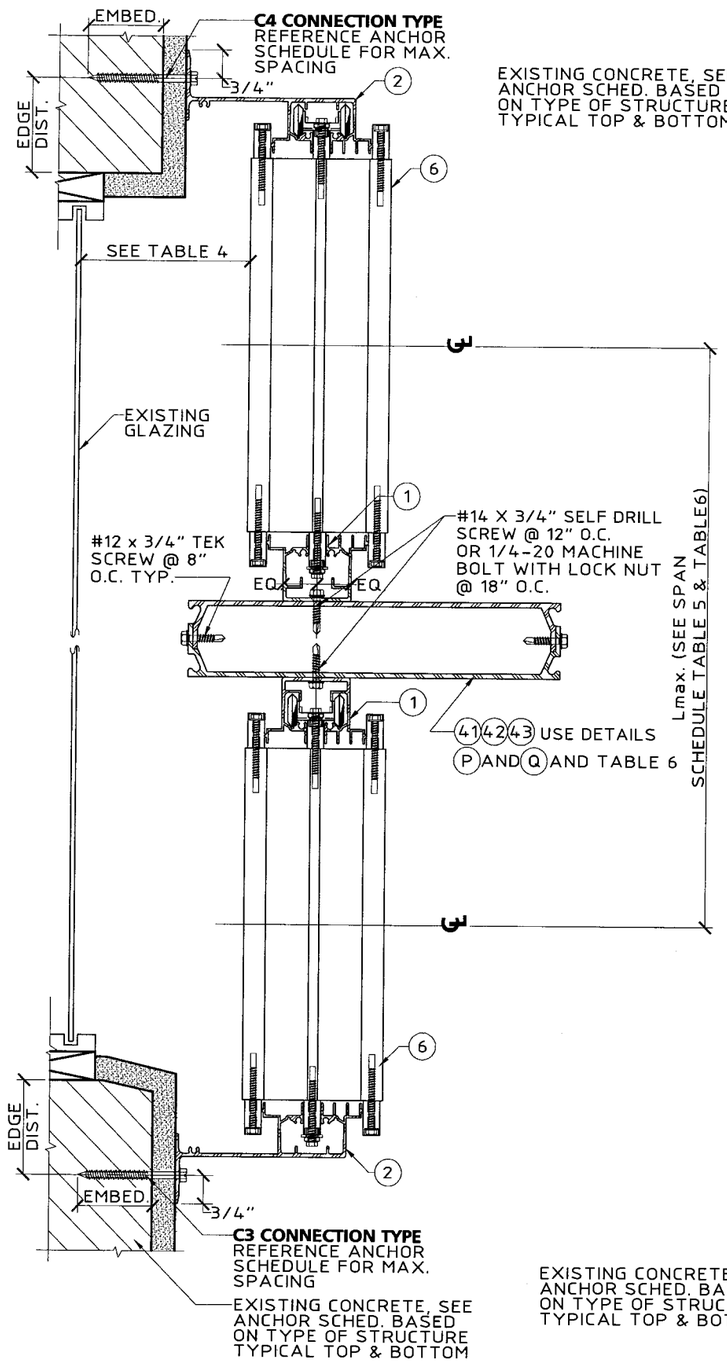

M DOUBLE SHUTTER CARRY BEAM MOUNT
SCALE: 3" = 1' - 0"

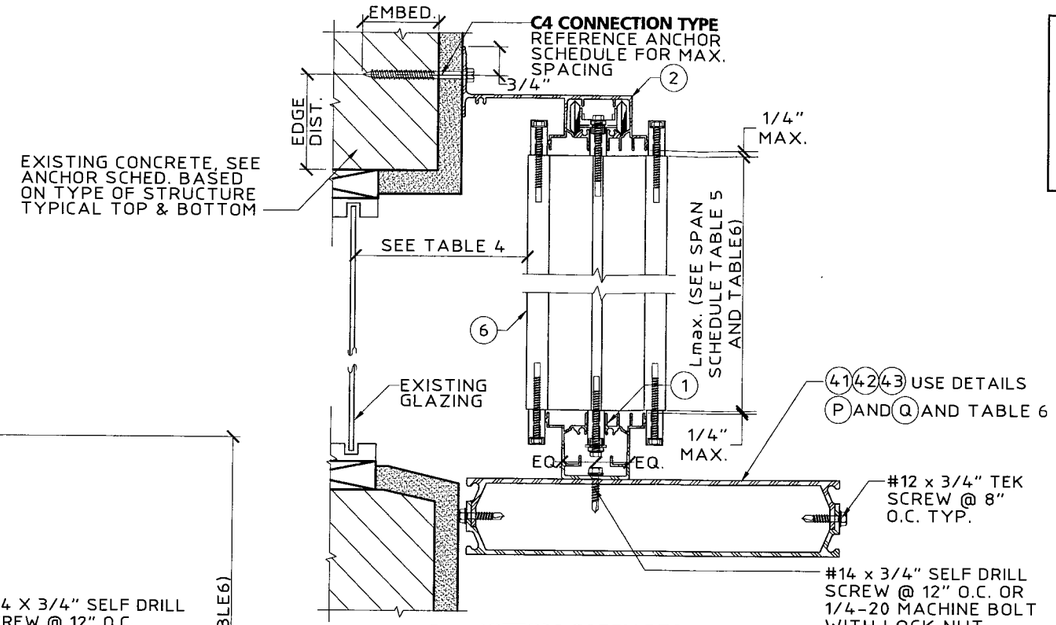

N BOTTOM CARRY BEAM MOUNT
SCALE: 3" = 1' - 0"

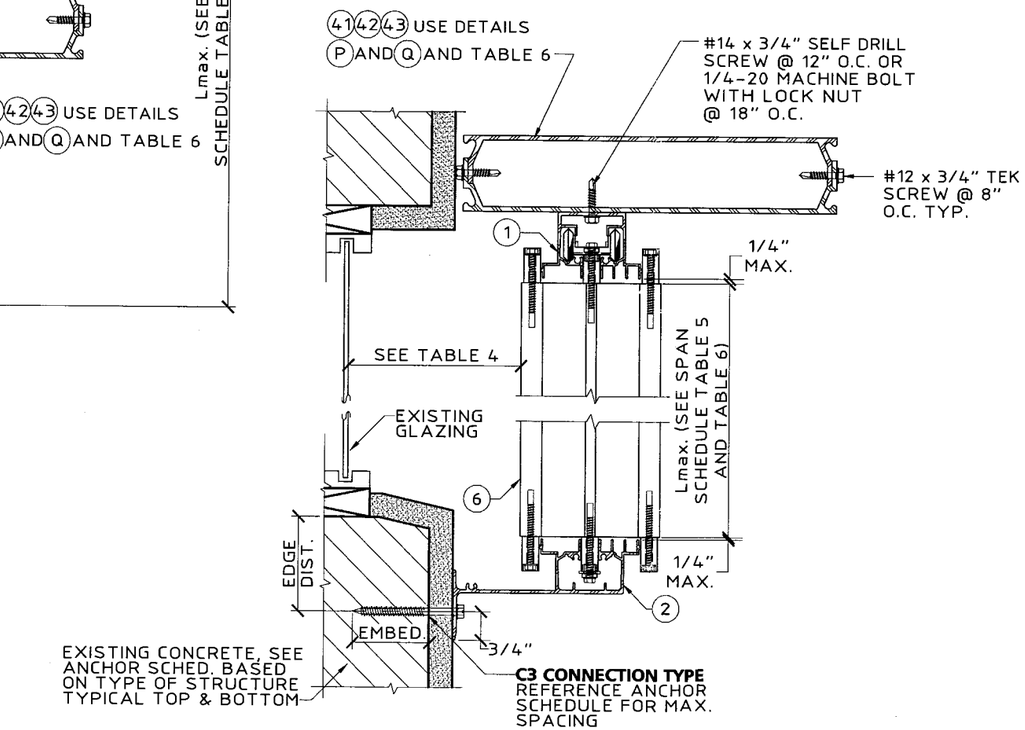

O TOP CARRY BEAM MOUNT
SCALE: 3" = 1' - 0"

TABLE 6 — ALUM. CARRY BEAM & SHUTTER SCHEDULE

COMP. No.	WALL CONNECTION	SHUTTER SPAN L.max.	DETAIL N BOTTOM BEAM SPAN	DETAIL O TOP BEAM SPAN	DETAIL M CENTER BEAM SPAN
41	TYPE 1	4' - 0"	10' - 8"	8' - 4"	8' - 0"
	TYPE 1	6' - 0"	9' - 3"	7' - 6"	6' -6"
	TYPE 1	8' - 0"	8' - 0"	7' - 0"	5' - 8"
	TYPE 1	10' - 0"	7' - 2"	6' - 8"	5' - 1"
	TYPE 1	12' - 0"	6' - 6"	6' - 4"	4' - 7"
	TYPE 1	14' - 0"	6' - 1"	6' - 1"	4' - 3"
	TYPE 2	16' - 0"	5' - 8"	5' - 8"	4' - 0"
	TYPE 2	18' - 0"	5' - 4"	5' - 4"	3' - 9"
42	TYPE 1	4' - 0"	15' - 1"	9' - 7"	11' - 6"
	TYPE 1	6' - 0"	13' - 2"	8' - 7"	9' - 6"
	TYPE 2	8' - 0"	11' - 6"	8' - 0"	8' - 3"
	TYPE 2	10' - 0"	10' - 4"	7' - 7"	7' - 5"
	TYPE 2	12' - 0"	9' - 6"	7' - 3"	6' - 9"
	TYPE 2	14' - 0"	8' - 10"	7' - 0"	6' - 3"
	TYPE 3	16' - 0"	8' - 3"	6' - 9"	5' - 10"
	TYPE 3	18' - 0"	7' - 9"	6' - 6"	5' - 6"
43	TYPE 1	4' - 0"	19' - 11"	10' - 9"	15' - 2"
	TYPE 2	6' - 0"	17' - 5"	9' - 9"	12' - 7"
	TYPE 2	8' - 0"	15' - 2"	9' - 1"	11' - 0"
	TYPE 3	10' - 0"	13' - 8"	8' - 7"	9' - 10"
	TYPE 3	12' - 0"	12' - 7"	8' - 2"	9' - 0"
	TYPE 3	14' - 0"	11' - 8"	7' - 10"	8' - 5"
	TYPE 4	16' - 0"	11' - 0"	7' - 7"	7' - 11"
	TYPE 4	18' - 0"	10' - 4"	7' - 5"	7' - 5"

NOTE:

1. USE BEAM SCHEDULE FOR DETAILS M, N AND O.
2. MAX. DESIGN PRESSURE AND ALLOWABLE SHUTTER SPAN SHALL BE LIMITED TO THOSE SHOWN IN TABLE 5.
3. FOR CARRY BEAM WALL CONNECTION DETAIL SHUTTER SPAN AS SHOWN IN TABLE 6 SHALL BE USED.
4. BEAM SPAN SHALL BE CONSIDERED AS THE DISTANCE FROM ℄ OF SUPPORT TO ℄ OF SUPPORT.
5. DESIGN PRESSURE USED WITH CARRY BEAMS 41, 42 AND 43 IS LIMITED TO 72 P.S.F. (MAX.).

Approved in accordance with the Broward County Land Development Code and the Broward County Amendments to the Florida Building Code
Date: 10/16/2006
Permit No. 06-0920-15
By: Helmy A. Hafez

Thornton-Tomasetti Group
330 N. Andrews Ave., Suite 450 • Ft. Lauderdale, FL 33301
Tel. (954) 522-3690 • Fax (954) 522-3691 • COA # 7519
Website: www.TheTTGroup.com

Copyright © 2006 Thornton-Tomasetti Group, Inc.
CENTERFOLD LICENSED BY CENTERFOLD SHUTTER GROUP, INC.

CENTERFOLD ACCORDION SHUTTER

Tropic Hurricane Shutters Inc.
3804 N.W. 125TH STREET
OPA-LOCKA, FL 33054
TEL: (305) 681-3661
FAX: (305) 681-3663

John W. Knezevich
Professional Engineer
FL License No.: PE 0041961

JUN 28 2006

revisions

no	date	by	description
1	04/08/04	VJK	COUNTY COMMENTS
2	06/10/04	ZMS	COUNTY COMMENTS
3	08/10/05	JWK	2004 CODE

CSG I.D. #06062805484D

date 09/12/2002	
scale AS NOTED	drawn by MCR
design by JWK	checked by VJK
drawing no. 06-432	
sheet 6 of 10	

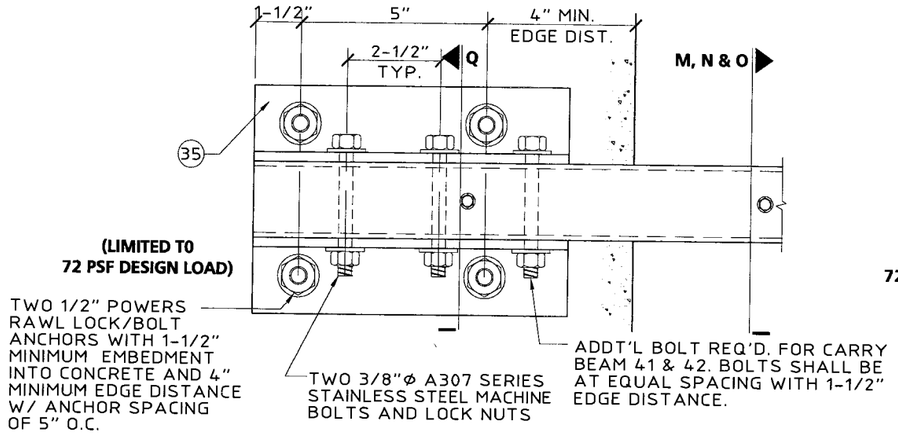

(P) CARRY BEAM WALL CONNECTION - TYPE 1 INTO 3,000 PSI (MIN.) CONCRETE WALL ONLY
SCALE: 3" = 1' - 0"

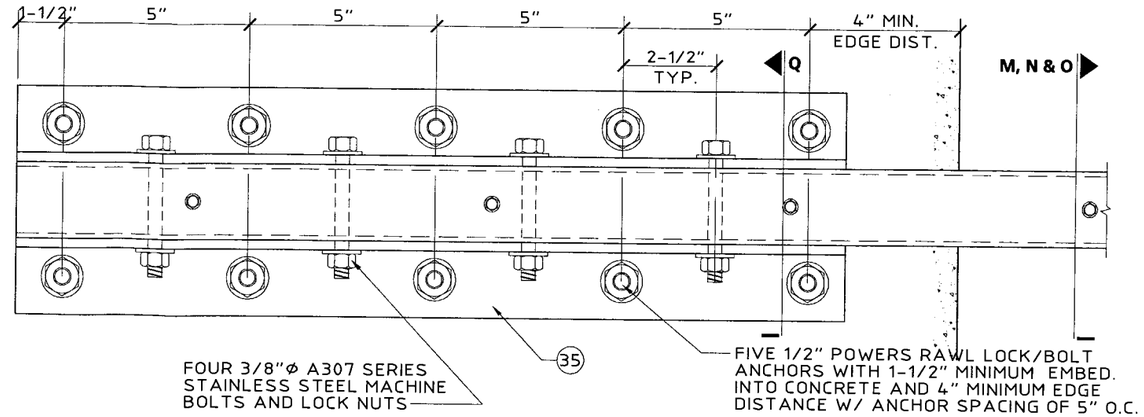

(P) CARRY BEAM WALL CONNECTION - TYPE 4 INTO 3,000 PSI (MIN.) CONCRETE WALL ONLY
SCALE: 3" = 1' - 0"

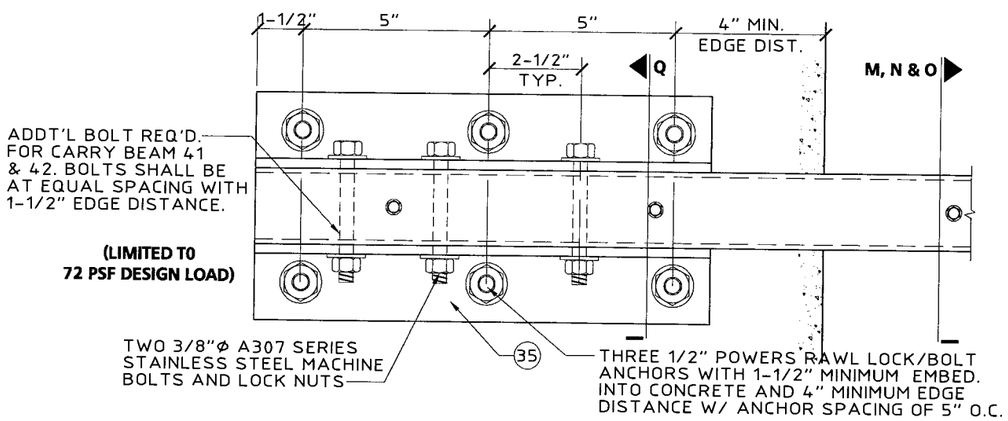

(P) CARRY BEAM WALL CONNECTION - TYPE 2 INTO 3,000 PSI (MIN.) CONCRETE WALL ONLY
SCALE: 3" = 1' - 0"

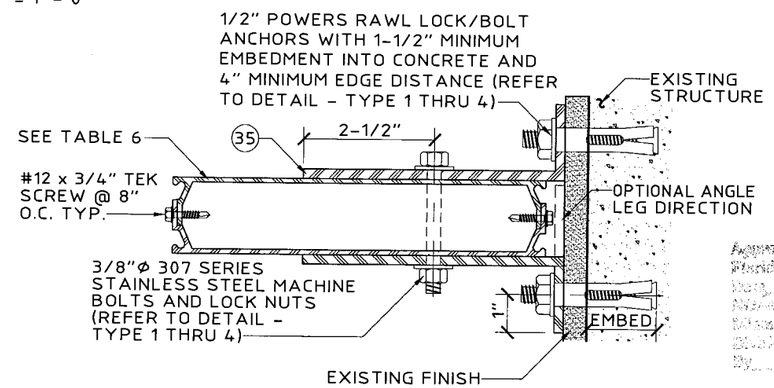

(Q) CARRY BEAM WALL CONNECTION
SCALE: 3" = 1' - 0"

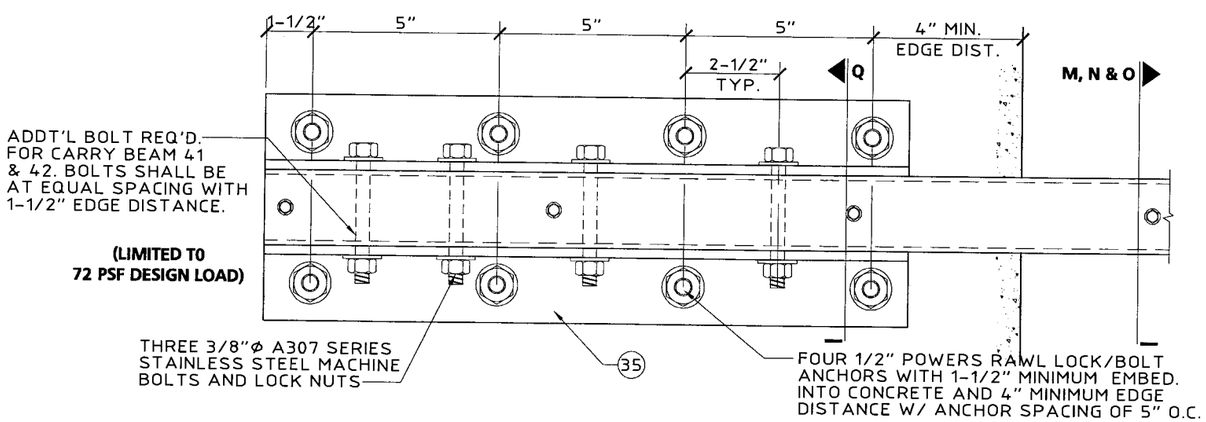

(P) CARRY BEAM WALL CONNECTION - TYPE 3 INTO 3,000 PSI (MIN.) CONCRETE WALL ONLY
SCALE: 3" = 1' - 0"

ANCHOR NOTES:

1. **SPANS AND LOADS SHOWN HERE ARE FOR DETERMINING ANCHOR SPACING ONLY. ALLOWABLE STORM SHUTTER SPANS FOR SPECIFIC LOADS MUST BE LIMITED TO THOSE SHOWN IN TABLE 5.**
2. ENTER ANCHOR SCHEDULE BASED ON THE EXISTING STRUCTURE MATERIAL, ANCHOR TYPE AND EDGE DISTANCE. SELECT DESIGN LOAD GREATER THAN OR EQUAL TO NEGATIVE DESIGN LOAD ON SHUTTER AND SELECT SPAN GREATER THAN OR EQUAL TO SHUTTER SPAN.
3. SEE MOUNTING SECTION DETAILS FOR IDENTIFICATION OF CONNECTION TYPE.
4. EXISTING STRUCTURE MAY BE CONCRETE, HOLLOW BLOCK OR WOOD FRAMING. REFERENCE ANCHOR SCHEDULE FOR PROPER ANCHOR TYPE BASED ON TYPE OF EXISTING STRUCTURE AND APPROPRIATE CONNECTION TYPE. SEE CONNECTION DETAILS FOR IDENTIFICATION OF CONNECTION TYPE.
5. ANCHORS SHALL BE INSTALLED IN ACCORDANCE WITH MANUFACTURERS' RECOMMENDATIONS. EMBEDMENT LENGTHS SHALL BE AS NOTED AND DO NOT INCLUDE STUCCO OR OTHER FINISHES.
6. WHERE EXISTING STRUCTURE IS WOOD FRAMING, WOOD FRAMING CONDITIONS VARY. FIELD VERIFY THAT FASTENERS ARE INTO ADEQUATE WOOD FRAMING MEMBERS, NOT PLYWOOD. FASTENING TO PLYWOOD IS ACCEPTABLE ONLY FOR SIDE CLOSURE PIECES.
7. WHERE 1/4"Ø AND 5/16"Ø TAPCONS ARE FASTENED TO NARROW FACE OF STUD FRAMING, FASTENER SHALL BE LOCATED IN CENTER OF NOMINAL 2" x 4" (MIN.) WOOD STUD. 3/4" EDGE DISTANCE IS ACCEPTABLE FOR WOOD FRAMING. WOOD STUD SHALL BE "SOUTHERN PINE" G=0.55 OR GREATER DENSITY.
8. MACHINE SCREWS SHALL HAVE MINIMUM OF 1/2" ENGAGEMENT OF THREADS IN BASE ANCHOR AND MAY HAVE EITHER A PAN HEAD, TRUSS HEAD, OR WAFER HEAD (SIDEWALK BOLT), U.O.N.
9. DESIGNATES ANCHOR CONDITIONS WHICH ARE NOT ACCEPTABLE USES.
10. * DESIGNATES ANCHORS WHICH ARE REMOVABLE BY REMOVING MACHINE SCREW, NUT OR WASHERED WINGNUT.
11. FASTENER MAXIMUM SPACING ARE BASED ON FACTOR OF SAFETY OF 4:1 ON TENSION AND SHEAR VALUES WITH THE EXCEPTION OF THE 1/4"Ø AND 5/16"Ø TAPCONS WHICH ARE BASED ON NDS REQUIREMENTS AND MIAMI-DADE COUNTY TESTING REQUIREMENTS RESPECTIVELY.

Approved as noted but not to be installed until Miami-Dade County Product Control Approval is issued
10/16/2006
06-0920.15
Helmy H. Khalil

Thornton-Tomasetti Group
330 N. Andrews Ave., Suite 450 • Ft. Lauderdale, FL 33301
Tel. (954) 522-3690 • Fax (954) 522-3691 • COA # 7519
Website: www.TheTTGroup.com

Copyright © 2006 Thornton-Tomasetti Group, Inc.
CENTERFOLD LICENSED BY CENTERFOLD SHUTTER GROUP, INC.

CENTERFOLD ACCORDION SHUTTER

Tropic Hurricane Shutters Inc.
3804 N.W. 125TH STREET
OPA-LOCKA, FL 33054
TEL: (305) 681-3661
FAX: (305) 681-3663

John W. Knezevich
Professional Engineer
FL License No.: PE 0041961

JUN 28 2006

revisions

no	date	by	description
1	04/08/04	VJK	COUNTY COMMENTS
2	06/10/06	ZMS	COUNTY COMMENTS
3	08/10/05	JWK	2004 CODE

CSG I.D. #060628054 84D

date 09/12/2002
scale AS NOTED
drawn by MCR
design by JWK
checked by VJK
drawing no. 06-432
sheet 7 of 10

Print Information: P:\FL1\KA\CADD\Associations\Centerfold\TropicHSI\06-432\R3-sub\06-432-07.dwg MCantu 06/28/2006 03:48:27pm 06/28/06 15:45

ANCHOR SCHEDULE

FASTENER MAXIMUM SPACING (INCHES) REQUIRED FOR VARIOUS DESIGN LOADS AND SPANS

Min. 2" Edge Distance

EXIST. STRUC.	ANCHOR TYPE	LOAD (W) P.S.F. MAX. (SEE NOTE 1)	SPANS UP TO 3'-6" (SEE NOTE 1) CONNECTION TYPE (SEE NOTE 3)					SPANS UP TO 5'-6" (SEE NOTE 1) CONNECTION TYPE (SEE NOTE 3)					SPANS UP TO 7'-6" (SEE NOTE 1) CONNECTION TYPE (SEE NOTE 3)					SPANS UP TO 9'-6" (SEE NOTE 1) CONNECTION TYPE (SEE NOTE 3)				
			C1	C2	C3	C4	C5	C1	C2	C3	C4	C5	C1	C2	C3	C4	C5	C1	C2	C3	C4	C5
CONCRETE	44 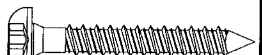 5/16"Ø ITW TAPCON W/ 1-3/4" MIN. EMBEDMENT	35.0	18	18	18	18	18	18	18	18	18	11	18	18	18	18	8	18	18	18	18	8
		45.0	18	18	18	18	14	18	18	18	18	9	18	18	18	18	6	18	18	18	18	6
		55.0	18	18	18	18	11	18	18	18	18	7	15	15	15	15	5	15	15	15	15	5
		65.0	18	18	18	18	9	17	17	17	17	6	12	12	12	12	4	12	12	12	12	4
		75.0	18	18	18	18	8	15	15	15	15	5	11	11	7	11	3	11	11	7	11	3
		85.0	18	18	18	18	7	13	13	13	13	4	9	9	5	9	3	9	9	5	9	3
		95.0	18	18	18	18	6	11	11	9	11	4	8	8	4	6	3	8	8	4	6	3
		145.0	12	12	11	12	4	7	7	3	4		5					5				
		195.0	9	9	4	7	3	5					5					5				
	(MIN. 3,000 P.S.I. CONCRETE)	330.0	5					5					5					5				
	45 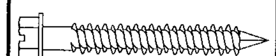 5/16"Ø ELCO TAPCON W/ 1-3/4" MIN. EMBEDMENT	35.0	18	18	18	18	18	18	18	18	18	16	18	18	18	18	12	18	18	18	18	12
		45.0	18	18	18	18	18	18	18	18	18	12	18	18	18	18	9	18	18	18	18	9
		55.0	18	18	18	18	16	18	18	18	18	10	18	18	18	18	7	18	18	18	18	7
		65.0	18	18	18	18	14	18	18	18	18	8	18	18	18	18	6	18	18	18	18	6
		75.0	18	18	18	18	12	18	18	18	18	7	17	17	11	17	5	17	17	11	17	5
		85.0	18	18	18	18	10	18	18	18	18	6	15	15	8	15	5	15	15	8	15	5
		95.0	18	18	18	18	9	18	18	15	18	6	13	13	6	10	4	13	13	6	10	4
		145.0	18	18	17	18	6	12	12	5	7	4	8	4		3		8	4		3	
		195.0	14	14	7	11	4	9	4		3		8	3		3		8	3		3	
	(MIN. 3,000 P.S.I. CONCRETE)	330.0	8	3		3		8	3		3		8	3		3		8	3		3	
	46 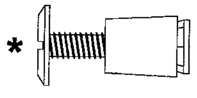 * 1/4"Ø ALL POINTS SOLID-SET ANCHOR W/ 7/8" EMBEDMENT & 1/4-20 STAINLESS STEEL MACHINE SCREW	35.0	18	18	18	18	18	18	18	18	18	17	18	18	18	18	12	18	18	18	18	12
		45.0	18	18	18	18	18	18	18	18	18	13	18	18	18	18	9	18	18	18	18	9
		55.0	18	18	18	18	17	18	18	18	18	11	18	18	18	18	8	18	18	18	18	8
		65.0	18	18	18	18	14	18	18	18	18	9	18	18	18	18	6	18	18	18	18	6
		75.0	18	18	18	18	12	18	18	18	18	8	18	18	12	18	5	18	18	12	18	5
		85.0	18	18	18	18	11	18	18	18	18	7	15	15	8	15	5	15	15	8	15	5
		95.0	18	18	18	18	10	18	18	16	18	6	14	14	6	10	4	14	14	6	10	4
		145.0	18	18	18	18	6	12	12	5	7	4	9	4	3	3	3	9	4	3	3	3
		195.0	14	14	7	12	4	9	4	3	4	3	8	3		3		8	3		3	
	(MIN. 3,000 P.S.I. CONCRETE)	330.0	8	3		3		8	3		3		8	3		3		8	3		3	
	47 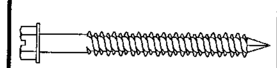 1/4"Ø ITW TAPCON W/ 1-3/4" MIN. EMBEDMENT	35.0	18	18	18	18	18	18	18	18	18	15	18	18	18	18	11	18	18	18	18	11
		45.0	18	18	18	18	18	18	18	18	18	12	18	18	18	18	8	18	18	18	18	8
		55.0	18	18	18	18	15	18	18	18	18	9	18	18	18	18	7	18	18	18	18	7
		65.0	18	18	18	18	13	18	18	18	18	8	18	18	18	18	6	18	18	18	18	6
		75.0	18	18	18	18	11	18	18	18	18	7	18	18	12	18	5	18	18	12	18	5
		85.0	18	18	18	18	10	18	18	18	18	6	16	16	8	16	4	16	16	8	16	4
		95.0	18	18	18	18	9	18	18	16	18	5	14	14	6	10	4	14	14	6	10	4
		145.0	18	18	18	18	5	12	12	5	7	3	9	4	3	4		9	4	3	4	
		195.0	15	15	7	12	4	9	4	3	4		8	3		3		8	3		3	
	(MIN. 3,000 P.S.I. CONCRETE)	330.0	8	3		3		8	3		3		8	3		3		8	3		3	
	48 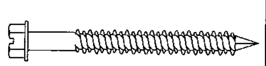 1/4"Ø ELCO TAPCON W/ 1-3/4" MIN. EMBEDMENT	35.0	18	18	18	18	18	18	18	18	18	17	18	18	18	18	12	18	18	18	18	12
		45.0	18	18	18	18	18	18	18	18	18	13	18	18	18	18	9	18	18	18	18	9
		55.0	18	18	18	18	17	18	18	18	18	11	18	18	18	18	8	18	18	18	18	8
		65.0	18	18	18	18	14	18	18	18	18	9	18	18	18	18	6	18	18	18	18	6
		75.0	18	18	18	18	12	18	18	18	18	8	18	18	13	18	5	18	18	13	18	5
		85.0	18	18	18	18	11	18	18	18	18	7	16	16	9	16	5	16	16	9	16	5
		95.0	18	18	18	18	10	18	18	17	18	6	14	14	6	11	4	14	14	6	11	4
		145.0	18	18	18	18	6	13	13	5	8	4	9	4	3	4	3	9	4	3	4	3
		195.0	15	15	7	12	4	9	4	3	4	3	8	3		3		8	3		3	
	(MIN. 3,000 P.S.I. CONCRETE)	330.0	9	3		3		8	3		3		8	3		3		8	3		3	

EXIST. STRUC.	ANCHOR TYPE	LOAD (W) P.S.F. MAX. (SEE NOTE 1)	SPANS UP TO 11'-6" (SEE NOTE 1) CONNECTION TYPE (SEE NOTE 3)					SPANS UP TO 13'-6" (SEE NOTE 1) CONNECTION TYPE (SEE NOTE 3)					SPANS UP TO 15'-6" (SEE NOTE 1) CONNECTION TYPE (SEE NOTE 3)					SPANS UP TO 17'-6" (SEE NOTE 1) CONNECTION TYPE (SEE NOTE 3)				
			C1	C2	C3	C4	C5	C1	C2	C3	C4	C5	C1	C2	C3	C4	C5	C1	C2	C3	C4	C5
CONCRETE	44 5/16"Ø ITW TAPCON W/ 1-3/4" MIN. EMBEDMENT	35.0	18	18	18	18	8	18	18	18	18	8	18	18	18	18	8	18	18	18	18	8
		45.0	18	18	18	18	6	18	18	18	18	6	18	18	18	18	6	18	18	18	18	6
		55.0	15	15	15	15	5	15	15	15	15	5	15	15	15	15	5	15	15	15	15	5
		65.0	12	12	12	12	4	12	12	12	12	4	12	12	12	12	4	12	12	12	12	4
		75.0	11	11	7	11	3	11	11	7	11	3	11	11	7	11	3	11	11	7	11	3
		85.0	9	9	5	9	3	9	9	5	9	3	9	9	5	9	3	9	9	5	9	3
		95.0	8	8	4	6	3	8	8	4	6	3	8	8	4	6	3	8	8	4	6	3
		145.0	5					5					5					5				
		195.0	5					5					5					5				
	(MIN. 3,000 P.S.I. CONCRETE)	330.0	5					5					5					5				
	45 5/16"Ø ELCO TAPCON W/ 1-3/4" MIN. EMBEDMENT	35.0	18	18	18	18	12	18	18	18	18	12	18	18	18	18	12	18	18	18	18	12
		45.0	18	18	18	18	9	18	18	18	18	9	18	18	18	18	9	18	18	18	18	9
		55.0	18	18	18	18	7	18	18	18	18	7	18	18	18	18	7	18	18	18	18	7
		65.0	18	18	18	18	6	18	18	18	18	6	18	18	18	18	6	18	18	18	18	6
		75.0	17	17	11	17	5	17	17	11	17	5	17	17	11	17	5	17	17	11	17	5
		85.0	15	15	8	15	5	15	15	8	15	5	15	15	8	15	5	15	15	8	15	5
		95.0	13	13	6	10	4	13	13	6	10	4	13	13	6	10	4	13	13	6	10	4
		145.0	8	4		3		8	4		3		8	4		3		8	4		3	
		195.0	8	3		3		8	3		3		8	3		3		8	3		3	
	(MIN. 3,000 P.S.I. CONCRETE)	330.0	8	3		3		8	3		3		8	3		3		8	3		3	
	46 * 1/4"Ø ALL POINTS SOLID-SET ANCHOR W/ 7/8" EMBEDMENT & 1/4-20 STAINLESS STEEL MACHINE SCREW	35.0	18	18	18	18	12	18	18	18	18	12	18	18	18	18	12	18	18	18	18	12
		45.0	18	18	18	18	9	18	18	18	18	9	18	18	18	18	9	18	18	18	18	9
		55.0	18	18	18	18	8	18	18	18	18	8	18	18	18	18	8	18	18	18	18	8
		65.0	18	18	18	18	6	18	18	18	18	6	18	18	18	18	6	18	18	18	18	6
		75.0	18	18	12	18	5	18	18	12	18	5	18	18	12	18	5	18	18	12	18	5
		85.0	15	15	8	15	5	15	15	8	15	5	15	15	8	15	5	15	15	8	15	5
		95.0	14	14	6	10	4	14	14	6	10	4	14	14	6	10	4	14	14	6	10	4
		145.0	9	4	3	3	3	9	4	3	3	3	9	4	3	3	3	9	4	3	3	3
		195.0	8	3		3		8	3		3		8	3		3		8	3		3	
	(MIN. 3,000 P.S.I. CONCRETE)	330.0	8	3		3		8	3		3		8	3		3		8	3		3	
	47 1/4"Ø ITW TAPCON W/ 1-3/4" MIN. EMBEDMENT	35.0	18	18	18	18	11	18	18	18	18	11	18	18	18	18	11	18	18	18	18	11
		45.0	18	18	18	18	8	18	18	18	18	8	18	18	18	18	8	18	18	18	18	8
		55.0	18	18	18	18	7	18	18	18	18	7	18	18	18	18	7	18	18	18	18	7
		65.0	18	18	18	18	6	18	18	18	18	6	18	18	18	18	6	18	18	18	18	6
		75.0	18	18	12	18	5	18	18	12	18	5	18	18	12	18	5	18	18	12	18	5
		85.0	16	16	8	16	4	16	16	8	16	4	16	16	8	16	4	16	16	8	16	4
		95.0	14	14	6	10	4	14	14	6	10	4	14	14	6	10	4	14	14	6	10	4
		145.0	9	4	3	4		9	4	3	4		9	4	3	4		9	4	3	4	
		195.0	8	3		3		8	3		3		8	3		3		8	3		3	
	(MIN. 3,000 P.S.I. CONCRETE)	330.0	8	3		3		8	3		3		8	3		3		8	3		3	
	48 1/4"Ø ELCO TAPCON W/ 1-3/4" MIN. EMBEDMENT	35.0	18	18	18	18	12	18	18	18	18	12	18	18	18	18	12	18	18	18	18	12
		45.0	18	18	18	18	9	18	18	18	18	9	18	18	18	18	9	18	18	18	18	9
		55.0	18	18	18	18	8	18	18	18	18	8	18	18	18	18	8	18	18	18	18	8
		65.0	18	18	18	18	6	18	18	18	18	6	18	18	18	18	6	18	18	18	18	6
		75.0	18	18	13	18	5	18	18	13	18	5	18	18	13	18	5	18	18	13	18	5
		85.0	16	16	9	16	5	16	16	9	16	5	16	16	9	16	5	16	16	9	16	5
		95.0	14	14	6	11	4	14	14	6	11	4	14	14	6	11	4	14	14	6	11	4
		145.0	9	4	3	4	3	9	4	3	4	3	9	4	3	4	3	9	4	3	4	3
		195.0	8	3		3		8	3		3		8	3		3		8	3		3	
	(MIN. 3,000 P.S.I. CONCRETE)	330.0	8	3		3		8	3		3		8	3		3		8	3		3	

SEE PAGE 7 FOR ANCHOR NOTES

Approved as complying with the Florida Building Code
Date 10/16/2006
NOA# 06-0920.15
Miami Dade Product Control
Division
By Helmy A. Makar

Thornton-Tomasetti Group
330 N. Andrews Ave., Suite 450 • Ft. Lauderdale, FL 33301
Tel. (954) 522-3690 • Fax (954) 522-3691 • COA # 7519
Website: www.TheTTGroup.com

Copyright © 2006 Thornton-Tomasetti Group, Inc.
CENTERFOLD LICENSED BY CENTERFOLD SHUTTER GROUP, INC.

CENTERFOLD ACCORDION SHUTTER

Tropic Hurricane Shutters Inc.
3804 N.W. 125TH STREET
OPA-LOCKA, FL 33054
TEL: (305) 681-3661
FAX: (305) 681-3663

John W. Knezevich
Professional Engineer
FL License No.: PE 0041961

JUN 28 2006

revisions			
no	date	by	description
1	04/08/04	VJK	COUNTY COMMENTS
2	06/10/04	ZMS	COUNTY COMMENTS
3	08/10/05	JWK	2004 CODE

CSG I.D. #060628054840

date 09/12/2002
scale AS NOTED
drawn by MCR
design by JWK
checked by VJK
drawing no. 06-432

Print Information: P:\FL1\KA\CADD\Associations\Centerfold\TropicHSI\06-432\R3-sub\06-432-08.dwg MCantu 06/28/2006 03:48:32pm 06/28/06 15:45

ANCHOR SCHEDULE

FASTENER MAXIMUM SPACING (INCHES) REQUIRED FOR VARIOUS DESIGN LOADS AND SPANS

Min. 2" Edge Distance

EXIST. STRUC.: **HOLLOW CONCRETE BLOCK**

Each span column is headed "(SEE NOTE 1)". Each connection type row (C1–C5) is headed "CONNECTION TYPE (SEE NOTE 3)". LOAD (W) P.S.F. MAX. (SEE NOTE 1)

ANCHOR TYPE 44

5/16"⌀ ITW TAPCON W/ 1-1/4" MIN. EMBEDMENT

LOAD (W) P.S.F. MAX.	SPANS UP TO 3'-6"					SPANS UP TO 5'-6"					SPANS UP TO 7'-6"					SPANS UP TO 9'-6"					SPANS UP TO 11'-6"					SPANS UP TO 13'-6"					SPANS UP TO 15'-6"					SPANS UP TO 17'-6"				
	C1	C2	C3	C4	C5	C1	C2	C3	C4	C5	C1	C2	C3	C4	C5	C1	C2	C3	C4	C5	C1	C2	C3	C4	C5	C1	C2	C3	C4	C5	C1	C2	C3	C4	C5	C1	C2	C3	C4	C5
35.0	18	18	18	18	11	18	18	18	18	7	14	14	14	14	5	14	14	14	14	5	14	14	14	14	5	14	14	14	14	5	14	14	14	14	5	14	14	14	14	5
45.0	18	18	18	18	9	15	15	15	15	5	11	11	11	11	4	11	11	11	11	4	11	11	11	11	4	11	11	11	11	4	11	11	11	11	4	11	11	11	11	4
55.0	18	18	18	18	7	12	12	12	12	4	9	9	9	9	3	9	9	9	9	3	9	9	9	9	3	9	9	9	9	3	9	9	9	9	3	9	9	9	9	3
65.0	16	16	16	16	6	10	10	10	10	4	7	7	7	7		7	7	7	7		7	7	7	7		7	7	7	7		7	7	7	7		7	7	7	7	
75.0	14	14	14	14	5	9	9	9	9	3	6	6	4	6		6	6	4	6		6	6	4	6		6	6	4	6		6	6	4	6		6	6	4	6	
85.0	12	12	12	12	4	8	8	8	8	3	6	6	3	6		6	6	3	6		6	6	3	6		6	6	3	6		6	6	3	6		6	6	3	6	
95.0	11	11	11	11	4	7	7	6	7		5	5		4		5	5		4		5	5		4		5	5		4		5	5		4		5	5		4	
145.0	7	7	6	7		4	4				3					3					3					3					3					3				
195.0	5	5		4		3					3					3					3					3					3					3				
330.0	3					3					3					3					3					3					3					3				

ANCHOR TYPE 45

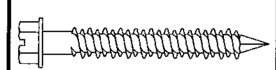

5/16"⌀ ELCO TAPCON W/ 1-1/4" MIN. EMBEDMENT

LOAD (W) P.S.F. MAX.	SPANS UP TO 3'-6"					SPANS UP TO 5'-6"					SPANS UP TO 7'-6"					SPANS UP TO 9'-6"					SPANS UP TO 11'-6"					SPANS UP TO 13'-6"					SPANS UP TO 15'-6"					SPANS UP TO 17'-6"				
	C1	C2	C3	C4	C5	C1	C2	C3	C4	C5	C1	C2	C3	C4	C5	C1	C2	C3	C4	C5	C1	C2	C3	C4	C5	C1	C2	C3	C4	C5	C1	C2	C3	C4	C5	C1	C2	C3	C4	C5
35.0	18	18	18	18	16	18	18	18	18	10	18	18	18	18	7	18	18	18	18	7	18	18	18	18	7	18	18	18	18	7	18	18	18	18	7	18	18	18	18	7
45.0	18	18	18	18	13	18	18	18	18	8	18	18	18	18	6	18	18	18	18	6	18	18	18	18	6	18	18	18	18	6	18	18	18	18	6	18	18	18	18	6
55.0	18	18	18	18	10	18	18	18	18	6	15	15	15	15	5	15	15	15	15	5	15	15	15	15	5	15	15	15	15	5	15	15	15	15	5	15	15	15	15	5
65.0	18	18	18	18	9	18	18	18	18	5	13	13	13	13	4	13	13	13	13	4	13	13	13	13	4	13	13	13	13	4	13	13	13	13	4	13	13	13	13	4
75.0	18	18	18	18	7	15	15	15	15	5	11	11	8	11	3	11	11	8	11	3	11	11	8	11	3	11	11	8	11	3	11	11	8	11	3	11	11	8	11	3
85.0	18	18	18	18	6	13	13	13	13	4	10	10	5	10	3	10	10	5	10	3	10	10	5	10	3	10	10	5	10	3	10	10	5	10	3	10	10	5	10	3
95.0	18	18	18	18	6	12	12	10	12	3	9	9	4	6		9	9	4	6		9	9	4	6		9	9	4	6		9	9	4	6		9	9	4	6	
145.0	12	12	11	12	4	8	8	3	4		6					6					6					6					6					6				
195.0	9	9	4	7	3	6					5					5					5					5					5					5				
330.0	5					5					5					5					5					5					5					5				

ANCHOR TYPE 46

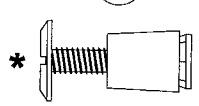

* 1/4"⌀ ALL POINTS SOLID-SET ANCHOR W/ 7/8" EMBEDMENT & 1/4-20 STAINLESS STEEL MACHINE SCREW

LOAD (W) P.S.F. MAX.	SPANS UP TO 3'-6"					SPANS UP TO 5'-6"					SPANS UP TO 7'-6"					SPANS UP TO 9'-6"					SPANS UP TO 11'-6"					SPANS UP TO 13'-6"					SPANS UP TO 15'-6"					SPANS UP TO 17'-6"				
	C1	C2	C3	C4	C5	C1	C2	C3	C4	C5	C1	C2	C3	C4	C5	C1	C2	C3	C4	C5	C1	C2	C3	C4	C5	C1	C2	C3	C4	C5	C1	C2	C3	C4	C5	C1	C2	C3	C4	C5
35.0	18	18	18	18	18	18	18	18	18	12	18	18	18	18	9	18	18	18	18	9	18	18	18	18	9	18	18	18	18	9	18	18	18	18	9	18	18	18	18	9
45.0	18	18	18	18	15	18	18	18	18	10	18	18	18	18	7	18	18	18	18	7	18	18	18	18	7	18	18	18	18	7	18	18	18	18	7	18	18	18	18	7
55.0	18	18	18	18	12	18	18	18	18	8	18	18	18	18	6	18	18	18	18	6	18	18	18	18	6	18	18	18	18	6	18	18	18	18	6	18	18	18	18	6
65.0	18	18	18	18	10	18	18	18	18	6	17	17	17	17	5	17	17	17	17	5	17	17	17	17	5	17	17	17	17	5	17	17	17	17	5	17	17	17	17	5
75.0	18	18	18	18	9	18	18	18	18	6	15	15	10	15	4	15	15	10	15	4	15	15	10	15	4	15	15	10	15	4	15	15	10	15	4	15	15	10	15	4
85.0	18	18	18	18	8	18	18	18	18	5	13	13	7	13	3	13	13	7	13	3	13	13	7	13	3	13	13	7	13	3	13	13	7	13	3	13	13	7	13	3
95.0	18	18	18	18	7	16	16	14	16	4	12	12	5	9	3	12	12	5	9	3	12	12	5	9	3	12	12	5	9	3	12	12	5	9	3	12	12	5	9	3
145.0	17	17	15	17	4	10	10	4	6	3	8	3		3		8	3		3		8	3		3		8	3		3		8	3		3		8	3		3	
195.0	12	12	6	10	3	8	3		3		7					7					7					7					7					7				
330.0	7	3		3		7					7					7					7					7					7					7				

ANCHOR TYPE 47

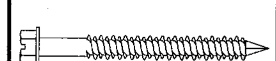

1/4"⌀ ITW TAPCON W/ 1-1/4" MIN. EMBEDMENT

LOAD (W) P.S.F. MAX.	SPANS UP TO 3'-6"					SPANS UP TO 5'-6"					SPANS UP TO 7'-6"					SPANS UP TO 9'-6"					SPANS UP TO 11'-6"					SPANS UP TO 13'-6"					SPANS UP TO 15'-6"					SPANS UP TO 17'-6"				
	C1	C2	C3	C4	C5	C1	C2	C3	C4	C5	C1	C2	C3	C4	C5	C1	C2	C3	C4	C5	C1	C2	C3	C4	C5	C1	C2	C3	C4	C5	C1	C2	C3	C4	C5	C1	C2	C3	C4	C5
35.0	18	18	18	18	10	17	17	17	17	6	12	12	12	12	4	12	12	12	12	4	12	12	12	12	4	12	12	12	12	4	12	12	12	12	4	12	12	12	12	4
45.0	18	18	18	18	7	13	13	13	13	5	10	10	10	10	3	10	10	10	10	3	10	10	10	10	3	10	10	10	10	3	10	10	10	10	3	10	10	10	10	3
55.0	17	17	17	17	6	11	11	11	11	4	8	8	8	8	3	8	8	8	8	3	8	8	8	8	3	8	8	8	8	3	8	8	8	8	3	8	8	8	8	3
65.0	14	14	14	14	5	9	9	9	9	3	6	6	6	6		6	6	6	6		6	6	6	6		6	6	6	6		6	6	6	6		6	6	6	6	
75.0	12	12	12	12	4	8	8	8	8	3	6	6	4	6		6	6	4	6		6	6	4	6		6	6	4	6		6	6	4	6		6	6	4	6	
85.0	11	11	11	11	4	7	7	7	7		5	5		5		5	5		5		5	5		5		5	5		5		5	5		5		5	5		5	
95.0	10	10	10	10	3	6	6	5	6		4	4		3		4	4		3		4	4		3		4	4		3		4	4		3		4	4		3	
145.0	6	6	6	6		4	4				3					3					3					3					3					3				
195.0	4	4		4		3																																		
330.0																																								

ANCHOR TYPE 48

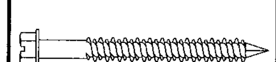

1/4"⌀ ELCO TAPCON W/ 1-1/4" MIN. EMBEDMENT

LOAD (W) P.S.F. MAX.	SPANS UP TO 3'-6"					SPANS UP TO 5'-6"					SPANS UP TO 7'-6"					SPANS UP TO 9'-6"					SPANS UP TO 11'-6"					SPANS UP TO 13'-6"					SPANS UP TO 15'-6"					SPANS UP TO 17'-6"				
	C1	C2	C3	C4	C5	C1	C2	C3	C4	C5	C1	C2	C3	C4	C5	C1	C2	C3	C4	C5	C1	C2	C3	C4	C5	C1	C2	C3	C4	C5	C1	C2	C3	C4	C5	C1	C2	C3	C4	C5
35.0	18	18	18	18	14	18	18	18	18	9	18	18	18	18	6	18	18	18	18	6	18	18	18	18	6	18	18	18	18	6	18	18	18	18	6	18	18	18	18	6
45.0	18	18	18	18	11	18	18	18	18	7	14	14	14	14	5	14	14	14	14	5	14	14	14	14	5	14	14	14	14	5	14	14	14	14	5	14	14	14	14	5
55.0	18	18	18	18	9	15	15	15	15	5	11	11	11	11	4	11	11	11	11	4	11	11	11	11	4	11	11	11	11	4	11	11	11	11	4	11	11	11	11	4
65.0	18	18	18	18	7	13	13	13	13	5	9	9	9	9	3	9	9	9	9	3	9	9	9	9	3	9	9	9	9	3	9	9	9	9	3	9	9	9	9	3
75.0	18	18	18	18	6	11	11	11	11	4	8	8	5	8	3	8	8	5	8	3	8	8	5	8	3	8	8	5	8	3	8	8	5	8	3	8	8	5	8	3
85.0	16	16	16	16	6	10	10	10	10	3	7	7	4	7		7	7	4	7		7	7	4	7		7	7	4	7		7	7	4	7		7	7	4	7	
95.0	14	14	14	14	5	9	9	7	9	3	6	6	3	5		6	6	3	5		6	6	3	5		6	6	3	5		6	6	3	5		6	6	3	5	
145.0	9	9	8	9	3	6	6		3		4					4					4					4					4					4				
195.0	7	7	3	5		4					4					4					4					4					4					4				
330.0	4					4					4					4					4					4					4					4				

SEE PAGE 7 FOR ANCHOR NOTES

Approved as complying with the Florida Building Code
Date 10/16/2006
NOA# 06-0920.15
Miami Dade Product Control Division
By [signature]

Thornton-Tomasetti Group
330 N. Andrews Ave., Suite 450 • Ft. Lauderdale, FL 33301
Tel. (954) 522-3690 • Fax (954) 522-3691 • COA # 7519
Website: www.TheTTGroup.com

Copyright © 2006 Thornton-Tomasetti Group, Inc.
CENTERFOLD LICENSED BY CENTERFOLD SHUTTER GROUP, INC.

CENTERFOLD ACCORDION SHUTTER

Tropic Hurricane Shutters Inc.
3804 N.W. 125TH STREET
OPA-LOCKA, FL 33054
TEL: (305) 681-3661
FAX: (305) 681-3663

John W. Knezevich
Professional Engineer
FL License No.: PE 0041961

JUN 28 2006

revisions			
no	date	by	description
1	04/08/04	VJK	COUNTY COMMENTS
2	06/10/04	ZMS	COUNTY COMMENTS
3	08/10/05	JWK	2004 CODE

CSG I.D. #060628805484D

date 09/12/2002
scale AS NOTED
drawn by MCR
design by JWK
checked by VJK
drawing no. 06-432

Print Information: P:\FL1\KA\CADD\Associations\Centerfold\TropicHSI\06-432\R3-sub\06-432-09.dwg MCantu 06/28/2006 03:48:38pm 06/28/06 15:45

ANCHOR SCHEDULE

FASTENER MAXIMUM SPACING (INCHES) REQUIRED FOR VARIOUS DESIGN LOADS AND SPANS

Min. 3/4" Edge Distance

EXIST. STRUC.: **WOOD**

ANCHOR TYPE: 44

5/16"Ø ITW TAPCON W/ 1-1/2" MIN. EMBEDMENT

LOAD (W) P.S.F. MAX. (SEE NOTE 1)	SPANS UP TO 3'-6" (SEE NOTE 1)					SPANS UP TO 5'-6" (SEE NOTE 1)					SPANS UP TO 7'-6" (SEE NOTE 1)					SPANS UP TO 9'-6" (SEE NOTE 1)					SPANS UP TO 11'-6" (SEE NOTE 1)					SPANS UP TO 13'-6" (SEE NOTE 1)					SPANS UP TO 15'-6" (SEE NOTE 1)					SPANS UP TO 17'-6" (SEE NOTE 1)				
	CONNECTION TYPE (SEE NOTE 3)					CONNECTION TYPE (SEE NOTE 3)					CONNECTION TYPE (SEE NOTE 3)					CONNECTION TYPE (SEE NOTE 3)					CONNECTION TYPE (SEE NOTE 3)					CONNECTION TYPE (SEE NOTE 3)					CONNECTION TYPE (SEE NOTE 3)					CONNECTION TYPE (SEE NOTE 3)				
	C1	C2	C3	C4	C5	C1	C2	C3	C4	C5	C1	C2	C3	C4	C5	C1	C2	C3	C4	C5	C1	C2	C3	C4	C5	C1	C2	C3	C4	C5	C1	C2	C3	C4	C5	C1	C2	C3	C4	C5
35.0	18	18	18	18	15	18	18	18	18	10	18	18	18	18	7	18	18	18	18	7	18	18	18	18	7	18	18	18	18	7	18	18	18	18	7	18	18	18	18	7
45.0	18	18	18	18	12	18	18	18	18	7	18	18	18	18	5	18	18	18	18	5	18	18	18	18	5	18	18	18	18	5	18	18	18	18	5	18	18	18	18	5
55.0	18	18	18	18	10	18	18	18	18	6	17	17	17	17	4	17	17	17	17	4	17	17	17	17	4	17	17	17	17	4	17	17	17	17	4	17	17	17	17	4
65.0	18	18	18	18	8	18	18	18	18	5	15	15	15	15	3	15	15	15	15	3	15	15	15	15	3	15	15	15	15	3	15	15	15	15	3	15	15	15	15	3
75.0	18	18	18	18	7	17	17	17	17	4	13	13	9	13	3	13	13	9	13	3	13	13	9	13	3	13	13	9	13	3	13	13	9	13	3	13	13	9	13	3
85.0	18	18	18	18	6	15	15	15	15	4	11	11	6	11	3	11	11	6	11	3	11	11	6	11	3	11	11	6	11	3	11	11	6	11	3	11	11	6	11	3
95.0	18	18	18	18	5	14	14	11	14	3	10	10	4	7		10	10	4	7		10	10	4	7		10	10	4	7		10	10	4	7		10	10	4	7	
145.0	14	14	13	14	3	9	9	3	5		6	3				6	3				6	3				6	3				6	3				6	3			
195.0	10	10	5	8		6	3				6					6					6					6					6					6				
330.0	6					6					6					6					6					6					6					6				

ANCHOR TYPE: 47

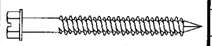

1/4"Ø ITW TAPCON W/ 1-1/2" MIN. EMBEDMENT

LOAD (W) P.S.F. MAX. (SEE NOTE 1)	SPANS UP TO 3'-6" (SEE NOTE 1)					SPANS UP TO 5'-6" (SEE NOTE 1)					SPANS UP TO 7'-6" (SEE NOTE 1)					SPANS UP TO 9'-6" (SEE NOTE 1)					SPANS UP TO 11'-6" (SEE NOTE 1)					SPANS UP TO 13'-6" (SEE NOTE 1)					SPANS UP TO 15'-6" (SEE NOTE 1)					SPANS UP TO 17'-6" (SEE NOTE 1)				
	CONNECTION TYPE (SEE NOTE 3)					CONNECTION TYPE (SEE NOTE 3)					CONNECTION TYPE (SEE NOTE 3)					CONNECTION TYPE (SEE NOTE 3)					CONNECTION TYPE (SEE NOTE 3)					CONNECTION TYPE (SEE NOTE 3)					CONNECTION TYPE (SEE NOTE 3)					CONNECTION TYPE (SEE NOTE 3)				
	C1	C2	C3	C4	C5	C1	C2	C3	C4	C5	C1	C2	C3	C4	C5	C1	C2	C3	C4	C5	C1	C2	C3	C4	C5	C1	C2	C3	C4	C5	C1	C2	C3	C4	C5	C1	C2	C3	C4	C5
35.0	18	18	18	18	12	18	18	18	18	7	18	18	18	18	5	18	18	18	18	5	18	18	18	18	5	18	18	18	18	5	18	18	18	18	5	18	18	18	18	5
45.0	18	18	18	18	9	18	18	18	18	6	16	16	16	16	4	16	16	16	16	4	16	16	16	16	4	16	16	16	16	4	16	16	16	16	4	16	16	16	16	4
55.0	18	18	18	18	7	18	18	18	18	5	13	13	13	13	3	13	13	13	13	3	13	13	13	13	3	13	13	13	13	3	13	13	13	13	3	13	13	13	13	3
65.0	18	18	18	18	6	15	15	15	15	4	11	11	11	11	3	11	11	11	11	3	11	11	11	11	3	11	11	11	11	3	11	11	11	11	3	11	11	11	11	3
75.0	18	18	18	18	5	13	13	13	13	3	9	9	6	9		9	9	6	9		9	9	6	9		9	9	6	9		9	9	6	9		9	9	6	9	
85.0	18	18	18	18	5	11	11	11	11	3	8	8	4	8		8	8	4	8		8	8	4	8		8	8	4	8		8	8	4	8		8	8	4	8	
95.0	16	16	16	16	4	10	10	8	10		7	7	3	5		7	7	3	5		7	7	3	5		7	7	3	5		7	7	3	5		7	7	3	5	
145.0	10	10	10	10	3	6	6		4		5					5					5					5					5					5				
195.0	8	8	4	6		5					4					4					4					4					4					4				
330.0	4					4					4					4					4					4					4					4				

SEE PAGE 7 FOR ANCHOR NOTES

Approved as complying with the Florida Building Code
Date 10/16/2006
NOA# 06-0920.15
Miami Dade Product Control Division
By Helmy A. Mahfouz

Thornton-Tomasetti Group
330 N. Andrews Ave., Suite 450 • Ft. Lauderdale, FL 33301
Tel. (954) 522-3690 • Fax (954) 522-3691 • COA # 7519
Website: www.TheTTGroup.com

Copyright © 2006 Thornton-Tomasetti Group, Inc.
CENTERFOLD LICENSED BY CENTERFOLD SHUTTER GROUP, INC.

CENTERFOLD ACCORDION SHUTTER

Tropic Hurricane Shutters Inc.
3804 N.W. 125TH STREET
OPA-LOCKA, FL 33054
TEL: (305) 681-3661
FAX: (305) 681-3663

John W. Knezevich
Professional Engineer
FL License No.: PE 0041961

JUN 28 2006

revisions

no	date	by	description
1	04/08/04	VJK	COUNTY COMMENTS
2	06/10/04	ZMS	COUNTY COMMENTS
3	08/10/05	JWK	2004 CODE

CSG I.D. #0606280548 4D

date 09/12/2002
scale AS NOTED
drawn by MCR
design by JWK
checked by VJK
drawing no. 06-432
sheet 10 of 10

Print Information: P:\FL1\KA\CADD\Associations\Centerfold\TropicHSI\06-432\R3-sub\06-432-10.dwg MCantu 06/28/2006 03:48:40pm 06/28/06 15:45