MIAMI-DADE COUNTY
BUILDING CODE COMPLIANCE OFFICE (BCCO)
PRODUCT CONTROL DIVISION

MIAMI-DADE COUNTY, FLORIDA
METRO-DADE FLAGLER BUILDING

140 WEST FLAGLER STREET, SUITE 1603
MIAMI, FLORIDA 33130-1563
(305) 375-2901 FAX (305) 375-2908
www.miamidade.gov

NOTICE OF ACCEPTANCE (NOA)

F & L Aluminum Parts, Inc.
1710 N. W. 22nd Court, Unit #7
Pompano Beach, Florida 33069

SCOPE:

This NOA is being issued under the applicable rules and regulations governing the use of construction materials. The documentation submitted has been reviewed by Miami-Dade County Product Control Division and accepted by the Board of Rules and Appeals (BORA) to be used in Miami Dade County and other areas where allowed by the Authority Having Jurisdiction (AHJ).

This NOA shall not be valid after the expiration date stated below. The Miami-Dade County Product Control Division (In Miami Dade County) and/or the AHJ (in areas other than Miami Dade County) reserve the right to have this product or material tested for quality assurance purposes. If this product or material fails to perform in the accepted manner, the manufacturer will incur the expense of such testing and the AHJ may immediately revoke, modify, or suspend the use of such product or material within their jurisdiction. BORA reserves the right to revoke this acceptance, if it is determined by Miami-Dade County Product Control Division that this product or material fails to meet the requirements of the applicable building code.

This product is approved as described herein, and has been designed to comply with the High Velocity Hurricane Zone of the Florida Building Code.

DESCRIPTION: Aluminum Roof Mounted Stand Frame Support for Air Conditioning Units

APPROVAL DOCUMENT: Drawing No. 06-501, titled " Air Conditioning Stands ", sheets 1 through 3 of 3, prepared by Thornton Tomasetti, dated September 13, 2006, signed and sealed by John W. Knezevich, P.E., bearing the Miami-Dade County Product Control Approval stamp with the Notice of Acceptance number and approval date by the Miami-Dade County Product Control Division.

MISSILE IMPACT RATING: None

LABELING: Each stand frame shall bear a permanent label with the manufacturer's name or logo, city, state and the following statement: "Miami-Dade County Product Control Approved", unless otherwise noted herein.

RENEWAL of this NOA shall be considered after a renewal application has been filed and there has been no change in the applicable building code negatively affecting the performance of this product.

TERMINATION of this NOA will occur after the expiration date or if there has been a revision or change in the materials, use, and/or manufacture of the product or process. Misuse of this NOA as an endorsement of any product, for sales, advertising or any other purposes shall automatically terminate this NOA. Failure to comply with any section of this NOA shall be cause for termination and removal of NOA.

ADVERTISEMENT: The NOA number preceded by the words Miami-Dade County, Florida, and followed by the expiration date may be displayed in advertising literature. If any portion of the NOA is displayed, then it shall be done in its entirety.

INSPECTION: A copy of this entire NOA shall be provided to the user by the manufacturer or its distributors and shall be available for inspection at the job site at the request of the Building Official.

This NOA consists of this page 1, evidence submitted page E-1 as well as approval document mentioned above. The submitted documentation was reviewed by **Helmy A. Makar, P.E., M.S.**

Helmy A. Makar
12/28/2006

NOA No 06-0922.03
Expiration Date: 12/28/2011
Approval Date: 12/28/2006

F & L Aluminum Parts, Inc.

NOTICE OF ACCEPTANCE: EVIDENCE SUBMITTED

A. DRAWINGS

1. *Drawing No. 06-501, titled " Air Conditioning Stands ", sheets 1 through 3 of 3, prepared by Thornton Tomasetti, dated September 13, 2006, signed and sealed by John W. Knezevich, P.E.*

B. TESTS

1. *None.*

C. CALCULATIONS

1. *Calculation titled " Air Conditioning Stands Calculations ", dated September 15, 2006, sheets 1 through 160 of 160, signed and sealed by J. W. Knezevich, P.E.*

D. QUALITY ASSURANCE

1. *By Miami-Dade County Building Code Compliance Office.*

E. MATERIAL CERTIFICATIONS

1. *None.*

Helmy A. Makar, P. E., M.S.
Product Control Examiner
NOA No 06-0922.03
Expiration Date: 12/28/2011
Approval Date: 12/28/2006

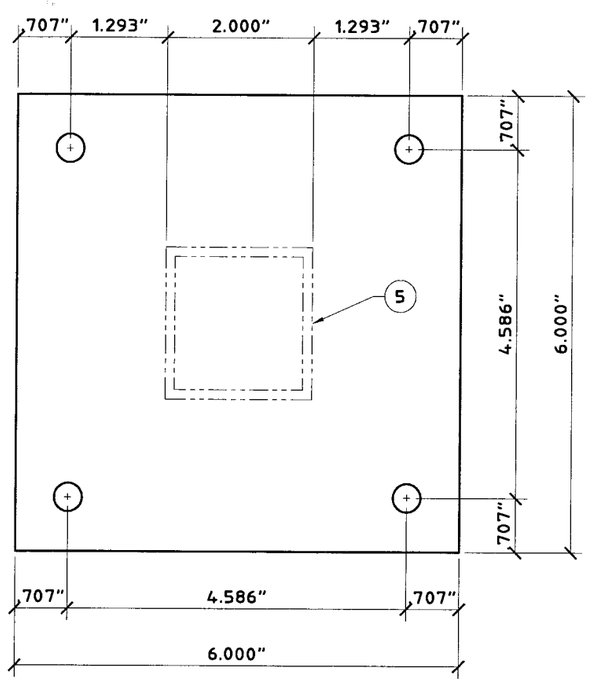

(6061-T6 ALUM. ALOY)
1 2" COLUMN BASE PLATE
SCALE: HALF SIZE

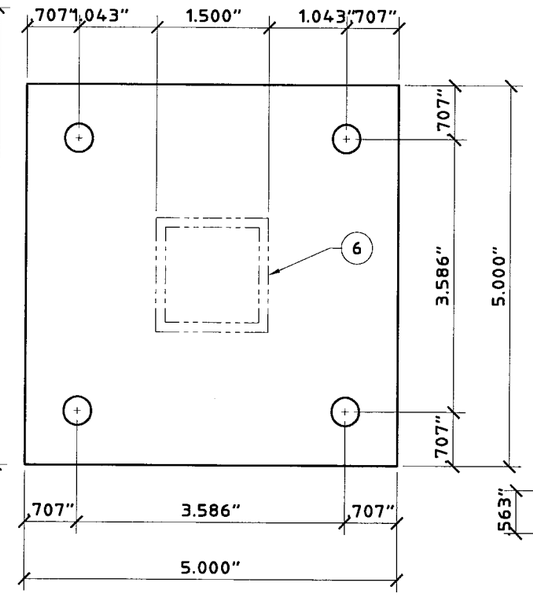

(6061-T6 ALUM. ALOY)
2 1-1/2" COLUMN BASE PLATE
SCALE: HALF SIZE

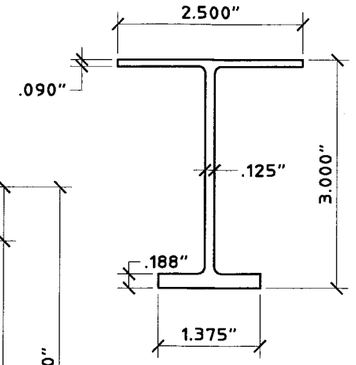

(6061-T6 ALUM. ALOY)
3 RAIL (I-BEAM)
SCALE: HALF SIZE

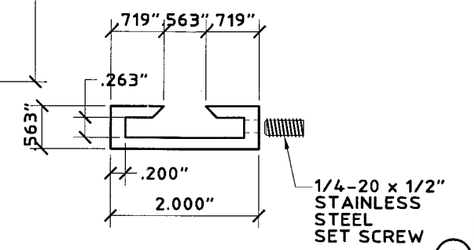

(6061-T6 ALUM. ALOY)
4 RAIL BASE
SCALE: HALF SIZE

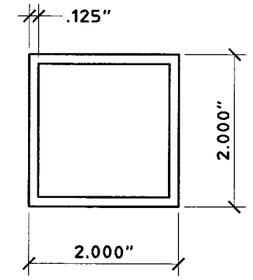

(6061-T6 ALUM. ALOY)
5 2" COLUMN
SCALE: HALF SIZE

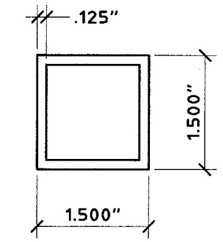

(6061-T6 ALUM. ALOY)
6 1-1/2" COLUMN
SCALE: HALF SIZE

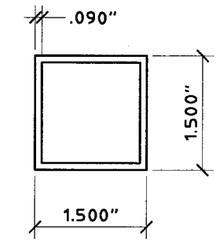

(6061-T6 ALUM. ALOY)
7 BEAM TUBE
SCALE: HALF SIZE

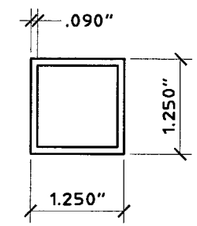

(6061-T6 ALUM. ALOY)
8 BEAM TUBE
SCALE: HALF SIZE

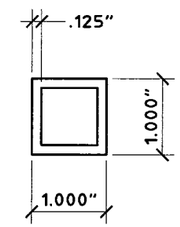

(6061-T6 ALUM. ALOY)
9 BEAM TUBE
SCALE: HALF SIZE

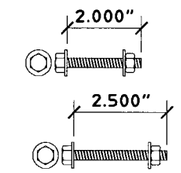

1/4-20 STAINLESS
STEEL THRU-BOLT
WITH NUT
10 SCALE: HALF SIZE

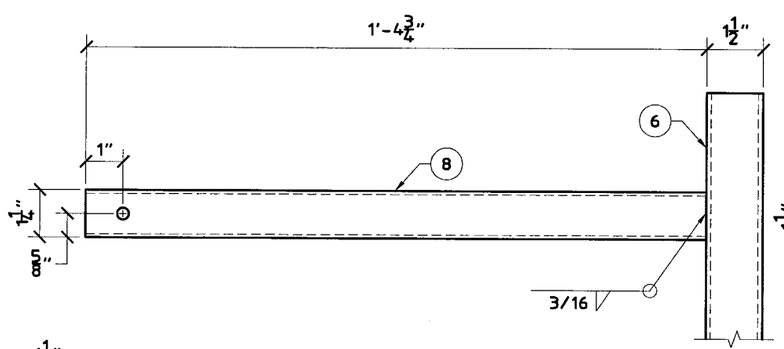

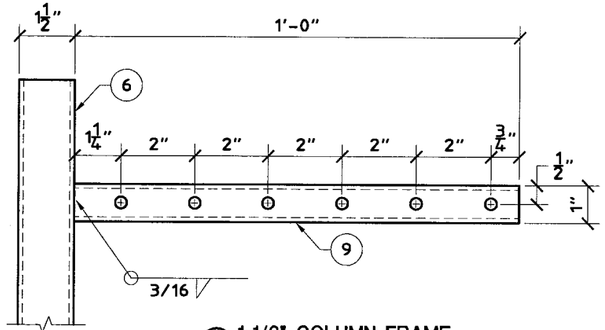

A 1-1/2" COLUMN FRAME
SCALE: 3" = 1'-0"

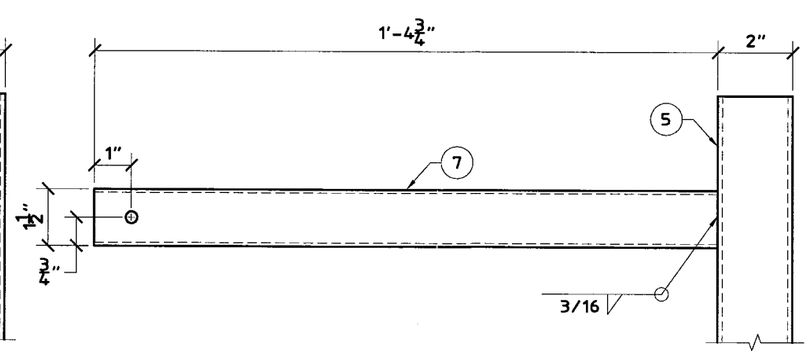

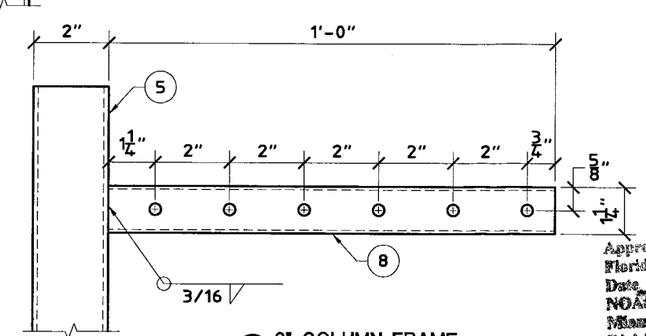

B 2" COLUMN FRAME
SCALE: 3" = 1'-0"

Approved as complying with the
Florida Building Code
Date 12/28/2006
NOA# 06-0922.03
Miami Dade Product Control
Division
By Helena A. Melo

GENERAL NOTES:

1. THESE A/C STANDS ARE DESIGNED IN ACCORDANCE WITH HIGH VELOCITY HURRICANE ZONE PROVISIONS OF THE FLORIDA BUILDING CODE 2004, WITH 2005 REVISIONS.
2. A 33% INCREASE IN ALLOWABLE STRESS HAS NOT BEEN USED IN THE DESIGN OF THIS PRODUCT. HOWEVER, FOR WOOD ANCHORS, A LOAD DURATION FACTOR OF 1.6 HAS BEEN USED.
3. WIND LOADS SHALL BE DETERMINED BY AN ARCHITECT OR PROFESSIONAL ENGINEER IN ACCORDANCE WITH THE GOVERNING CODE AND GOVERNING WIND VELOCITY. FOR WIND LOAD CALCULATIONS USING ASCE7-02, USE TABLE 6-10 WITH A DIRECTIONALITY FACTOR OF 0.90 AND Cf FACTOR OF 1.32.
4. THE SYSTEM IS DESIGNED FOR A MAXIMUM WIND LOAD OF 68 PSF.
5. THE MAXIMUM SIZE OF A/C UNIT IS SHOWN IN THE A/C STAND SCHEDULE. MAXIMUM WEIGHT OF A/C UNIT IS 300 LBS.
6. STANDS SHALL BE INSTALLED WITH A MINIMUM CLEAR HEIGHT IN ACCORDANCE WITH F.B.C. CHAPTER 15, SECTION 1522 AND TABLE 1522.3.
7. ALUMINUM DESIGN IS IN ACCORDANCE WITH THE F.B.C. CHAPTER 20 AND THE ALUMINUM ASSOCIATION SPECIFICATIONS FOR ALUMINUM STRUCTURES.
8. ALUMINUM ALLOYS SHALL BE AS NOTED ON DRAWINGS. ALL WELDING SHALL BE PERFORMED WITH 5183 FILLER ALLOY, U.O.N..
9. A/C CONTRACTOR SHALL PROVIDE VIBRATION ISOLATOR PADS BETWEEN A/C UNIT AND STAND.
10. A FLORIDA REGISTERED ENGINEER SHALL VERIFY CAPACITY OF EXISTING STRUCTURE TO SUPPORT A/C STAND LOADS SHOWN IN FRAME SCHEDULE.
11. WHERE ALTERNATE CONNECTIONS OF A/C UNIT TO FRAME ARE REQUIRED, CONNECTIONS SHALL BE DESIGNED FOR THE ACTUAL WIND LOADS WITH CONSIDERATION OF UPLIFT, OVERTURNING & SLIDING. CONNECTIONS TO RAIL SHALL NOT INDUCE TORSIONAL FORCES.
12. CONTRACTOR SHALL VERIFY CONNECTION OF AC UNIT TO FRAME DOES NOT VOID MANUFACTURER'S WARRANTY.

Thornton Tomasetti
330 N. Andrews Ave., Suite 450 • Ft. Lauderdale, FL 33301
T 954.522.3690 • F 954.522.3691 • COA # 7519
Website: www.ThorntonTomasetti.com

Copyright © 2006 Thornton-Tomasetti, Inc.

AIR CONDITIONING STANDS

F & L ALUMINUM PARTS, INC.
1710 N.W. 22nd Court, Unit 7
Pompano Beach, FL 33069
Tel: (954) 975-8535 • Fax: (954) 975-8715

J.W. Knezevich
Professional Engineer
FL License No.: PE 0041961

SEP 13 2006

revisions

no	date	by	description

date 09/13/2006
scale AS NOTED
drawn by MCR
design by JWK
checked by VJK
drawing no. 06-501
sheet 1 of 3

Print Information: P:\FL1\Projects\KK6501.00\Drawings\R0-sub\06-501-01.dwg MCantu 09/15/2006 03:29:37pm 09/15/06 15:21

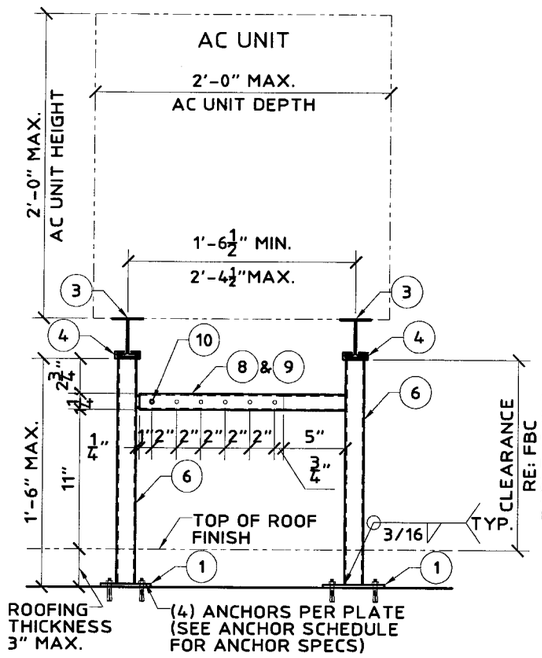

(C) ASSEMBLY ELEVATION (END VIEW) 1
SCALE: 12" = 1'-0"

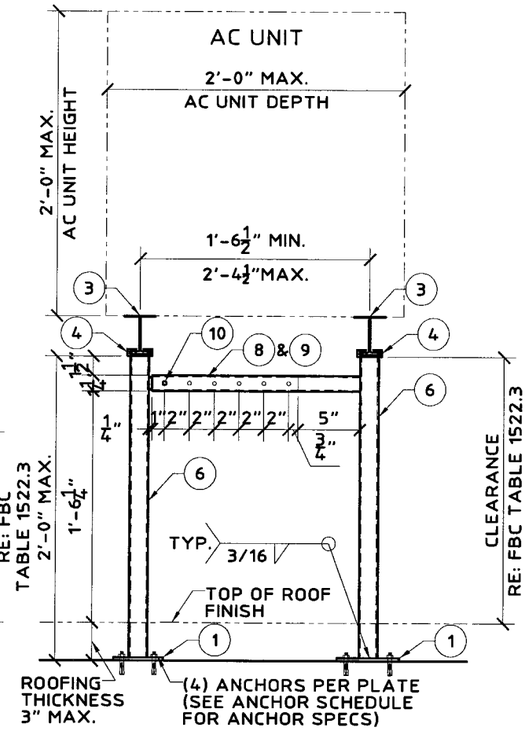

(D) ASSEMBLY ELEVATION (END VIEW) 2
SCALE: 12" = 1'-0"

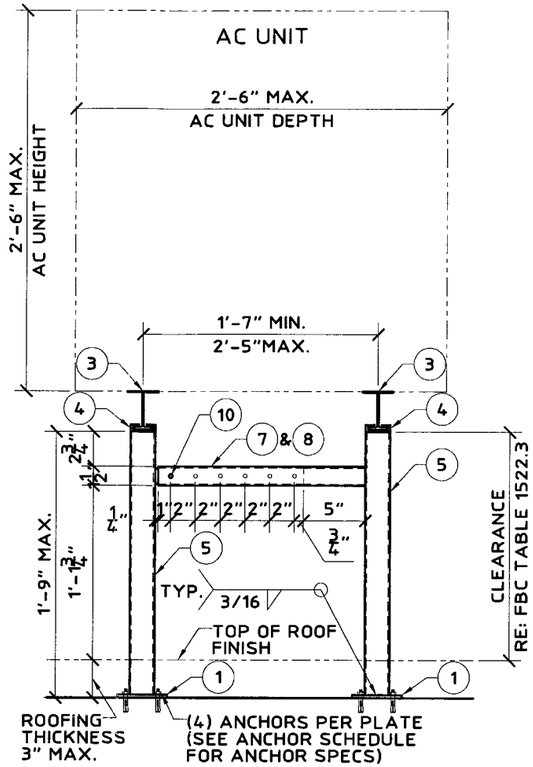

(E) ASSEMBLY ELEVATION (END VIEW) 3
SCALE: 12" = 1'-0"

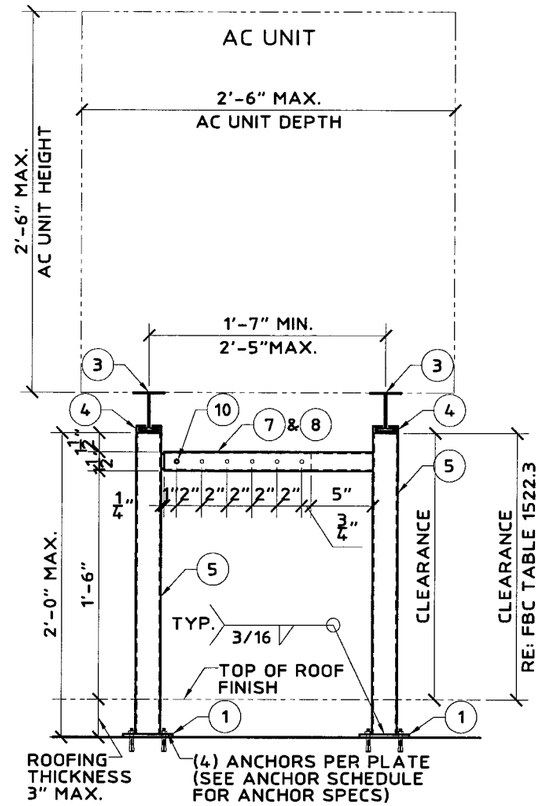

(F) ASSEMBLY ELEVATION (END VIEW) 4
SCALE: 12" = 1'-0"

ANCHOR SCHEDULE

EXISTING STRUCTURE	ANCHOR TYPE
CONCRETE	(4) 1/4"Φ HILTI KWIK BOLT 3 WITH 3" EMBEDMENT AND 3-1/2" MIN. EDGE DISTANCE (3,000 PSI CONCRETE)
STEEL	(4) HILTI 1/4-20 KWIK-FLEX SELF DRILLING SELF-TAPPING SCREWS. MINIMUM STEEL THICKNESS = 1/8".
WOOD	3/8"Φ STAINLESS STEEL LAG SCREWS WITH 2-1/2" MIN. EMBEDMENT IN WOOD FRAMING BEYOND PLYWOOD AND 1" MIN. EDGE DISTANCE

NOTE:
33% INCREASE IN ALLOWABLE LOADS HAVE NOT BEEN USED IN THE DESIGN OF THE ANCHORS FOR THIS PRODUCT APPROVAL, HOWEVER, WOOD ANCHORS WITH 1.60 INCREASE FOR WIND LOAD DURATION HAVE BEEN USED.

MAXIMUM SUPPORT REACTIONS (UNFACTORED LOADS)

	COLUMN FRAME		T (#)	C (#)	V (#)	M (FT-#)
	COLUMN TUBE	h (IN)				
ROOF ELEV. 85 FT	2"x2"x1/8"	24	540	840	213	328
	2"x2"x1/8"	21	508	808	213	293
	1-1/2"x1-1/2"x1/8"	24	365	665	136	195
Fw = 68 PSF	1-1/2"x1-1/2"x1/8"	21	343	643	136	175
	1-1/2"x1-1/2"x1/8"	18	322	622	136	154
ROOF ELEV. 45 FT	2"x2"x1/8"	24	459	759	188	289
	2"x2"x1/8"	21	431	731	188	258
	1-1/2"x1-1/2"x1/8"	24	304	604	120	172
Fw = 60 PSF	1-1/2"x1-1/2"x1/8"	21	285	585	120	154
	1-1/2"x1-1/2"x1/8"	18	267	567	120	136

Fw = DESIGN WIND PRESSURE

Approved as complying with the Florida Building Code
Date 12/28/2006
NOA# 06-0922.03
Miami Dade Product Control Division
By Helmy A. Mekhail

Thornton Tomasetti
330 N. Andrews Ave., Suite 450 • Ft. Lauderdale, FL 33301
T 954.522.3690 • F 954.522.3691 • COA # 7519
Website: www.ThorntonTomasetti.com

Copyright © 2006 Thornton-Tomasetti, Inc.

AIR CONDITIONING STANDS

F & L ALUMINUM PARTS, INC.
1710 N.W. 22nd Court, Unit 7
Pompano Beach, FL 33069
Tel: (954) 975-8535 • Fax: (954) 975-8715

J.W. Knezevich
Professional Engineer
FL License No.: PE 0041961

SEP 13 2006

revisions

no	date	by	description

date 09/13/2006
scale AS NOTED
drawn by MCR
design by JWK
checked by VJK
drawing no. 06-501
sheet 2 of 3

Print Information: P:\FL1\Projects\KK6501.00\Drawings\R0-sub\06-501-02.dwg MCantu 09/15/2006 03:29:42pm 09/15/06 15:21

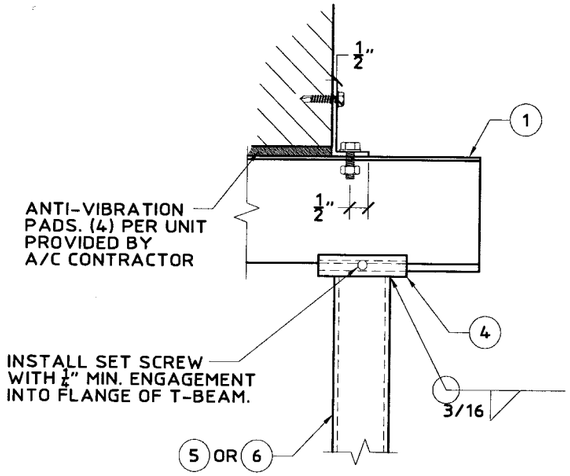

G AC UNIT TO I-BEAM CONNECTION
SCALE: 3" = 1'-0"

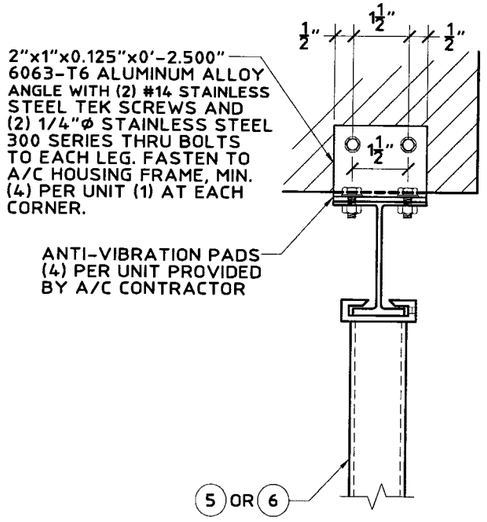

H AC UNIT TO I-BEAM CONNECTION
SCALE: 3" = 1'-0"

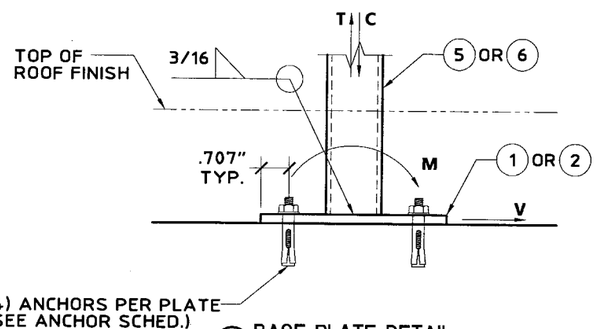

J BASE PLATE DETAIL
SCALE: 3" = 1'-0"

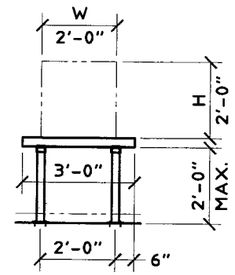

K 1-1/2" COLUMN - ONE UNIT SYSTEM
SCALE: 1/4" = 1'-0"

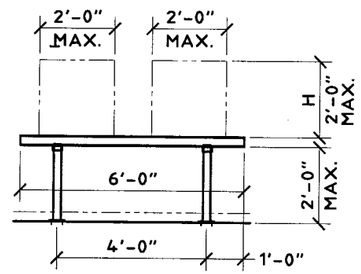

L 1-1/2" COLUMN - TWO UNIT SYSTEM
SCALE: 1/4" = 1'-0"

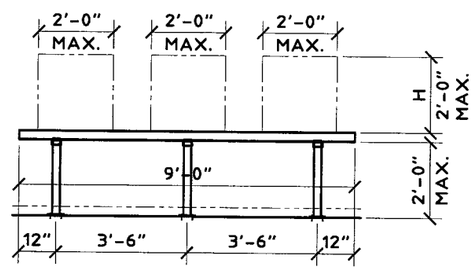

M 1-1/2" COLUMN - THREE UNIT SYSTEM
SCALE: 1/4" = 1'-0"

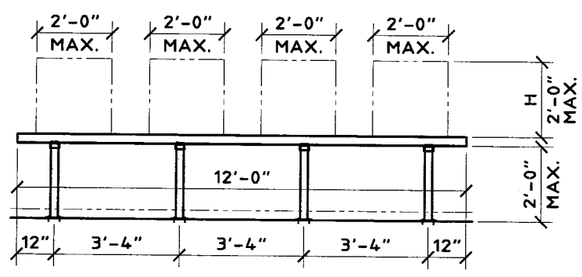

N 1-1/2" COLUMN - FOUR UNIT SYSTEM
SCALE: 1/4" = 1'-0"

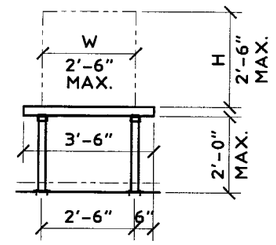

P 2" COLUMN - ONE UNIT SYSTEM
SCALE: 1/4" = 1'-0"

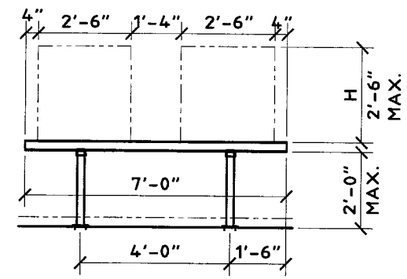

Q 2" COLUMN - TWO UNIT SYSTEM
SCALE: 1/4" = 1'-0"

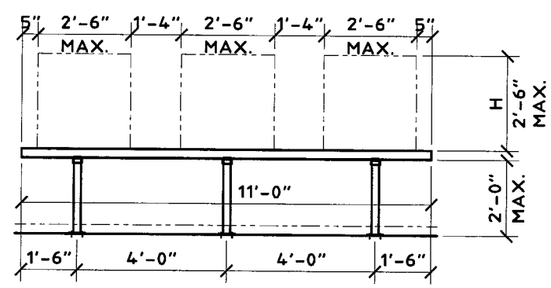

R 2" COLUMN - THREE UNIT SYSTEM
SCALE: 1/4" = 1'-0"

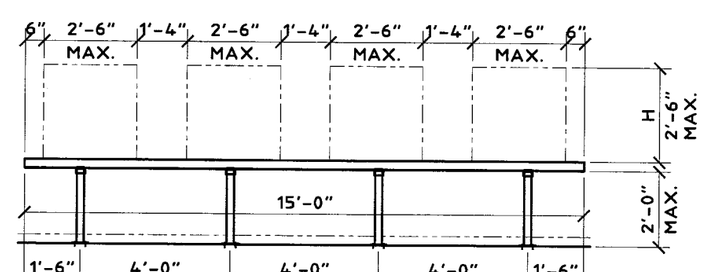

S 2" COLUMN - FOUR UNIT SYSTEM
SCALE: 1/4" = 1'-0"

STAND ASSEMBLY NOTES:

1. FOR ASSEMBLIES K, L, M & N, A/C UNITS SHALL HAVE A MIXIMUM PROJECTED AREA OF 4.0 FT (24"x 24") EACH.
2. FOR ASSEMBLIES P, Q, R & S, A/C UNITS SHALL HAVE A MAXIMUM PROJECTED AREA OF 6.25 FT (30"x30") EACH.
3. UNITS SHALL BE EQUALLY SPACED AS SHOWN ±2".
4. PROVIDE 3" MIN. ±2" FROM END OF BEAM TO EDGE OF UNIT, UNLESS OTHERWISE NOTED.

Approved as complying with the Florida Building Code
Date 12/28/2006
NOA# 06-0922.03
Miami-Dade Product Control Division
By Helena A. Molina

Thornton Tomasetti
330 N. Andrews Ave., Suite 450 • Ft. Lauderdale, FL 33301
T 954.522.3690 • F 954.522.3691 • COA # 7519
Website: www.ThorntonTomasetti.com

Copyright © 2006 Thornton-Tomasetti, Inc.

AIR CONDITIONING STANDS

F & L ALUMINUM PARTS, INC.
1710 N.W. 22nd Court, Unit 7
Pompano Beach, FL 33069
Tel: (954) 975-8535 • Fax: (954) 975-8715

J.W. Knezevich
Professional Engineer
FL License No.: PE 0041961

SEP 13 2006

revisions			
no	date	by	description

date	09/13/2006
scale	AS NOTED
drawn by	MCR
design by	JWK
checked by	VJK
drawing no.	06-501
sheet	3 of 3

Print Information: P:\FL1\Projects\KK6501.00\Drawings\R0-sub\06-501-03.dwg MCantu 09/15/2006 03:29:47pm 09/15/06 15:22