MIAMI-DADE COUNTY

BUILDING CODE COMPLIANCE OFFICE (BCCO)
PRODUCT CONTROL DIVISION

MIAMI-DADE COUNTY, FLORIDA
METRO-DADE FLAGLER BUILDING
140 WEST FLAGLER STREET, SUITE 1603
MIAMI, FLORIDA 33130-1563
(305) 375-2901 FAX (305) 375-2908

NOTICE OF ACCEPTANCE (NOA)

Glasswall, LLC.
3945 NW 32 Avenue
Miami, FL 33142

SCOPE:

This NOA is being issued under the applicable rules and regulations governing the use of construction materials. The documentation submitted has been reviewed by Miami-Dade County Product Control Division and accepted by the Board of Rules and Appeals (BORA) to be used in Miami Dade County and other areas where allowed by the Authority Having Jurisdiction (AHJ).

This NOA shall not be valid after the expiration date stated below. The Miami-Dade County Product Control Division (In Miami Dade County) and/or the AHJ (in areas other than Miami Dade County) reserve the right to have this product or material tested for quality assurance purposes. If this product or material fails to perform in the accepted manner, the manufacturer will incur the expense of such testing and the AHJ may immediately revoke, modify, or suspend the use of such product or material within their jurisdiction. BORA reserves the right to revoke this acceptance, if it is determined by Miami-Dade County Product Control Division that this product or material fails to meet the requirements of the applicable building code.

This product is approved as described herein, and has been designed to comply with the Florida Building Code, including the High Velocity Hurricane Zone.

DESCRIPTION: Series 101 Aluminum Window Wall System – Large Missile Impact

APPROVAL DOCUMENT: Drawing No. **02-0164**, titled "Series # 101 Fixed Window – Large Missile", sheets 1 through 5 of 5, dated 12/4/04, with revision #6 dated 11/21/06, prepared by manufacturer, signed and sealed by Kelvyn A. Whitfield, P.E., dated 04/18/07, bearing the Miami-Dade County Product Control Revision stamp with the Notice of Acceptance number and expiration date by the Miami-Dade County Product Control Division.

MISSILE IMPACT RATING: Large and Small Missile Impact

LABELING: Each unit shall bear a permanent label with the manufacturer's name or logo, city, state and following statement: "Miami-Dade County Product Control Approved", unless otherwise noted herein.

RENEWAL of this NOA shall be considered after a renewal application has been filed and there has been no change in the applicable building code negatively affecting the performance of this product.

TERMINATION of this NOA will occur after the expiration date or if there has been a revision or change in the materials, use, and/or manufacture of the product or process. Misuse of this NOA as an endorsement of any product, for sales, advertising or any other purposes shall automatically terminate this NOA. Failure to comply with any section of this NOA shall be cause for termination and removal of NOA.

ADVERTISEMENT: The NOA number preceded by the words Miami-Dade County, Florida, and followed by the expiration date may be displayed in advertising literature. If any portion of the NOA is displayed, then it shall be done in its entirety.

INSPECTION: A copy of this entire NOA shall be provided to the user by the manufacturer or its distributors and shall be available for inspection at the job site at the request of the Building Official.

This NOA **renews and revises NOA # 04-1208.04** and consists of this page 1 and evidence pages E-1 and E-2, as well as approval document mentioned above.

The submitted documentation was reviewed by **Jaime D. Gascon, P.E.**

PRODUCT CONTROL ACCEPTED

J. Gascon 4/24/07

NOA No 06-1002.08
Expiration Date: September 27, 2011
Approval Date: May 17, 2007

Glasswall, LLC.

NOTICE OF ACCEPTANCE: EVIDENCE SUBMITTED

A. DRAWINGS

1. Manufacturer's die drawings and sections.
2. Drawing No. **02-0164**, titled "Series # 101 Fixed Window - Large Missile", sheets 1 through 5 of 5, dated 12/4/04, with revision # 6 dated 11/21/06, prepared by manufacturer, dated 04/18/07, signed and sealed by Kelvyn A. Whitfield, P.E.

B. TESTS

1. Test reports on 1) Uniform Static Air Pressure Test, Loading per SFBC PA 202-94
   2) Large Missile Impact Test per SFBC, PA 201-94
   3) Cyclic Wind Pressure Loading per SFBC, PA 203-94

   along with marked-up drawings and installation diagram of a series 101 aluminum window wall system, prepared by Fenestration Testing Laboratory, Inc., Test Report No. **FTL-4034**, dated 01/13/04, signed and sealed by Edmundo Largaespada, P.E.
   "Submitted under previous approval 04-1208.04"
2. Test reports on 1) Air Infiltration Test, per SFBC, PA 202-94
   2) Uniform Static Air Pressure Test, Loading per SFBC PA 202-94
   3) Water Resistance Test, per SFBC, PA 202-94
   4) Large Missile Impact Test per SFBC, PA 201-94
   5) Cyclic Wind Pressure Loading per SFBC, PA 203-94

   along with marked-up drawings and installation diagram of 1 specimen of a series 101 aluminum window wall system, prepared by Fenestration Testing Laboratory, Inc., Test Report No. **FTL-3348**, dated February 5, 2002, signed and sealed by Luis A. Figueredo, P.E.
   "Submitted under previous approval 04-1208.04"
3. Test reports on 1) Air Infiltration Test, per SFBC, PA 202-94
   2) Uniform Static Air Pressure Test, Loading per SFBC PA 202-94
   3) Water Resistance Test, per SFBC, PA 202-94
   4) Small Missile Impact Test per SFBC, PA 201-94
   5) Cyclic Wind Pressure Loading per SFBC, PA 203-94

   along with marked-up drawings and installation diagram of a series 101 aluminum window wall system, prepared by Fenestration Testing Laboratory, Inc., Test Report No. **FTL-3349**, dated February 7, 2002, signed and sealed by Luis A. Figueredo, P.E.
   "Submitted under previous approval 04-1208.04"

Jaime D. Gascon, P.E.
Chief, Product Control Division
NOA No 06-1002.08
Expiration Date: September 27, 2011
Approval Date: May 17, 2007

NOTICE OF ACCEPTANCE: EVIDENCE SUBMITTED

4. Test reports on 1) Air Infiltration Test, per SFBC, PA 202-94
   2) Uniform Structural load Test, Loading per SFBC, PA 202-94
   3) Water Resistance Test, per SFBC, PA 202-94
   4) Large Missile Impact Test per SFBC, PA 201-94
   5) Small Missile Impact Test per SFBC, PA 201-94
   6) Cyclic Wind Pressure Loading per SFBC, PA 203-94

   Along with marked-up drawings and installation diagram of an aluminum window wall system, prepared by Construction Testing Corporation, Test Report No. **01-002**, dated March 19, 2001, signed and sealed by Yamil G. Kuri, P.E., and additional information describing tests sequence, provided by Construction Testing Corporation and dated 1/17/01.
   "Submitted under previous approval 04-1208.04"

C. CALCULATIONS

1. Anchor Calculations and structural analysis, dated 09/04/06, prepared by Kelvyn A. Whitfield, Mechanical Engineer, signed and sealed by Kelvyn A. Whitfield, P.E.
   "Submitted under previous approval 04-1208.04"
2. Anchor Calculations and structural analysis, prepared by Kelvyn A. Whitfield, Mechanical Engineer, file # F26-155, dated 11/21/06, signed and sealed by Kelvyn A. Whitfield, P.E.

D. QUALITY ASSURANCE

1. Miami Dade Building Code Compliance Office (BCCO).

E. MATERIAL CERTIFICATIONS

1. Notice of Acceptance No. **06-1205.10** issued to E.I. DuPont DeNemours for their "Sentry Glass ® Plus" dated 02/15/07, expiring on 01/14/08.

F. STATEMENTS

1. Statement letter of conformance, dated 12/04/04, signed and sealed by Kelvyn A. Whitfield, P.E.
2. Statement letter of no financial interest, dated 12/04/04, signed and sealed by Kelvyn A. Whitfield, P.E.

G. OTHER

None

Jaime D. Gascon, P.E.
Chief, Product Control Division
NOA No 06-1002.08
Expiration Date: September 27, 2011
Approval Date: May 17, 2007

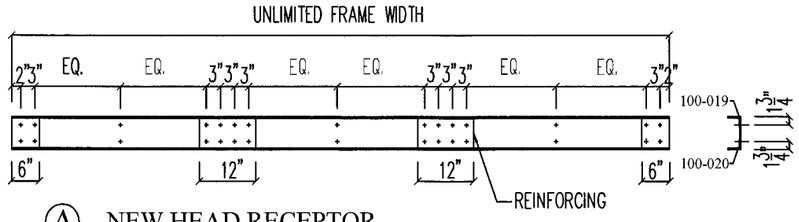

Ⓐ NEW HEAD RECEPTOR
BOTTOM VIEW

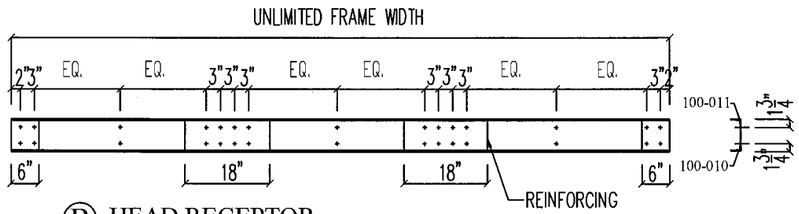

Ⓑ HEAD RECEPTOR
BOTTOM VIEW

NOTE: THESE HEAD RECEPTORS APPLY TO ELEVATIONS ON BOTH SHEETS 1 AND 2

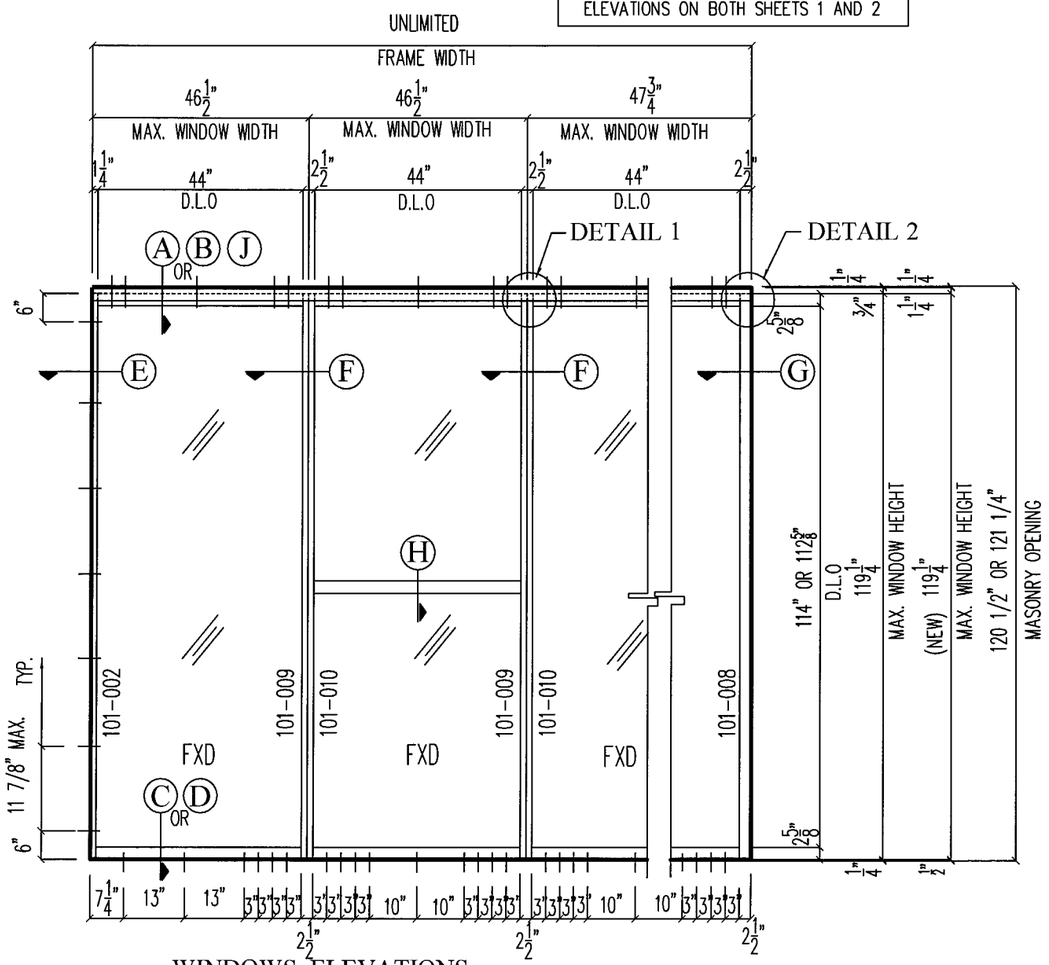

WINDOWS ELEVATIONS

GLASSWALL: SERIES 101 ALUMINUM WINDOW WALL.
LARGE MISSILE IMPACT

NOTES

1. THIS WINDOW SYSTEM IS DESIGNED AND TESTED TO COMPLY WITH THE REQUIREMENTS OF THE 2004 (REV 2005) HIGH VELOCITY HURRICANE ZONES. FLORIDA BUILDING CODE CHAPTER 16 AND 24 AND UNDER THE SPECIFIC CONDITIONS SHOWN ON THIS DRAWING.
2. ALL EXTRUSIONS ARE ALUMINUM, 6005-T5 UNLESS OTHERWISE NOTED.
3. BASED ON REPORT LABORATORY No.3348 AND No.4034 FENESTRATION TESTING LAB., INC.
4. A 1/3 STRESS INCREASE WAS NOT INCLUDED IN CALCULATIONS OF ALLOWABLE ANCHOR LOADS.

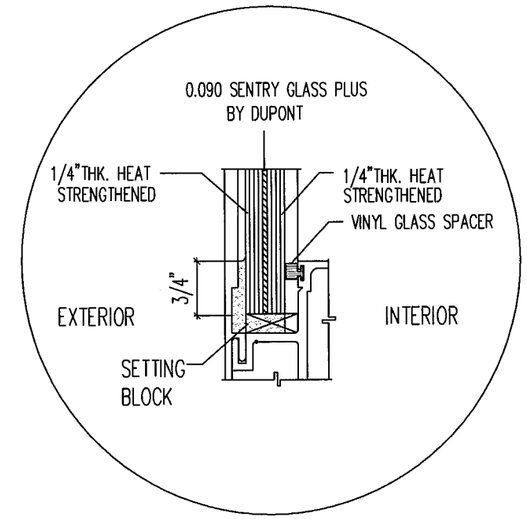

LARGE MISSILE GLAZING DETAIL
9/16" LAMINATED GLASS

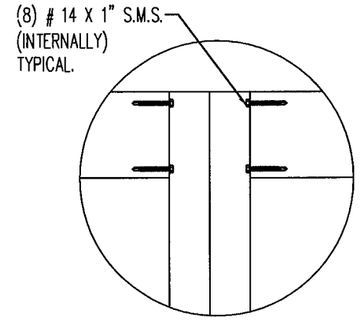

DETAIL 1

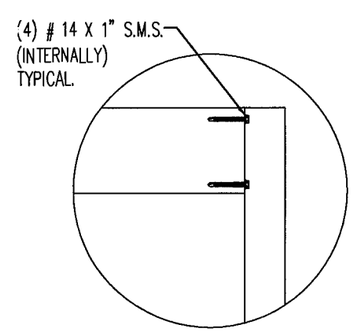

DETAIL 2

Design Load Capacity (P. S. F.)	
POSITIVE	NEGATIVE
110	110
MAX. WINDOW WIDTH = 46 1/2"	

PRODUCT REVISED
as complying with the Florida Building Code
Acceptance No 06-1002.08
Expiration Date 09/27/2011
By
Miami Dade Product Control Division

ELEVATION SHEET

KELVYN WHITFIELD.P.E
1002 NE 116 ST
MIAMI, FL 33161
DATE 4/18/07
FLORIDA No-24140
MECHANICAL

Glasswall Llc.
3550 NW 49th Street
Miami, Florida 33142
Tel +305-638-5151 - Fax +305-638-5158

Series # 101
FIXED WINDOW
Large Missile

Revision			
No	Date	By	Description
3	12-4-04		Redraw and Revised
4	04-07-05		
5	09-01-06		
6	11-21-06		Per BCCO

Date	12-4-04
Scale	As noted
Design by	G. S.
Drawing by	M. G.
Checked by	G. S.
Drawing No.	02-0164
Sheet 1 of 5	

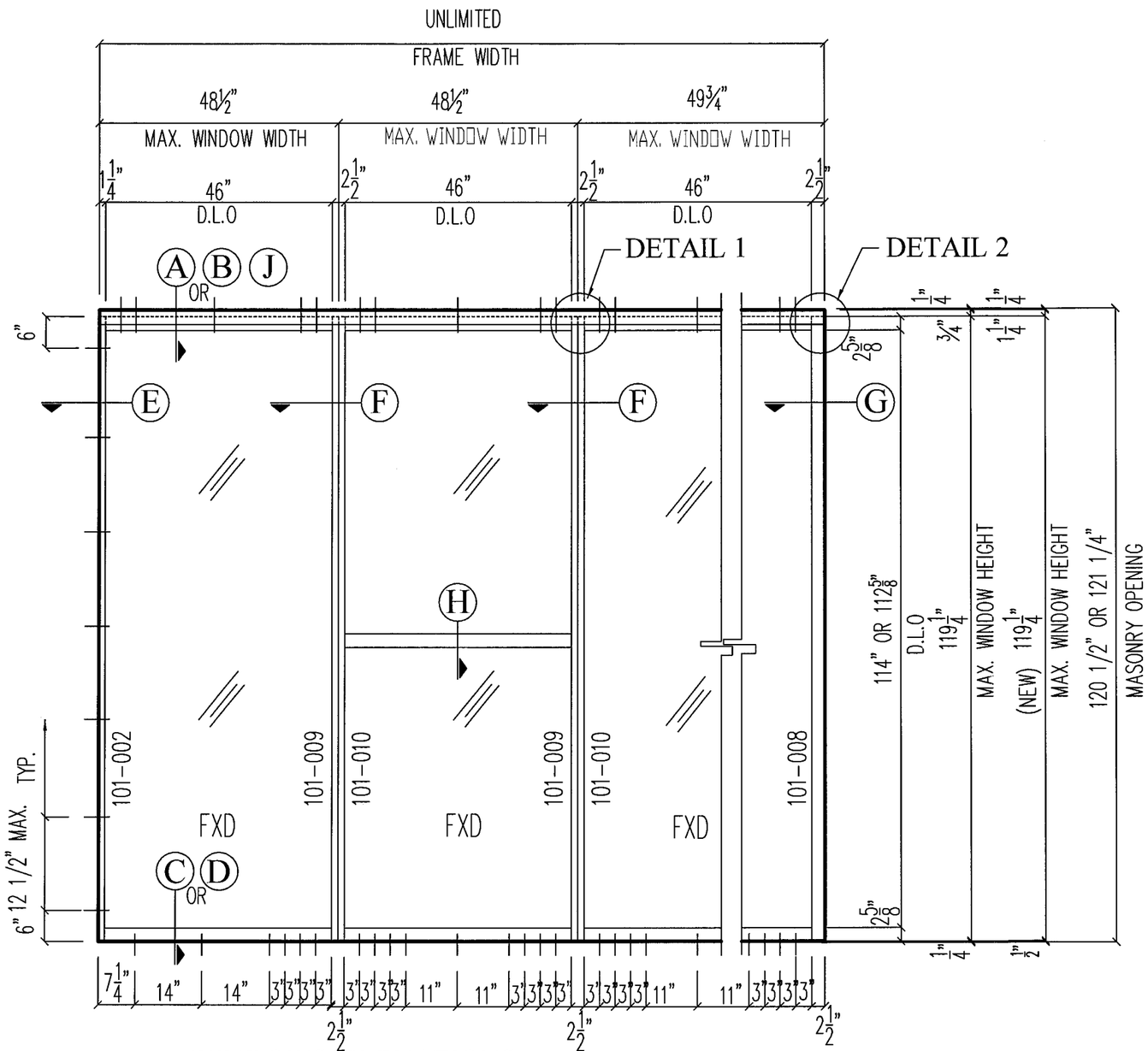

WINDOWS ELEVATIONS

Design Load Capacity (P. S. F.)	
POSITIVE	NEGATIVE
100	100
MAX. WINDOW WIDTH = 48 1/2"	

Glasswall Llc.
3550 NW 49th Street
Miami, Florida 33142
Tel +305-638-5151 - Fax +305-638-5158

Series # 101
FIXED WINDOW
Large Missile

Revision

No	Date	By	Description
03	12-4-04		Redraw and Revised
04	04-07-05		
05	09-01-06		
06	11-21-06		Per BCCO

Date	12-4-04
Scale	As noted
Design by	G. S.
Drawing by	M. G.
Checked by	G. S.
Drawing No.	02-0164
Sheet 2 of 5	

PRODUCT REVISED
in complying with the Florida
Building Code
Acceptance No 06-1002.08
Expiration Date 09/27/2011
By
Miami Dade Product Control
Division

ELEVATION SHEET

KELVYN WHITFIELD.P.E
1002 NE 116 ST
MIAMI, FL 33161

DATE 4/18/07
FLORIDA No-24140
MECHANICAL

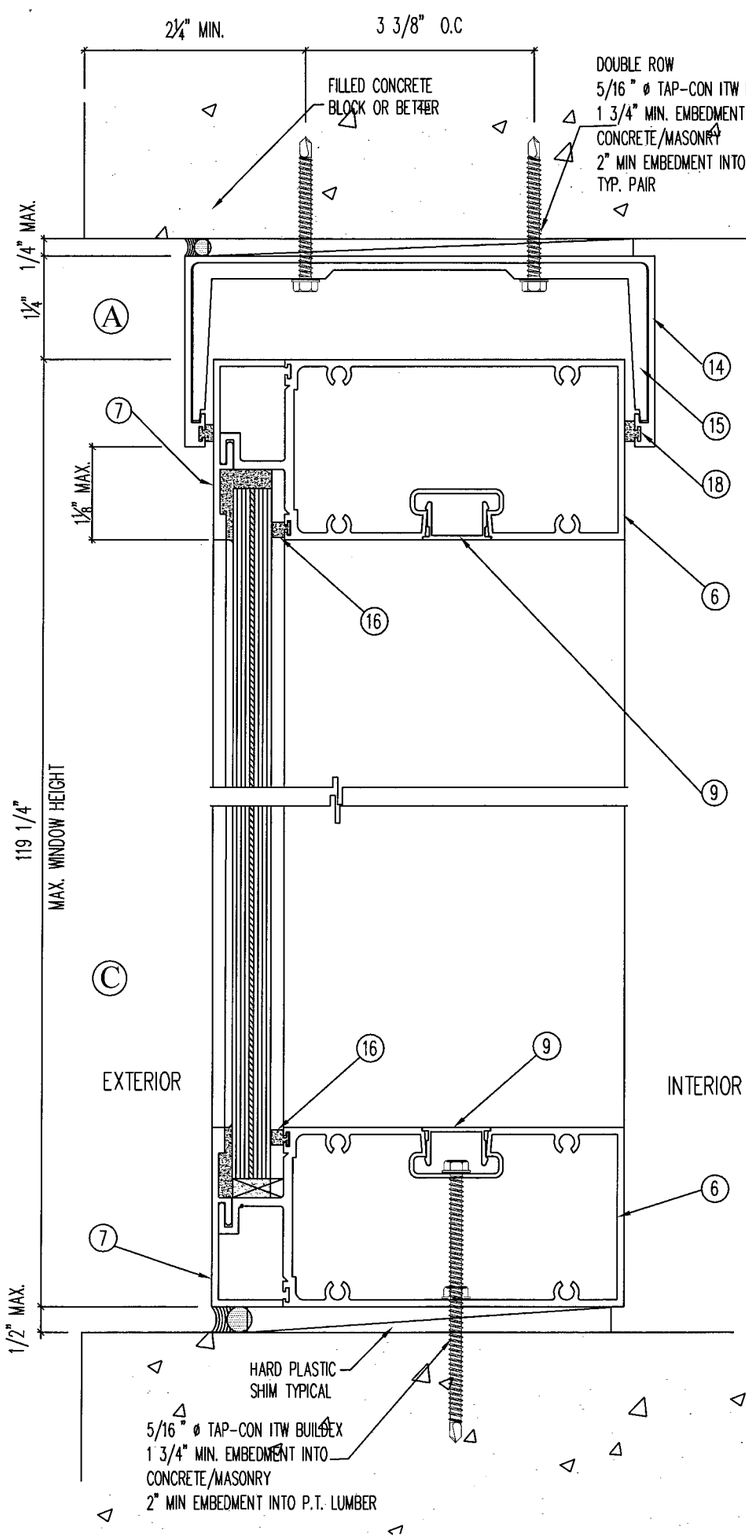

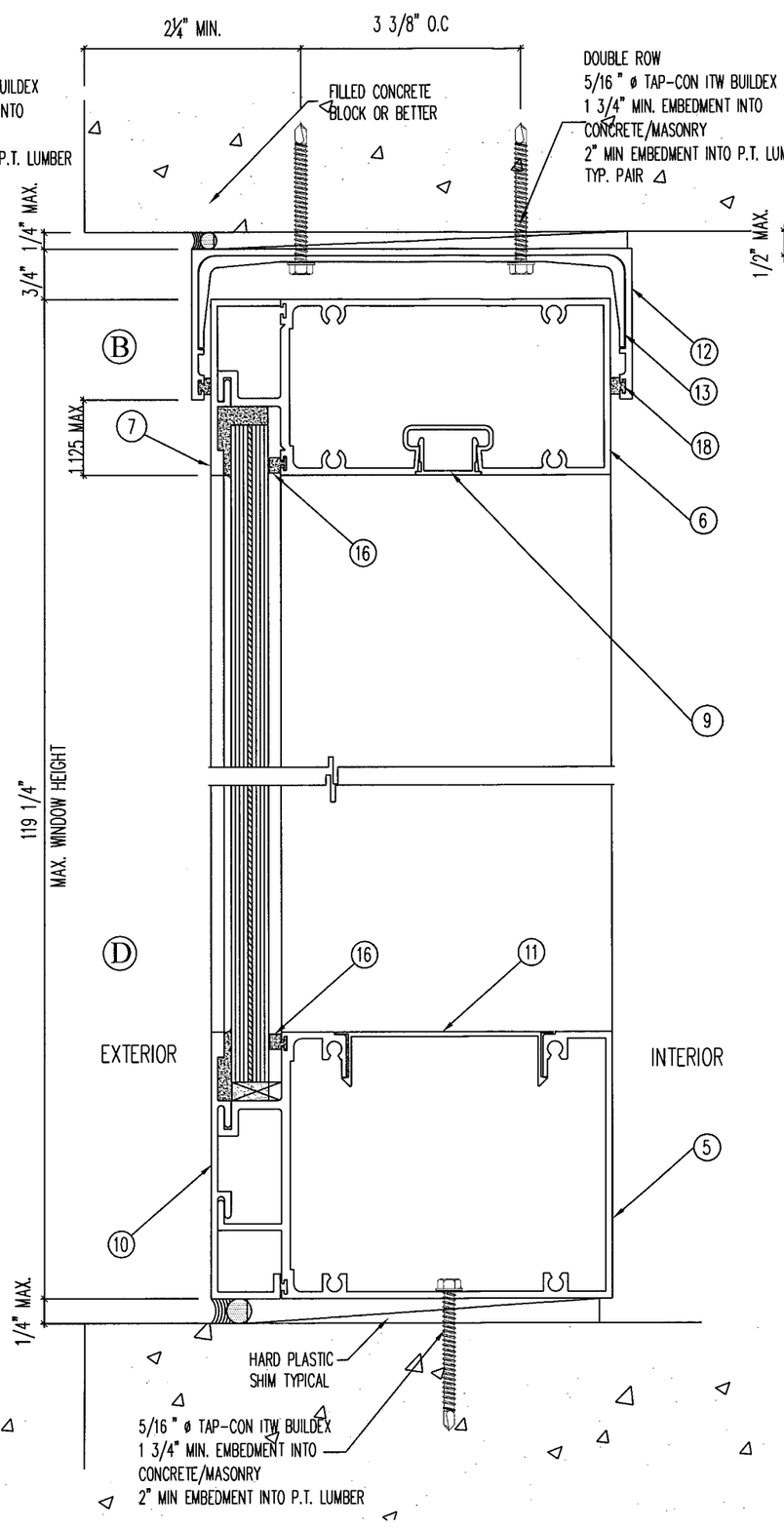

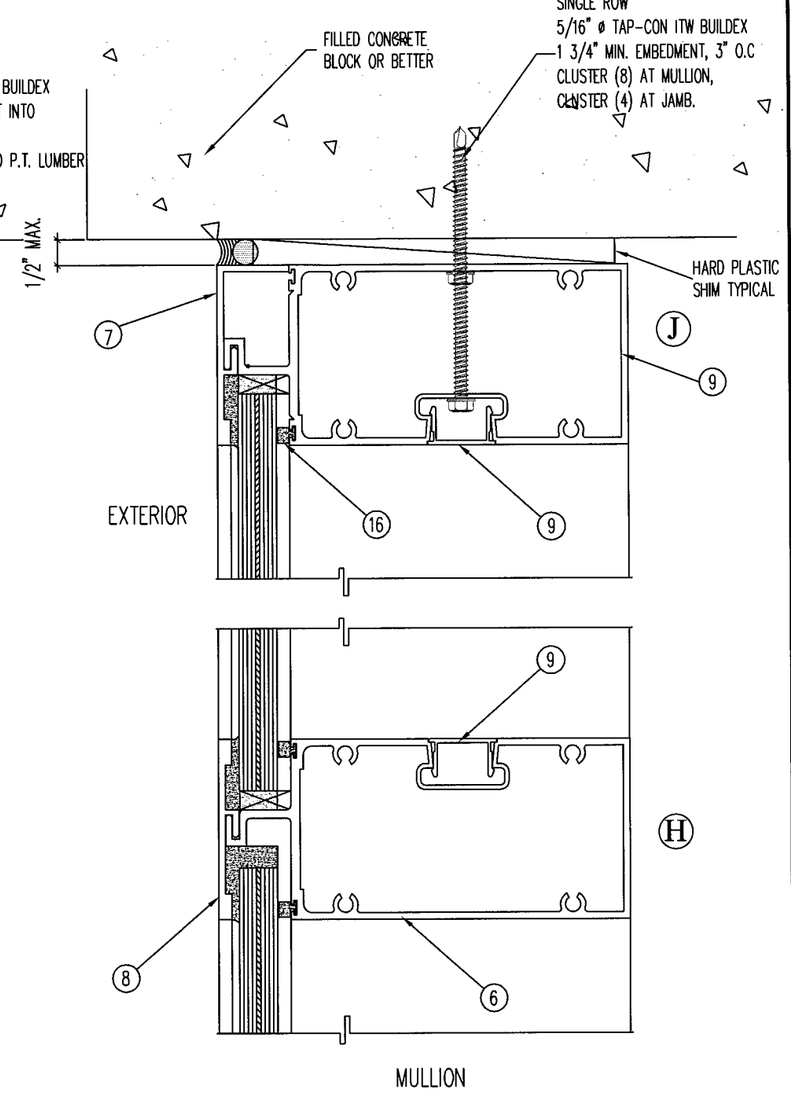

Glasswall Llc.
3550 NW 49th Street
Miami, Florida 33142
Tel +305-638-5151 - Fax +305-638-5158

Series # 101
FIXED WINDOW
Large Missile

Revision			
No	Date	By	Description
3	12-4-04		Redraw and Revised
4	04-07-05		
5	09-01-06		
6	11-21-06		Per BCCO

Date	12-4-04
Scale	As noted
Design by	G. S.
Drawing by	M. G.
Checked by	G. S.
Drawing No. 02-0164	
Sheet 3 of 5	

PRODUCT REVISED
as complying with the Florida Building Code
Acceptance No 06-1006.08
Expiration Date 09/27/2011
By
Miami Dade Product Control Division

INSTALATION SHEET

KELVYN WHITFIELD.P.E
1002 NE 116 ST
MIAMI, FL 33161

DATE 4/18/07
FLORIDA No-24140
MECHANICAL

CONFIGURATIONS

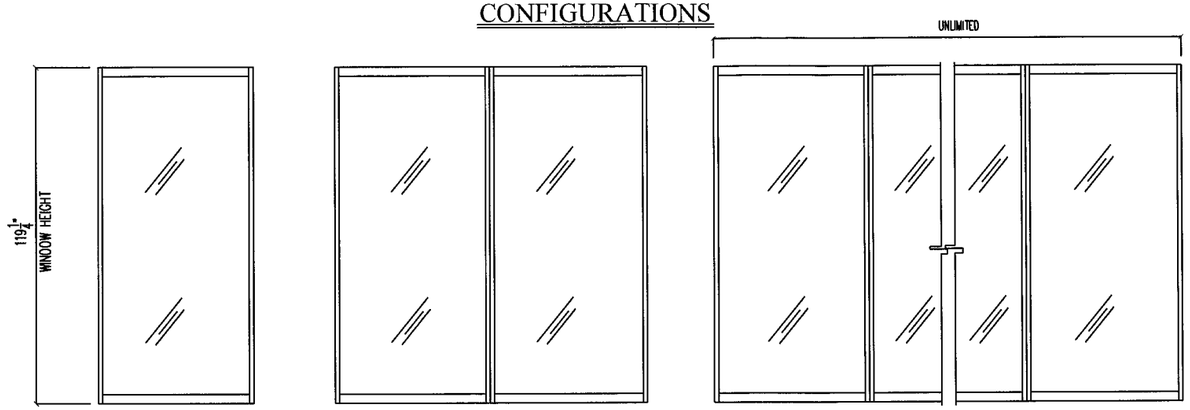

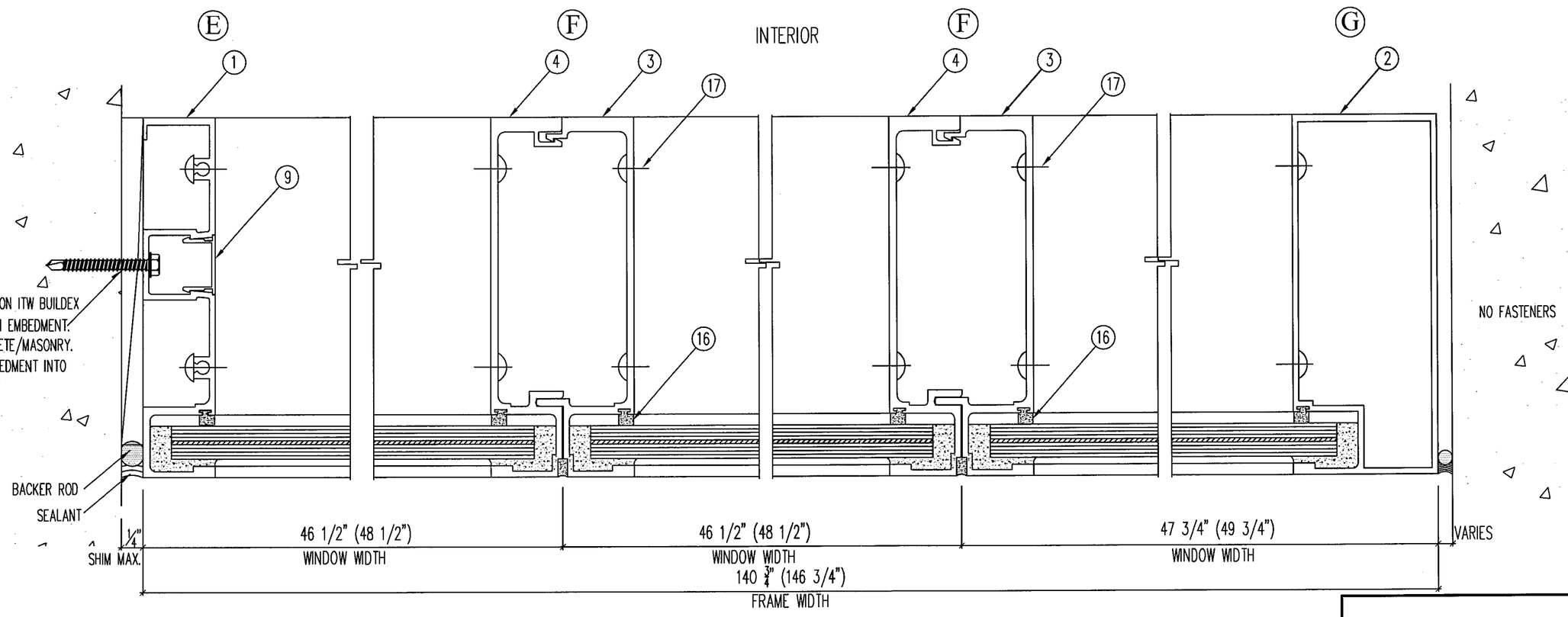

Glasswall Llc.
3550 NW 49th Street
Miami, Florida 33142
Tel +305-638-5151 - Fax +305-638-5158

Series # 101
FIXED WINDOW
Large Missile

Revision

No	Date	By	Description
3	12-4-04		Redraw and Revised
4	04-07-05		
5	09-01-08		
6	11-21-06		Per BCCO

Date	12-4-04
Scale	As noted
Design by	G. S.
Drawing by	M. G.
Checked by	G. S.
Drawing No.	02-0164
Sheet 4 of 5	

PRODUCT REVISED
as complying with the Florida Building Code
Acceptance No 06-1002.08
Expiration Date 09/27/2011
By
Miami Dade Product Control Division

INSTALATION SHEET

KELVYN WHITFIELD.P.E
1002 NE 116 ST
MIAMI, FL 33161

DATE 4/18/07
FLORIDA No-24140
MECHANICAL

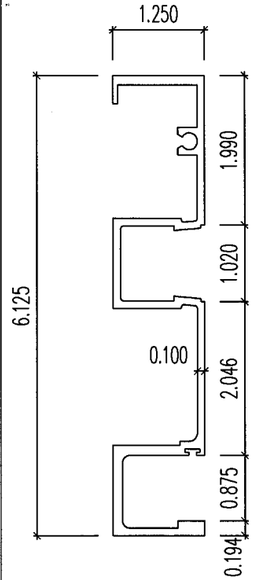

① JAMB # 101-002

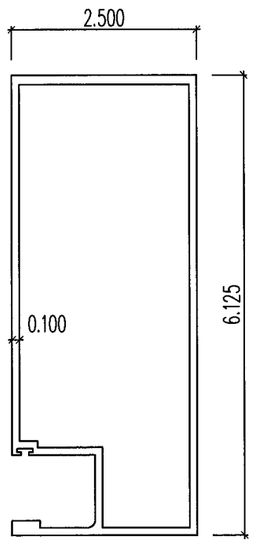

② JAMB # 101-008

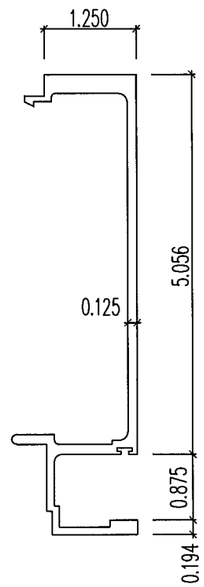

③ MALE # 101-009

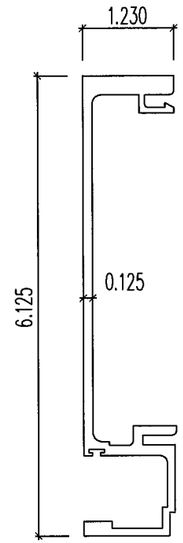

④ FEMALE # 101-010

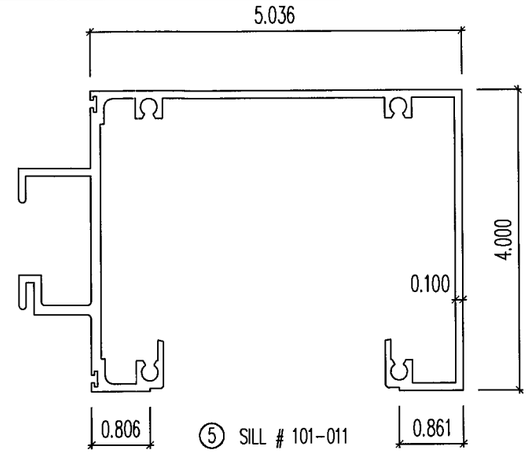

⑤ SILL # 101-011

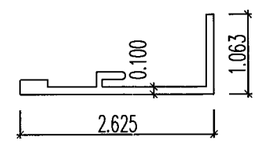

⑦ GLAZING BEAD # 101-007

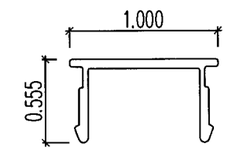

⑨ SNAP COVER # 101-006

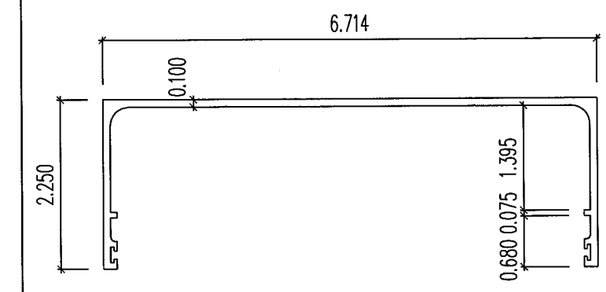

⑫ HEAD RECEPTOR # 100-011

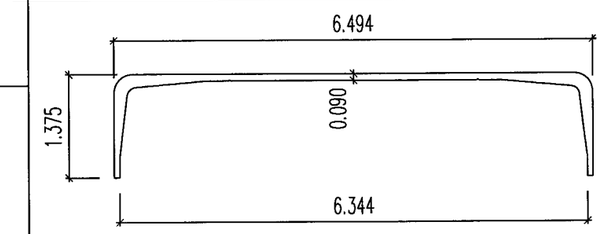

⑬ HEAD RECEPTOR # 100-010

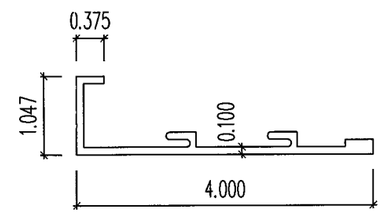

⑩ GLAZING BEAD # 101-012

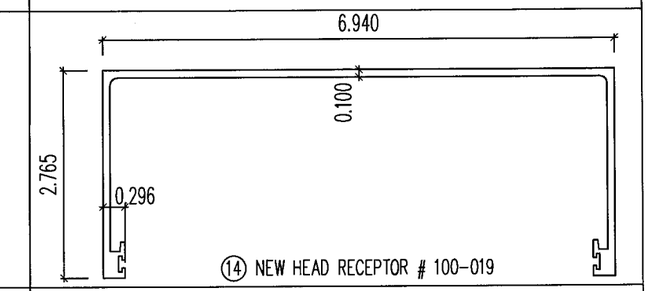

⑭ NEW HEAD RECEPTOR # 100-019

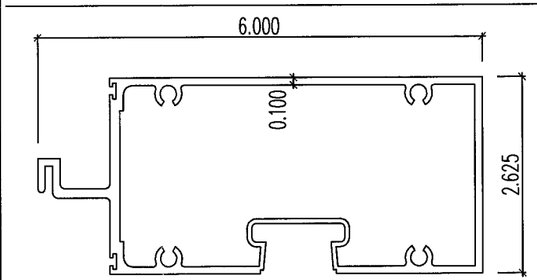

⑥ HEAD # 101-001

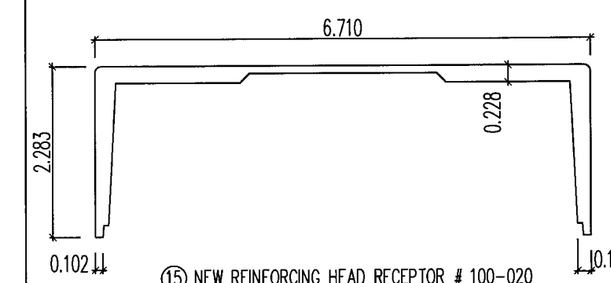

⑮ NEW REINFORCING HEAD RECEPTOR # 100-020

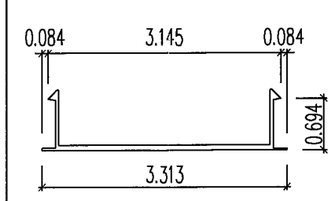

⑪ SNAP COVER #101-015

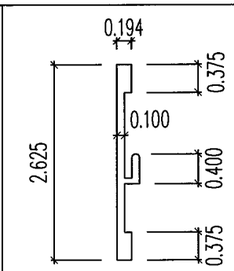

⑧ GLAZING BEAD # 101-005

	Item #	Part Number	Part Name	Remarks	
FIXED WINDOW	1	101-002	Jamb	Frame	ALUM. ALLOY 6005-T5
	2	101-008	Jamb	Frame	ALUM. ALLOY 6005-T5
	3	101-009	Male Jamb	Frame	ALUM. ALLOY 6005-T5
	4	101-010	Female Jamb	Frame	ALUM. ALLOY 6005-T5
	5	101-011	Sill	Frame	ALUM. ALLOY 6005-T5
	6	101-001	Head and Sill	Frame	ALUM. ALLOY 6005-T5
	7	101-007	Glazing Bead	–	ALUM. ALLOY 6005-T5
	8	101-005	Glazing Bead	–	ALUM. ALLOY 6005-T5
	9	101-006	Snap Cover	–	ALUM. ALLOY 6005-T5
	10	101-012	Glazing Bead	–	ALUM. ALLOY 6005-T5
	11	101-015	Snap Cover	–	ALUM. ALLOY 6005-T5
	12	100-011	Head Receptor	–	ALUM. ALLOY 6005-T5
	13	100-010	Reinforcing Head Receptor	–	ALUM. ALLOY 6005-T5
	14	100-019	Head Receptor- NEW	–	ALUM. ALLOY 6005-T5
	15	100-020	Reinforcing Head Receptor-NEW	–	ALUM. ALLOY 6005-T5
	16	#679-FP-888B	Gasket	Prototype Plastic	
	17	Fastener	#14x1" PH-PH S.M.S S/S	Assembly Screws	
	18		7P-448	Prototype Plastic	

PRODUCT REVISED
in complying with the Florida Building Code
Acceptance No 06-1002.08
Expiration Date 09/27/2011
By _____
Miami Dade Product Control Division

PART LIST

KELVYN WHITFIELD.P.E
1002 NE 116 ST
MIAMI, FL 33161

DATE 4/18/07.
FLORIDA No-24140
MECHANICAL

Glasswall Llc.
3550 NW 49th Street
Miami, Florida 33142
Tel +305-638-5151 - Fax +305-638-5158

Series # 101
FIXED WINDOW
Large Missile

Revision

No	Date	By	Description
③	12-4-04		
④	04-07-05		Redraw and Revised
⑤	09-01-06		
⑥	11-21-06		Per BCCO

Date	12-4-04
Scale	As noted
Design by	G. S.
Drawing by	M. G.
Checked by	G. S.
Drawing No.	02-0164
Sheet 5 of 5	