MIAMI-DADE

BUILDING CODE COMPLIANCE OFFICE (BCCO)
PRODUCT CONTROL DIVISION

MIAMI-DADE COUNTY, FLORIDA
METRO-DADE FLAGLER BUILDING
140 WEST FLAGLER STREET, SUITE 1603
MIAMI, FLORIDA 33130-1563
(305) 375-2901 FAX (305) 375-2908

NOTICE OF ACCEPTANCE (NOA)

Union Corrugating Company
701 South King Street
Fayetteville, NC 23802-0229

SCOPE:
This NOA is being issued under the applicable rules and regulations governing the use of construction materials. The documentation submitted has been reviewed by Miami-Dade County Product Control Division and accepted by the Board of Rules and Appeals (BORA) to be used in Miami Dade County and other areas where allowed by the Authority Having Jurisdiction (AHJ).

This NOA shall not be valid after the expiration date stated below. The Miami-Dade County Product Control Division (In Miami Dade County) and/or the AHJ (in areas other than Miami Dade County) reserve the right to have this product or material tested for quality assurance purposes. If this product or material fails to perform in the accepted manner, the manufacturer will incur the expense of such testing and the AHJ may immediately revoke, modify, or suspend the use of such product or material within their jurisdiction. BORA reserves the right to revoke this acceptance, if it is determined by Miami-Dade County Product Control Division that this product or material fails to meet the requirements of the applicable building code.

This product is approved as described herein, and has been designed to comply with the Florida Building Code and the High Velocity Hurricane Zone of the Florida Building Code.

DESCRIPTION: Master Rib® Metal Roof Panel

LABELING: Each panel shall bear a permanent label with the manufacturer's name or logo, city, state and the following statement: "Miami-Dade County Product Control Approved", unless otherwise noted herein.

RENEWAL of this NOA shall be considered after a renewal application has been filed and there has been no change in the applicable building code negatively affecting the performance of this product.

TERMINATION of this NOA will occur after the expiration date or if there has been a revision or change in the materials, use, and/or manufacture of the product or process. Misuse of this NOA as an endorsement of any product, for sales, advertising or any other purposes shall automatically terminate this NOA. Failure to comply with any section of this NOA shall be cause for termination and removal of NOA.

ADVERTISEMENT: The NOA number preceded by the words Miami-Dade County, Florida, and followed by the expiration date may be displayed in advertising literature. If any portion of the NOA is displayed, then it shall be done in its entirety.

INSPECTION: A copy of this entire NOA shall be provided to the user by the manufacturer or its distributors and shall be available for inspection at the job site at the request of the Building Official.

This revises NOA No. 05-0919.08 and consists of pages 1 through 6.
The submitted documentation was reviewed by Alex Tigera.

ROOFING ASSEMBLY APPROVAL:

Category:	Roofing
Sub-Category:	Non-Structural Metal Roofing
Material:	Steel
Deck Type:	Wood
Maximum Design Pressure	**-114.3 psf. See Table A Herein**

TRADE NAMES OF PRODUCTS MANUFACTURED OR LABELED BY APPLICANT:

Product	Dimensions	Test Specifications	Product Description
Master Rib Metal Roof Panel	Length: varies Width: 41" (Coverage width : 36") Height: ¾" Min. Thickness 0.019"	TAS 125	Metal Roof panel coated with various approved coatings of Ceram-A-Star® 1050.

EVIDENCE SUBMITTED:

Test Agency	Test Identifier	Test Name/Report	Date
Akzo Nobel Coatings, Inc.	Lab Test Certification	ASTM B-117 ASTM G-23	
Ceram-A-Star	Lab Test Certification	ASTM B-117 ASTM G-23	
PRI Asphalt Technologies, Inc.	UCC-002-02-01	TAS 100	05/22/02
Hurricane Test Laboratory, Inc.	0293-0417-02 0293-0611-05	TAS 125	06/14/02 06/28/05

SYSTEM DESCRIPTION

SYSTEM A-1S:	"Master Rib" 26 Ga. Metal Panel
Deck Type:	Wood, Non-insulated
Deck Description:	$^{19}/_{32}$" or greater plywood or wood plank.
Slope Range:	2": 12" or greater
Maximum Uplift Pressure:	**See General Limitations #2**

Deck Attachment:	In accordance with applicable Building Code, but in no case it shall be less than #8 x 2" screws spaced at 6" o. c. In reroofing, where the deck is less than 19/32" thick (Minimum 15/32"), the above attachment method must be in addition to existing attachment.
Underlayment:	Minimum underlayment shall be an ASTM D 226 Type II installed with a minimum 4" side-laps and 6" end-laps. Underlayment shall be fastened with corrosion resistant tin-caps and 1¼" annular ring-shank nails, spaced 6" o.c. at all laps and two staggered rows 12" o.c. in the field of the roll.
Valleys:	Valley construction shall be in compliance with Roofing Application Standard RAS 133 and with Union Corrugating Company's current published installation instructions.
Fire Barrier Board:	Any approved fire barrier having an NOA. Or for class A or B fire rating, install minimum ¼" thick Georgia Pacific "Dens Deck" (with current NOA) or minimum 4mm thick of Tritex, RockRoof (with current NOA) or $^{5}/_{8}$" water resistant type X gypsum sheathing with treated core and facer or Elk Versashield (with current NOA).
Metal Panels and Accessories:	Install the "Master Rib Roofing Panel" and accessories in compliance with Union Corrugating Company's current published installation instructions and details. Flashing, penetrations, valley construction and other details shall be constructed in compliance with the minimum requirements provided in Roofing Application Standards RAS 133. Master Rib Roofing Panels shall be fastened with a minimum of #9 Hex Head Wood corrosion resistant fasteners with sealing washer. Fasteners shall of sufficient length to penetrate through the sheathing a minimum of $^{3}/_{16}$". Fasteners shall be place in accordance with fastener detail herein as follows:

1. Panel side ribs shall be fastened along side of the panel inside rib, one fastener at the overlap. Field panel ribs shall be fastened with one fastener per rib the side of the panel.
2. All fasteners at center ribs and overlap rib shall be spaced at a maximum distance as noted in **Table A** below parallel to the roof slope. See detail herein.
3. Pane overlap shall be fastened at the high point with ¼-7/8" long Hex Head corrosion resistant fasteners with sealing washer spaced at a maximum distance as noted in **Table A** below parallel to the roof slope. See detail herein.

TABLE A **Maximum Design Pressure**		
	Field	**Perimeter and Corner[1]**
Maximum Design Pressure	**-61.8 psf**	**-114.3 psf**
Maximum Fastener Spacing	**30" o.c.**	**24" o.c.**
1. Extrapolation shall not be allowed		

GENERAL LIMITATIONS:

1. Fire classification is not part of this acceptance; refer to a current Approved Roofing Materials Directory for fire ratings of this product.

2. Neither rational analysis, nor extrapolation shall be permitted for the maximum design pressures listed in the "Perimeter and Corner" roof areas as noted in Table "A" herein.

3. Panels shall be roll formed in continuous lengths from eave to ridge. Maximum lengths shall be as described in Roofing Application Standard RAS 133.

4. All panels shall be permanently labeled with the manufacturer's name or logo, city, state and the following statement: "Miami Dade County Product Control Approved".

DRAWINGS

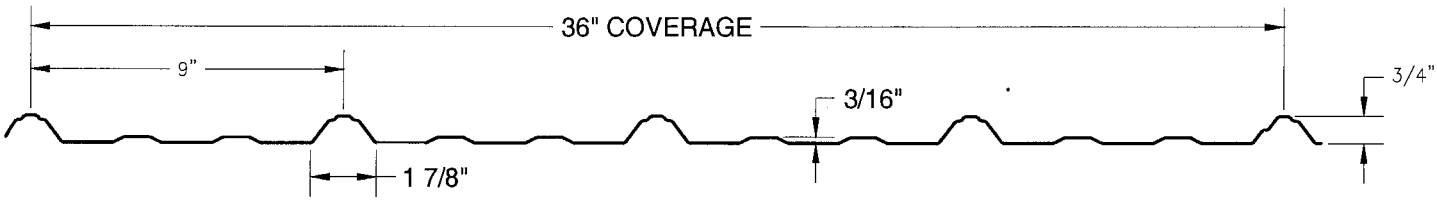

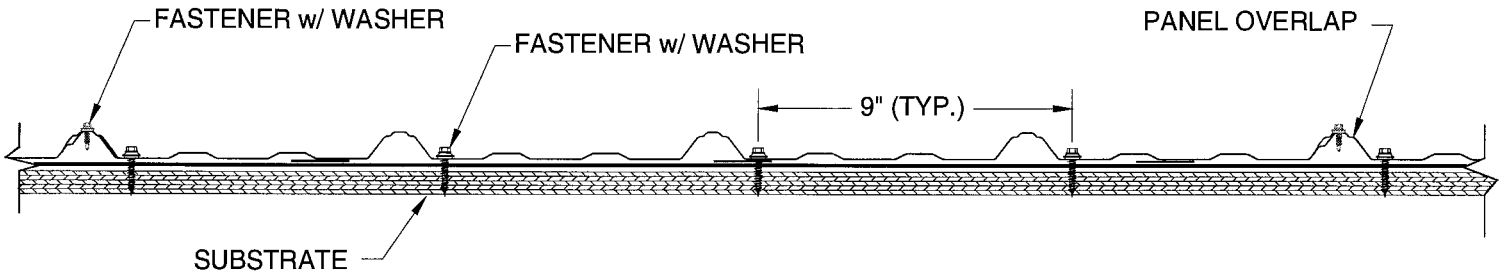

FASTENING PATTERN OF PANEL

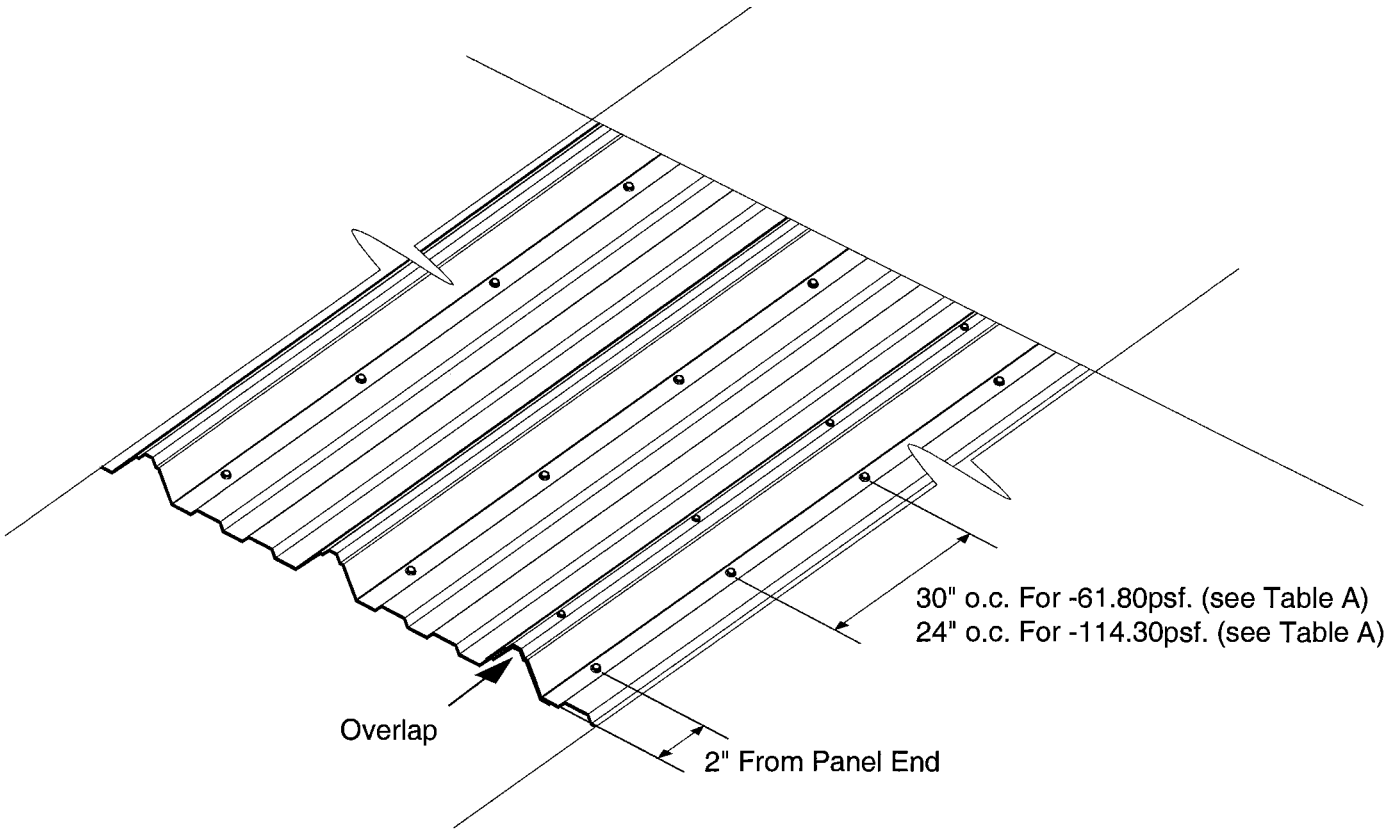

MASTER RIB PANEL

END OF THIS ACCEPTANCE