MIAMI-DADE

BUILDING CODE COMPLIANCE OFFICE (BCCO)
PRODUCT CONTROL DIVISION

MIAMI-DADE COUNTY, FLORIDA
METRO-DADE FLAGLER BUILDING
140 WEST FLAGLER STREET, SUITE 1603
MIAMI, FLORIDA 33130-1563
(305) 375-2901 FAX (305) 375-2908

NOTICE OF ACCEPTANCE (NOA)

Detail Roofing, Inc.
1167 NE 24 St
Wilton Manors, FL. 33305

SCOPE:
This NOA is being issued under the applicable rules and regulations governing the use of construction materials. The documentation submitted has been reviewed by the BCCO and accepted by the Building Code and Product Review Committee to be used in Miami Dade County and other areas where allowed by the Authority Having Jurisdiction (AHJ).

This NOA shall not be valid after the expiration date stated below. The BCCO (In Miami Dade County) and/or the AHJ (in areas other than Miami Dade County) reserve the right to have this product or material tested for quality assurance purposes. If this product or material fails to perform in the accepted manner, the manufacturer will incur the expense of such testing and the AHJ may immediately revoke, modify, or suspend the use of such product or material within their jurisdiction. BCCO reserves the right to revoke this acceptance, if it is determined by BCCO that this product or material fails to meet the requirements of the applicable building code.

This product is approved as described herein, and has been designed to comply with the Florida Building Code and the High Velocity Hurricane Zone of the Florida Building Code.

DESCRIPTION: Englert Series 2000 Aluminum Roof Panel.

LABELING: Each unit shall bear a permanent label with the manufacturer's name or logo, city, state and following statement: "Miami-Dade County Product Control Approved", unless otherwise noted herein.

RENEWAL of this NOA shall be considered after a renewal application has been filed and there has been no change in the applicable building code negatively affecting the performance of this product.

TERMINATION of this NOA will occur after the expiration date or if there has been a revision or change in the materials, use, and/or manufacture of the product or process. Misuse of this NOA as an endorsement of any product, for sales, advertising or any other purposes shall automatically terminate this NOA. Failure to comply with any section of this NOA shall be cause for termination and removal of NOA.

ADVERTISEMENT: The NOA number preceded by the words Miami-Dade County, Florida, and followed by the expiration date may be displayed in advertising literature. If any portion of the NOA is displayed, then it shall be done in its entirety.

INSPECTION: A copy of this entire NOA shall be provided to the user by the manufacturer or its distributors and shall be available for inspection at the job site at the request of the Building Official.

This NOA consists of pages 1 through 5.
The submitted documentation was reviewed by Alex Tigera.

ROOFING ASSEMBLY APPROVAL:

Category:	Roofing
Sub-Category:	07410 Non-Structural Metal Roofing
Material:	Aluminum
Deck Type:	Wood
Maximum Design Pressure	**See Table A**

TRADE NAMES OF PRODUCTS MANUFACTURED OR LABELED BY APPLICANT:

Product	Dimensions	Test Specifications	Product Description
Series 2000	l = various w = 18" Thickness 0.040"	TAS 110 TAS 125	Aluminum, preformed, standing seam panels.
Series 2000 Clip	min. 0.048" 3½" long x 1¾" high	TAS 114	Corrosion resistant, formed, steel clips for metal panel installation.
Trim Pieces	l = varies w = varies Thickness 0.040"	TAS 110	Standard flashing and trim pieces. Manufactured for each panel width.

EVIDENCE SUBMITTED:

Test Agency	Test Identifier	Test Name/Report	Date
Architectural Testing, Inc.	01-32796.01	TAS 100	Sep. 1998
Architectural Testing, Inc.	01-46070.02	TAS 125 ASTM E 8	10/23/03
Hurricane Test Laboratory, LLC.	0155-0404-04	TAS 125	04/16/04

APPROVED ASSEMBLIES:

Deck Type: Wood, Non-Insulated

Deck Description: $^{19}/_{32}$" or greater plywood or wood plank.

Slope Range: 2":12" or greater

Maximum Uplift Pressure: See Table A Below

Deck Attachment: In accordance with applicable Building Code, but in no case shall it be less than 8d annular ring shank nails spaced 6" o.c. In reroofing, where the deck is less than $^{19}/_{32}$" thick (Minimum $^{15}/_{32}$"). The above attachment method must be in addition to existing attachment.

Underlayment: Minimum underlayment shall be a ASTM D 226 Type II installed with a minimum 4" side-laps and 6" end-laps. Underlayment shall be fastened with corrosion resistant tin-caps and 1¼" annular ring-shank nails, spaced 6" o.c. at all laps and two staggered rows 12" o.c. in the field of the roll. Or, any Miami-Dade County Product Control Approved underlayment having a current NOA.

Valleys: Valley construction shall be in compliance with Roofing Application Standard RAS 133 and with Englert's current published installation instructions.

Fire Barrier Board: Any approved fire barrier having a current NOA. Or for a class A or B fire rating, install minimum ¼" thick Georgia Pacific "Dens Deck" (with current NOA) or minimum 4mm thick of Tritex, RockRoof (with current NOA) or $^{5}/_{8}$" water resistant type X gypsum sheathing with treated core and facer.

Metal Panels and Accessories: Install the "Series 2000 Panel" and accessories in compliance with the current published installation instructions and details in Englert's Installation Manual. Flashings, penetrations, valley construction and other details shall be constructed in compliance with Roofing Application Standard RAS 133. Male leg of snap seam shall be caulked with a minimum $^{1}/_{8}$" bead of elastomeric construction sealant prior to installation of female leg of panel.

Panels shall be installed with galvanize steel clips (3½" long x 2 ½" wide x 1¾" tall), attached to substrate with (2) two corrosion resistant #10-16 self-tapping pancake screws of sufficient length to penetrate through the sheathing a minimum of $^{3}/_{16}$". Clip fastening shall start 3" from panel end and shall be at maximum spacing as described below in Table A.

TABLE A
MAXIMUM DESIGN PRESSURES

Roof Areas	Field	Perimeter and Corner[1]
Maximum Design Pressures	–70 psf	–123.5 psf
Maximum Clip Spacing	24" o.c.	8" o.c.

1. Extrapolation shall not be allowed

SYSTEM LIMITATIONS:

1. The maximum designed pressure listed herein shall be applicable to all roof pressure zones (i.e. field, perimeters, and corners). Neither rational analysis, nor extrapolation shall be permitted for enhanced fastening at enhanced pressure zones (i.e. perimeters, extended corners and corners).

2. Panels shall be roll formed in continuous lengths from eave to ridge. Maximum lengths shall be as described in Miami-Dade County Roofing Application Protocol RAS 133.

3. All panels shall be permanently labeled with the manufacturer's name and/or logo, and the following statement: "Miami-Dade County Product Control Approved. All clips shall be permanently labeled Englert, and/or logo, and/or model.

4. All products listed herein shall have a quality assurance audit in accordance with the Florida Building Code and Rule 9B-72 of the Florida Administrative Code.

5. Panels may be jobsite roll formed with machine model **#030606** from Englert Inc.

PROFILE DRAWING
SERIES 2000

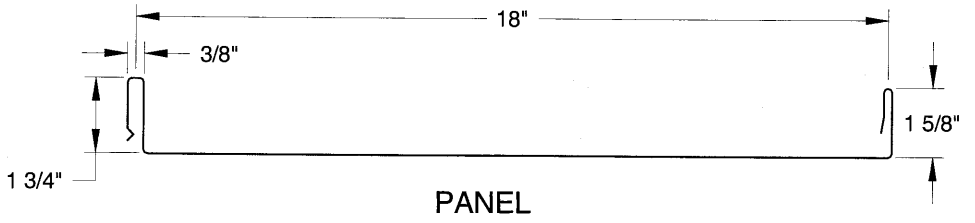

PANEL

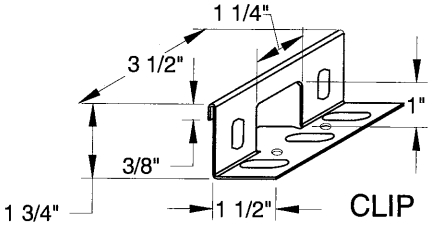

CLIP

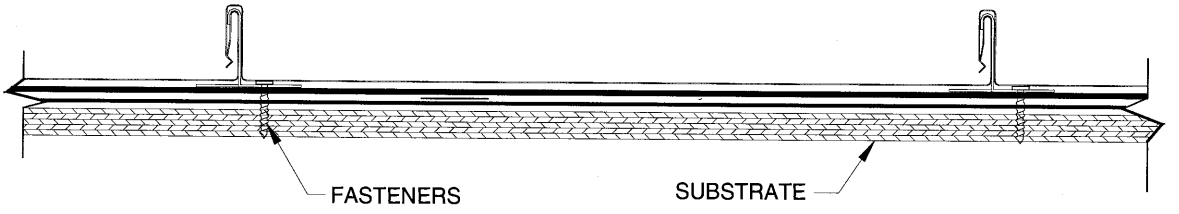

PANEL WITH CLIP & FASTENERS

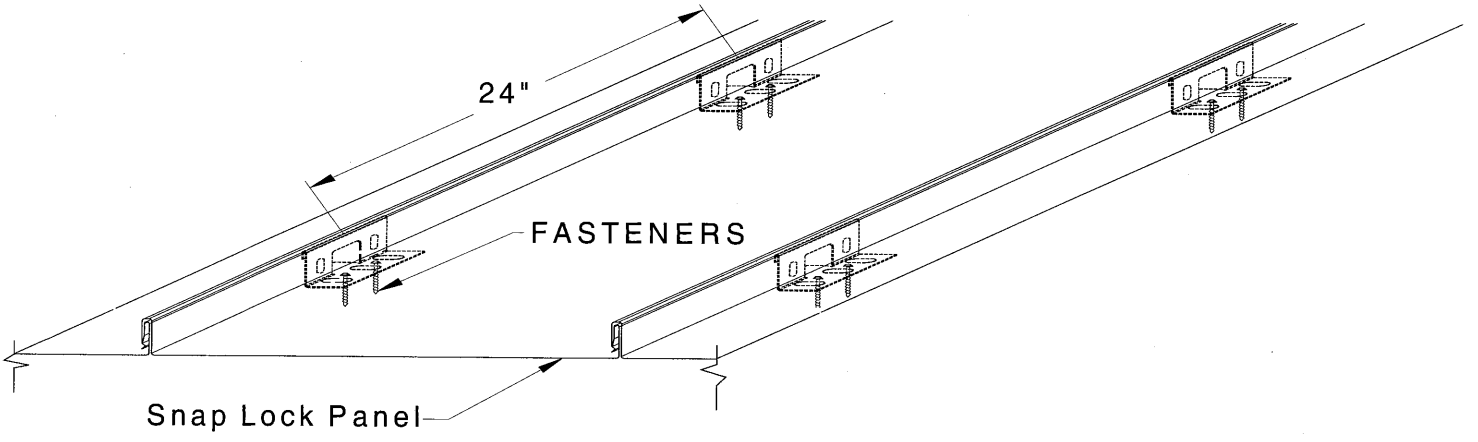

END OF THIS ACCEPTANCE