MIAMI-DADE COUNTY
BUILDING CODE COMPLIANCE OFFICE (BCCO)
PRODUCT CONTROL DIVISION

MIAMI-DADE COUNTY, FLORIDA
METRO-DADE FLAGLER BUILDING

140 WEST FLAGLER STREET, SUITE 1603
MIAMI, FLORIDA 33130-1563
(305) 375-2901 FAX (305) 375-2908
www.miamidade.gov

NOTICE OF ACCEPTANCE (NOA)

Poma Corporation
9040 Belvedere Road
West Palm Beach, Florida 33411

SCOPE:
This NOA is being issued under the applicable rules and regulations governing the use of construction materials. The documentation submitted has been reviewed by Miami-Dade County Product Control Division and accepted by the Board of Rules and Appeals (BORA) to be used in Miami Dade County and other areas where allowed by the Authority Having Jurisdiction (AHJ).

This NOA shall not be valid after the expiration date stated below. The Miami-Dade County Product Control Division (In Miami Dade County) and/or the AHJ (in areas other than Miami Dade County) reserve the right to have this product or material tested for quality assurance purposes. If this product or material fails to perform in the accepted manner, the manufacturer will incur the expense of such testing and the AHJ may immediately revoke, modify, or suspend the use of such product or material within their jurisdiction. BORA reserves the right to revoke this acceptance, if it is determined by Miami-Dade County Product Control Division that this product or material fails to meet the requirements of the applicable building code.

This product is approved as described herein, and has been designed to comply with the High Velocity Hurricane Zone of the Florida Building Code.

DESCRIPTION: Extruded Aluminum Hinged Bi-Fold Colonial Shutter

APPROVAL DOCUMENT: Drawing No. 06-552, titled " Colonial Shutter ", sheets 1 through 4 of 4, prepared by Thornton Tomasetti, dated January 15, 2007, last revision #0 dated January 15, 2007, signed & sealed by J. W. Knezevich, P.E., bearing Miami-Dade County Product Control Revision stamp with the Notice of Acceptance number and expiration date by Miami-Dade County Product Control Division.

MISSILE IMPACT RATING: Large and Small Missile Impact

LABELING: Each unit shall bear a permanent label with the manufacturer's name or logo, city, state and the following statement: "Miami-Dade County Product Control Approved", unless otherwise noted herein.

RENEWAL of this NOA shall be considered after a renewal application has been filed and there has been no change in the applicable building code negatively affecting the performance of this product.

TERMINATION of this NOA will occur after the expiration date or if there has been a revision or change in the materials, use, and/or manufacture of the product or process. Misuse of this NOA as an endorsement of any product, for sales, advertising or any other purposes shall automatically terminate this NOA. Failure to comply with any section of this NOA shall be cause for termination and removal of NOA.

ADVERTISEMENT: The NOA number preceded by the words Miami-Dade County, Florida, and followed by the expiration date may be displayed in advertising literature. If any portion of the NOA is displayed, then it shall be done in its entirety.

INSPECTION: A copy of this entire NOA shall be provided to the user by the manufacturer or its distributors and shall be available for inspection at the job site at the request of the Building Official.
This NOA **revises NOA # 00-1114.01** and consists of this page 1, evidence submitted pages E-1 & E-2 as well as approval document mentioned above.
The submitted documentation was reviewed by **Helmy A. Makar, P.E., M.S.**

PRODUCT CONTROL ACCEPTED

Helmy A. Makar
03/08/2007

NOA No 06-1011.04
Expiration Date: 12/16/2007
Approval Date: 03/08/2007

Poma Corporation

NOTICE OF ACCEPTANCE: EVIDENCE SUBMITTED

1. EVIDENCE SUBMITTED UNDER PREVIOUS APPROVAL #95-0717.07

A. DRAWINGS

1. *Drawing No.* ***96-121****, Poma Corp. Colonial Shutter, Sheets 1 through 3 of 3, by Knezevich & Associates, Inc., dated 11/14/97, signed and sealed by V. J. Knezevich, P.E.*

B. TESTS

1. *Test Report on: 1) Large Missile Impact Test, per PA-201, 2) Cyclic Wind Pressure Test, per PA-203 and 3) Uniform Static Air Pressure test per PA-202, of colonial shutters with four sections and two horizontal bars, prepared by Hurricane Test Laboratory Inc., Report No.* ***0031-0316-95****, dated March 16, 1995, signed and sealed by Timothy S. Marshall, P.E.*

C. CALCULATIONS

1. *Anchor analysis and calculations dated 6/28/95, Pages 1 to 19, prepared by John M. Averkamp, Inc., signed and sealed by John M. Averkamp, P.E.*
2. *Anchor analysis and locking bar analysis, dated 5/28/96, Pages 1 to 8, prepared by Knezevich & Associates, Inc., signed and sealed by V. J. Knezevich, P.E.*

D. MATERIAL CERTIFICATION

1. *Certified Inspection Report including material certification by T & C Metals, for Alum. alloy 3003 H14 .050" thick sheet.*
2. *Certified Tensile Test Report No. 5GM-1726, for colonial shutter specimen, prepared by QC Metallurgical Inc., dated 7/27/95, per ASTM E8-93, signed and sealed by Frank Grate, P.E.*

2. EVIDENCE SUBMITTED UNDER PREVIOUS APPROVAL #98-0512.01

A. DRAWINGS

1. *Drawing prepared by Knezevich & Associates, Inc., titled "Colonial Shutter", Drawing No. 98-004, dated 05/08/98, last revision #2 dated 07/27/98, sheets 1 through 4 of 4, signed and sealed by V. J. Knezevich, P.E.*

B. TESTS

1. *Test report on Large Missile Impact Test of "Colonial Shutter", prepared by Construction Testing Corporation, Report No. 97-056, dated 10/23/97, signed and sealed by Yamile Kuri, P.E.*

C. CALCULATIONS

1. *Analysis and anchor calculations dated 05/11/98, pages 1 through 5 of 5, prepared by Knezevich & Associates, Inc. , signed and sealed by V. J. Knezevich, P.E.*

Hany A. Makar, P. E., M.S.
Product Control Examiner
NOA No 06-1011.04
Expiration Date: 12/16/2007
Approval Date: 03/08/2007

NOTICE OF ACCEPTANCE: EVIDENCE SUBMITTED

D. MATERIAL CERTIFICATIONS

1. *Tensile Test Report No. CTL-799C, prepared by Certified Testing Laboratories, dated 11/11/97, signed and sealed by Ramesh Patel, P.E.*

3. EVIDENCE SUBMITTED UNDER PREVIOUS APPROVAL #00-1114.01

A. DRAWINGS

1. *None.*

B. TESTS

1. *None.*

C. CALCULATIONS

1. *None.*

D. MATERIAL CERTIFICATIONS

1. *None.*

4. NEW EVIDENCE SUBMITTED

A. DRAWINGS

1. *Drawing No. 06-552, titled " Colonial Shutter ", sheets 1 through 4 of 4, prepared by Thornton Tomasetti, dated January 15, 2007, last revision #0 dated January 15, 2007, signed & sealed by J. W. Knezevich, P.E.*

B. TESTS

1. *None.*

C. CALCULATIONS

1. *Revised Anchor analysis and calculations dated January 04, 2007, 14 Pages, prepared by Thornton Tomasetti, signed and sealed by John W. Knezevich, P.E. on January 04, 2007.*

D. QUALITY ASSURANCE

1. *By Miami-Dade County Building Code Compliance Office.*

E. MATERIAL CERTIFICATIONS

1. *None.*

Helmy A. Makar, P. E., M.S.
Product Control Examiner
NOA No 06-1011.04
Expiration Date: 12/16/2007
Approval Date: 03/08/2007

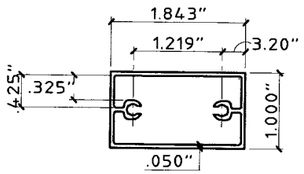

① **TOP & BOTTOM RAIL**
HALF SCALE

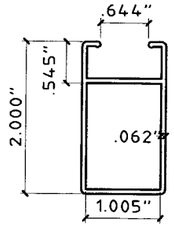

② **SIDE RAIL**
HALF SCALE

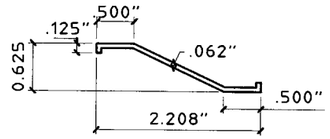

③ **LOUVER BLADE**
HALF SCALE

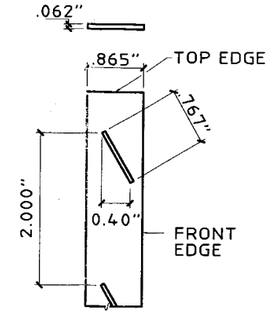

④ **LOUVER PLATE**
HALF SCALE

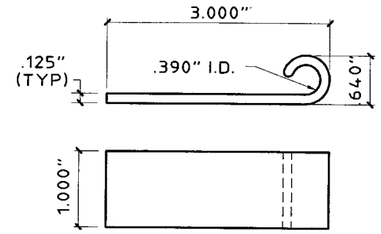

⑤ **"A" HINGE**
HALF SCALE

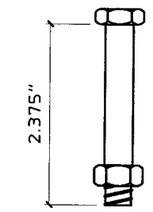

⑥ **HINGE PIN**
HALF SCALE
300 SERIES
STAINLESS STEEL
3/8"Φ HEX HEAD
BOLT W/ NUT

PRODUCT REVISED
as complying with the Florida
Building Code
Acceptance No. 06-1011.04
Expiration Date 12/16/2007
By Helena A. Melo
Miami Dade Product Control
Division

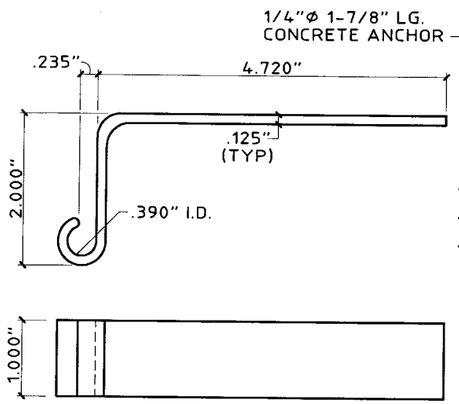

⑦ **"C" HINGE**
HALF SCALE

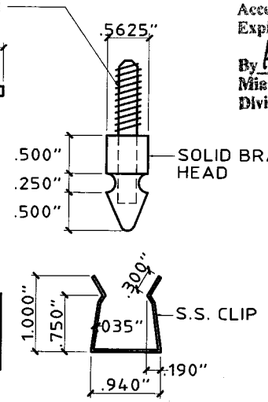

⑧ **BRASS CLIP-ON**
HALF SCALE

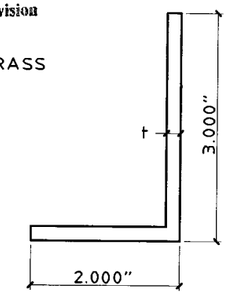

⑨ **LOCKING BAR**
REFERENCE LOCKING BAR SCHEDULE ON SHEET 3 OF 4 FOR ANGLE THICKNESS AND PROPER USE
HALF SCALE

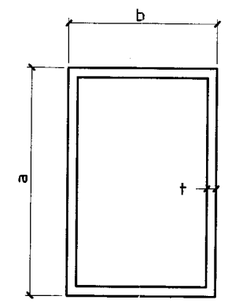

⑩ **LOCKING BAR**
REFERENCE LOCKING BAR SCHEDULE ON SHEET 3 OF 4 FOR THICKNESS AND PROPER USE
HALF SCALE

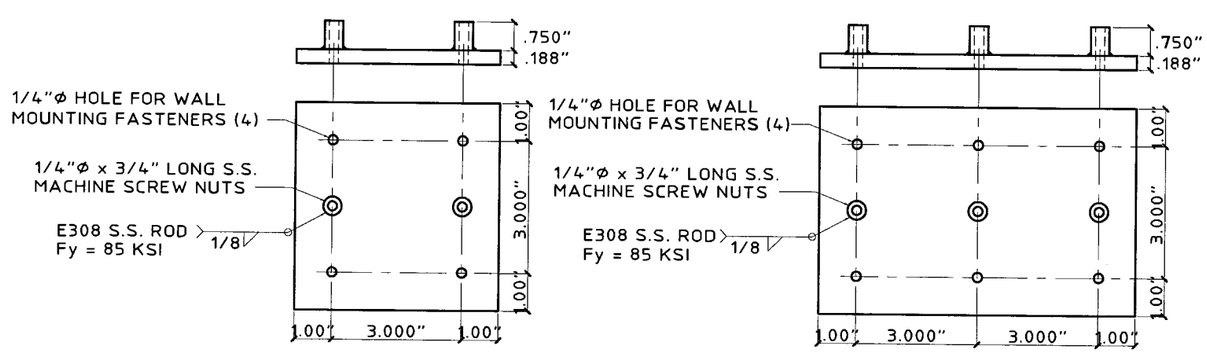

BRACKET A **BRACKET B**

⑪ **MOUNTING BRACKET**
304 STAINLESS STEEL
SCALE: 3" = 1'-0"

GENERAL NOTES:

1. THESE PRODUCT EVALUATION DOCUMENTS REPRESENT A SHUTTER SYSTEM ANALYZED WITH THE PROVISION SET FOR THE ISSUANCE OF A NOTICE OF ACCEPTANCE (NOA) BY MIAMI-DADE COUNTY PRODUCT CONTROL DIVISION FOR THE HIGH VELOCITY HURRICANE ZONE (HVHZ) OF THE FLORIDA BUILDING CODE 2004 WITH 2005 & 2006 SUPPLEMENT.
2. DETERMINE THE POSITIVE AND NEGATIVE DESIGN LOADS TO USE WHEN REFERENCING THESE DOCUMENTS IN ACCORDANCE WITH THE GOVERNING CODE AND GOVERNING WIND VELOCITY. FOR WIND LOAD CALCULATIONS IN ACCORDANCE WITH ASCE 7-02, A DIRECTIONALITY FACTOR OF Kd =0.85 SHALL BE USED.
3. THESE PRODUCT EVALUATION DOCUMENTS ARE GENERIC AND DO NOT INCLUDE INFORMATION FOR SITE-SPECIFIC APPLICATION OF THIS SHUTTER SYSTEM.
4. USE OF THESE PRODUCT EVALUATION DOCUMENTS SHALL COMPLY WITH CHAPTER 61G15-23 OF THE FLORIDA ADMINISTRATIVE CODE.
5. THESE PRODUCT EVALUATION DOCUMENTS ARE INTENDED FOR USE ONLY BY A LICENSED CONTRACTOR, PROFESSIONAL ENGINEER OR REGISTERED ARCHITECT AND ARE SUITABLE TO BE APPLIED BY THE CONTRACTOR PROVIDED THE CONTRACTOR DOES NOT DEVIATE FROM THE CONDITIONS DETAILED HEREIN AND THE CONTRACTOR VERIFIES THAT THE EXISTING STRUCTURE DOES NOT DEVIATE IN EITHER FORM OR MATERIAL FROM THE STRUCTURAL SUBSTRATES DETAILED HEREIN. CONTRACTOR SHALL VERIFY EXISTING STRUCTURE CAN WITHSTAND SUPERIMPOSED LOAD OF SHUTTER.
6. ANY MODIFICATIONS OR ADDITIONS TO THESE PRODUCT EVALUATION DOCUMENTS WILL VOID THE PRODUCT EVALUATION DOCUMENTS.
7. WHEN THE SITE CONDITIONS DEVIATE FROM THESE PRODUCT EVALUATION DOCUMENTS, THE BUILDING OFFICIAL MAY ELECT ONE OF THE FOLLOWING OPTIONS:
   A) REQUIRE THAT SITE SPECIFIC DOCUMENTS BE PREPARED, SIGNED, DATED AND SEALED BY A LICENSED ENGINEER OR REGISTERED ARCHITECT, WHICH DETAIL AND JUSTIFY THE DEVIATION. SAID DOCUMENTS SHALL BE SUBMITTED TO THE PRODUCT ENGINEER FOR REVIEW AS A CONDITION TO THE BUILDING OFFICIAL GRANTING HIS/HER APPROVAL.
   B) REQUIRE THAT A ONE-TIME SITE SPECIFIC APPROVAL BE APPLIED FOR AND SECURED FROM THE MIAMI-DADE COUNTY PRODUCT CONTROL DIVISION

   WHEN THE SITE CONDITION DEVIATIONS OCCUR WITHIN THE HIGH VELOCITY HURRICANE ZONE AREAS ONLY OPTION "B" SHALL BE ACCEPTED BY THE BUILDING OFFICIAL.
8. EACH SHUTTER ASSEMBLY SHALL BE PERMANENTLY LABELED AS FOLLOWS:
   POMA CORPORATION
   WEST PALM BEACH, FLORIDA
   MIAMI-DADE COUNTY PRODUCT CONTROL APPROVED
9. ALL EXTRUSIONS SHALL BE 6063-T6 ALUMINUM ALLOY, U.O.N.
10. ALL BOLTS AND WASHERS SHALL BE 300 SERIES STAINLESS STEEL. ALL POP RIVETS SHALL BE 3/16" DIAMETER 300 SERIES STAINLESS STEEL.
11. THE DETAILS AND SPECIFICATIONS SHOWN HEREIN REPRESENT THE PRODUCT TESTED FOR IMPACT, CYCLIC AND UNIFORM STATIC AIR PRESSURE IN CONFORMANCE WITH MIAMI-DADE COUNTY PROTOCOLS PA 201, 202, AND 203 WITH DESIGN WIND LOADS AS FOLLOWS:
    POSITIVE DESIGN LOAD: 48 PSF
    NEGATIVE DESIGN LOAD: 80 PSF
12. THIS SHUTTER SHALL BE PROVIDED WITH A PERMANENT LABEL INSTRUCTING THE OWNER OR TENANT TO CLOSE THE SHUTTER AND INSTALL STORM BARS TO ALL SIDE RAILS AND THE WALL PER MANUFACTURER'S INSTRUCTIONS DURING PERIODS OF TIME AS ARE DESIGNATED BY THE US WEATHER BUREAU AS BEING A HURRICANE WARNING OR ALERT.

Thornton Tomasetti
330 N. Andrews Ave., Suite 450 • Ft. Lauderdale, FL 33301
T 954.522.3690 • F 954.522.3691 • COA # 7519
Website: www.ThorntonTomasetti.com

Copyright © 2007 Thornton-Tomasetti, Inc.

COLONIAL SHUTTER

Poma Corporation
9040 Belvedere Road
West Palm Beach, FL 33411
Tel: (561) 790-5799 • Fax (561) 792-9281

J.W. Knezevich
Professional Engineer
FL License No.: PE 0041961

JAN 15 2007

revisions

no	date	by	description
0	01/15/2007	NW	PREVIOUSLY DRAWING NO. 98-004

date 01/15/2007	
scale AS NOTED	drawn by MCR
design by NW	checked by VJK
drawing no. 06-552	
sheet 1 of 4	

Print Information: P:\FL1\Projects\KK6552.00\Drawings\R0-sub\06-552-01.dwg MCantu 01/17/2007 12:24:13pm 01/08/07 11:16

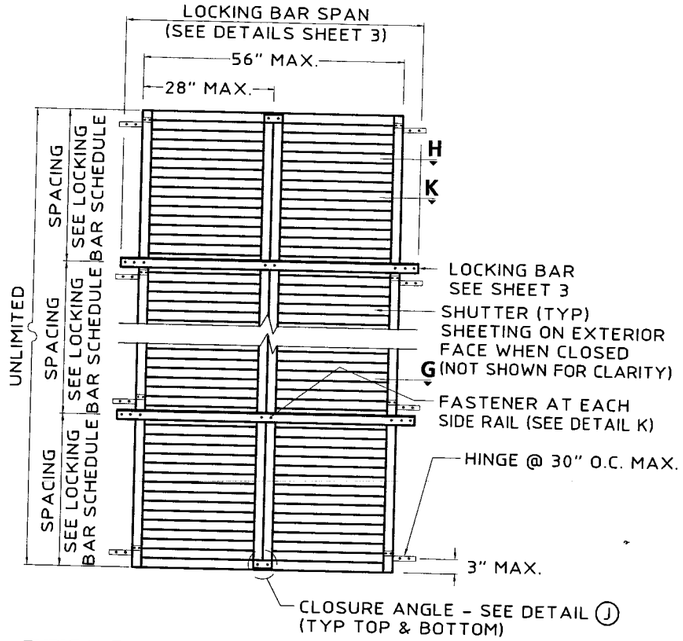

A TYPICAL ELEVATION (TWO PANEL UNIT)
SCALE : 3/8" = 1'-0"

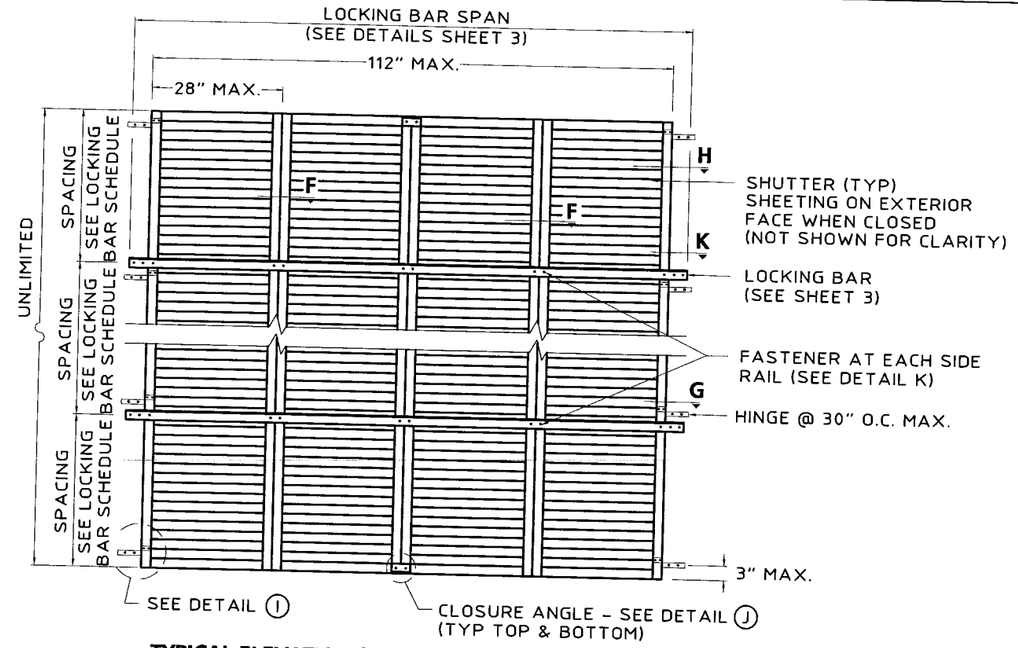

B TYPICAL ELEVATION (FOUR PANEL UNIT)
SCALE : 3/8" = 1'-0"

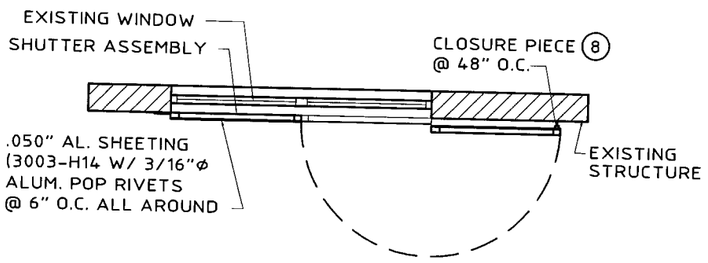

C TWO PANEL UNIT (PLAN VIEW)
SCALE : 3/8" = 1'-0"

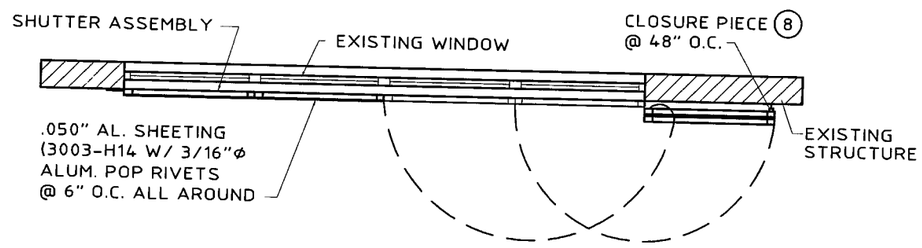

D FOUR PANEL UNIT (PLAN VIEW)
SCALE : 3/8" = 1'-0"

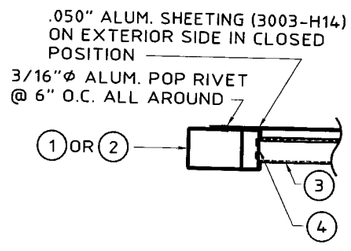

E SHEETING DETAIL
SCALE : 3" = 1'-0"

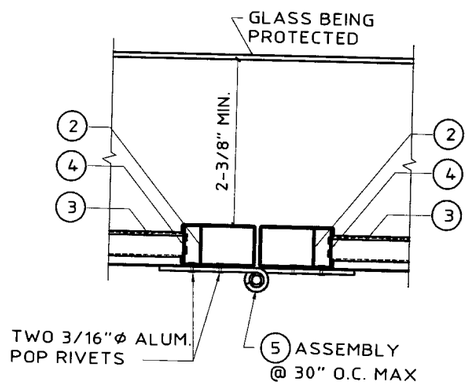

F "A" HINGE ASSEMBLY DETAIL
SCALE : 3" = 1'-0"

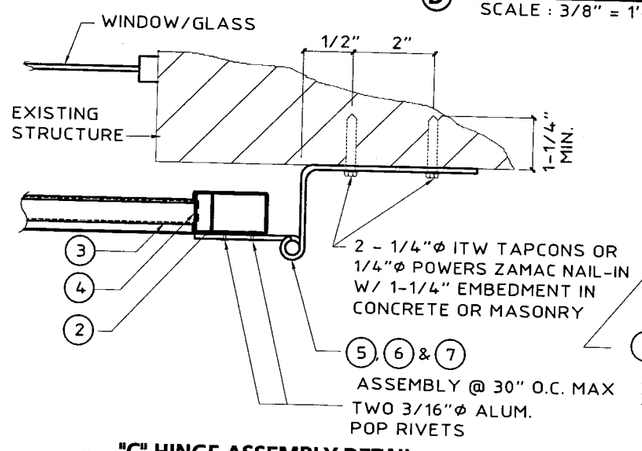

G "C" HINGE ASSEMBLY DETAIL
SCALE : 3" = 1'-0"

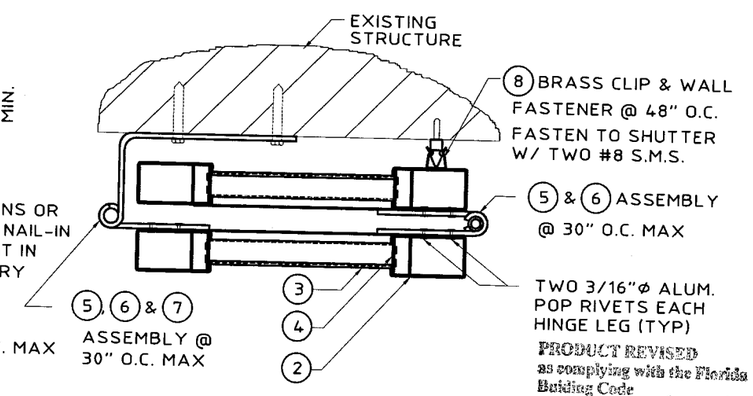

H DOUBLE UNIT HINGE ASSEMBLY DETAIL
SCALE : 3" = 1'-0"

PRODUCT REVISED
as complying with the Florida
Building Code
Acceptance No. 06-1011.04
Expiration Date 12/16/2007
By Helmy A. Mekhail
Miami Dade Product Control
Division

Thornton Tomasetti
330 N. Andrews Ave., Suite 450 • Ft. Lauderdale, FL 33301
T 954.522.3690 • F 954.522.3691 • COA # 7519
Website: www.ThorntonTomasetti.com

Copyright © 2007 Thornton-Tomasetti, Inc.

COLONIAL SHUTTER

Poma Corporation
9040 Belvedere Road
West Palm Beach, FL 33411
Tel: (561) 790-5799 • Fax (561) 792-9281

J.W. Knezevich
Professional Engineer
FL License No.: PE 0041961

JAN 15 2007

revisions			
no	date	by	description
0	01/15/2007	NW	PREVIOUSLY DRAWING NO. 98-004

date 01/15/2007	
scale AS NOTED	drawn by MCR
design by NW	checked by VJK
drawing no. 06-552	
sheet 2 of 4	

Print Information: P:\FL1\Projects\KK6552.00\Drawings\R0-sub\06-552-02.dwg MCantu 01/16/2007 10:18:09am 01/05/07 10:07

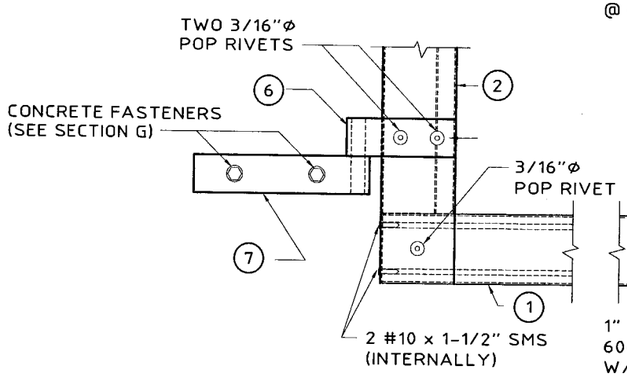

(I) TYPICAL SIDE RAIL TO TOP & BOTTOM RAIL CONNECTION

SCALE : 3" = 1'-0"

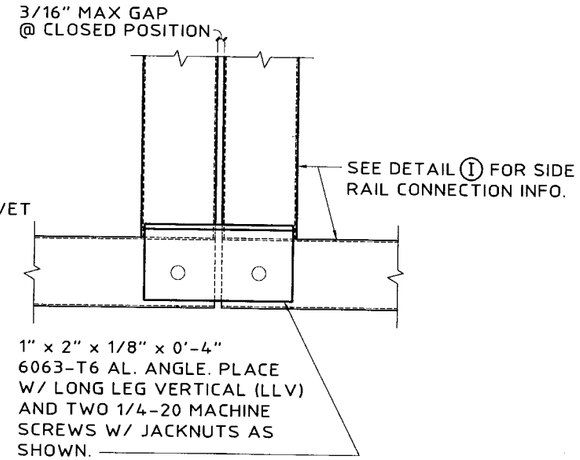

(J) CLOSURE ANGLE (TYPICAL TOP & BOTTOM AT CENTER JOINT)

SCALE : 3" = 1'-0"

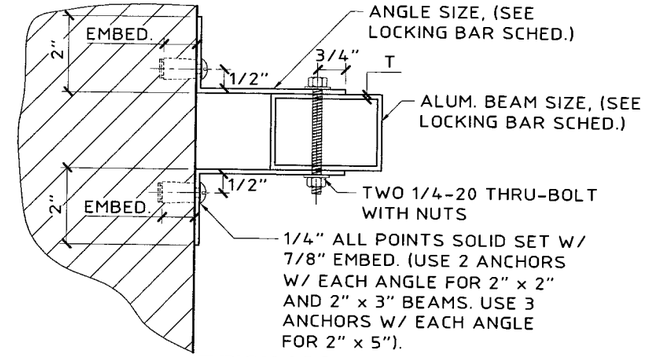

(L) TYPICAL LOCKING BAR W/ CLIP ANGLES DETAIL

SCALE : 3" = 1'-0"

LOCKING BAR SCHEDULE

TYPE	MAX. SPACING	MAX. SPAN	COMMENTS	CONNECTION OPTIONS	
				BRACKET	DOUBLE ANGLES
2" x 3" x 1/4" AL. ANGLE (6061-T6)	32"	51"	3" LEG HORIZONTAL	BRACKET (11A)	N / A
2" x 2" x 1/8" AL. TUBE (6061-T6)	32"	64"	—	BRACKET (11B)	2" x 3" x 1/8" x 0'-5"
2" x 3" x 1/8" AL. TUBE (6061-T6)	32"	82"	3" SIDE HORIZONTAL	BRACKET (11B)	2" x 4" x 1/8" x 0'-7"
2" x 5" x 1/8" AL. TUBE (6061-T6)	32"	117"	5" SIDE HORIZONTAL	BRACKET (11B)	2" x 5" x 1/8" x 0'-9"

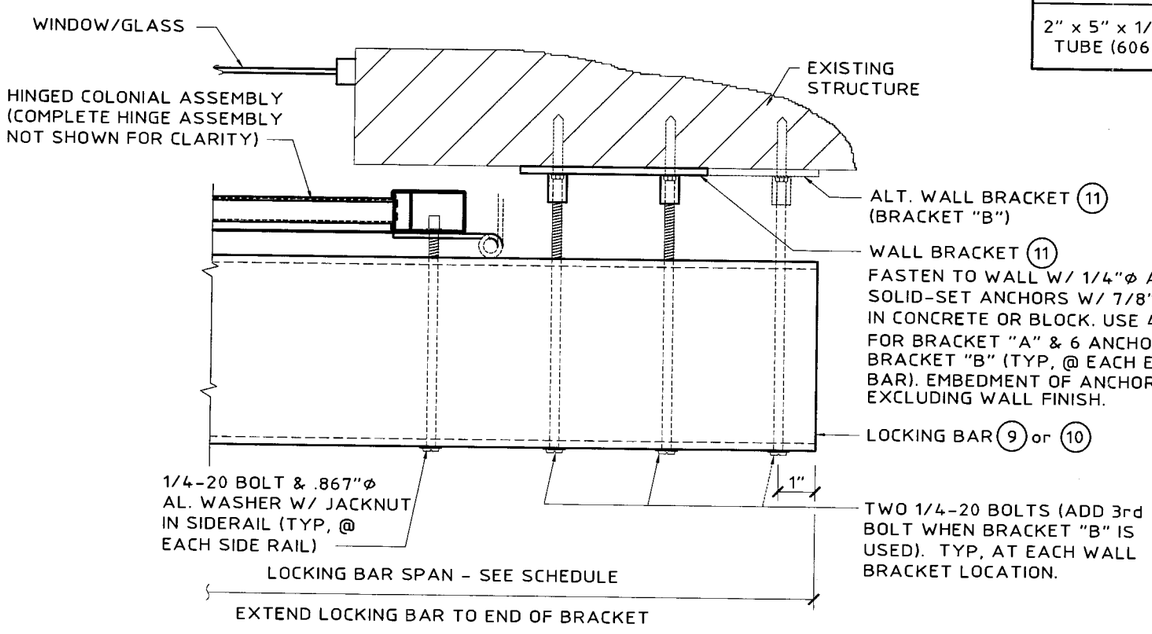

(K) TYPICAL LOCKING BAR TO MOUNTING BRACKET DETAIL

SCALE : 3" = 1'-0"

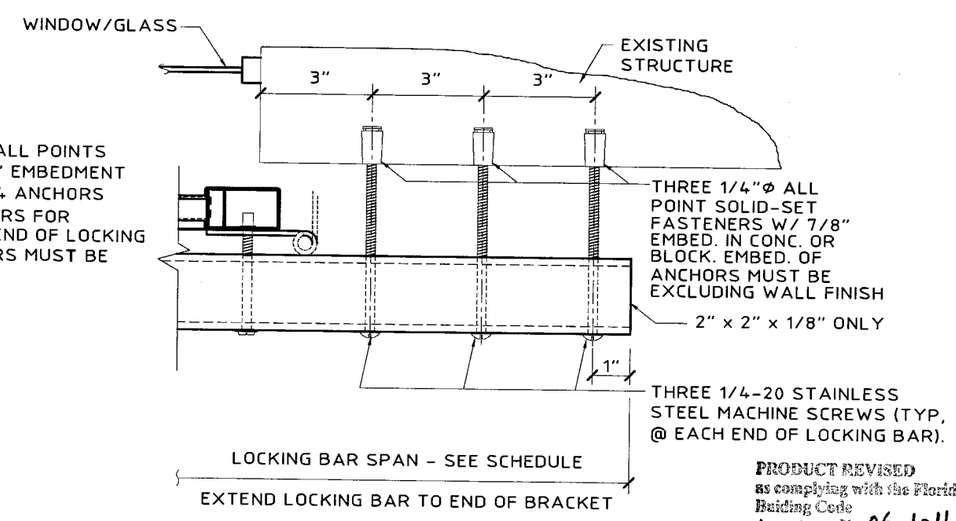

(M) OPTIONAL 2" x 2" x 1/8" LOCKING BAR CONNECTION DETAIL

SCALE : 3" = 1'-0"

PRODUCT REVISED
as complying with the Florida
Building Code
Acceptance No. 06-1011.04
Expiration Date 12/16/2007
By Helena Albo
Miami Dade Product Control
Division

Thornton Tomasetti
330 N. Andrews Ave., Suite 450 • Ft. Lauderdale, FL 33301
T 954.522.3690 • F 954.522.3691 • COA # 7519
Website: www.ThorntonTomasetti.com

Copyright © 2007 Thornton-Tomasetti, Inc.

COLONIAL SHUTTER

Poma Corporation
9040 Belvedere Road
West Palm Beach, FL 33411
Tel: (561) 790-5799 • Fax (561) 792-9281

J.W. Knezevich
Professional Engineer
FL License No.: PE 0041961

JAN 15 2007

revisions

no	date	by	description
0	01/15/2007	NW	PREVIOUSLY DRAWING NO. 98-004

date	01/15/2007
scale	AS NOTED
drawn by	MCR
design by	NW
checked by	VJK
drawing no.	06-552
sheet	3 of 4

Print Information: P:\FL1\Projects\KK6552.00\Drawings\R0-sub\06-552-03.dwg MCantu 01/16/2007 10:18:15am 01/08/07 11:16

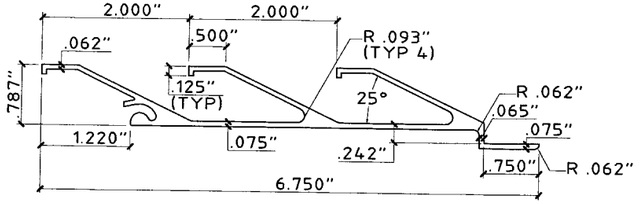

IMPACT RESISTANT
(12) STARTER BLADE
SCALE: HALF SIZE

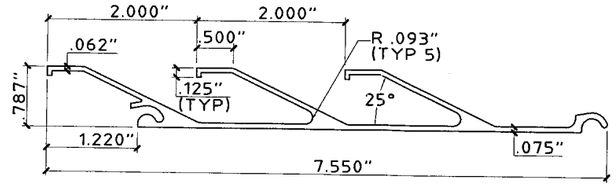

IMPACT RESISTANT
(13) STANDARD 3 LOUVER BLADE
SCALE: HALF SIZE

NOTE:

1. IMPACT RESISTANT LOUVER BLADE COMPONENTS MAY BE USED IN LIEU OF THE LOUVER BLADE PIECE (3), THE LOUVER PLATE PIECE (4), AND THE CONT. 0.050" ALUM. SHEETING SPECIFIED IN DETAIL (E).

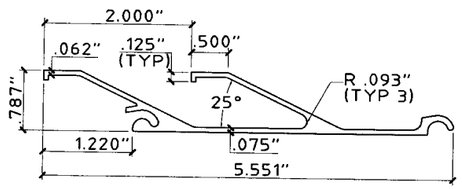

IMPACT RESISTANT
(14) STANDARD 2 LOUVER BLADE
SCALE: HALF SIZE

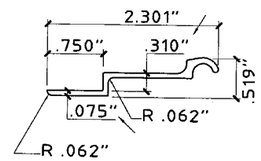

IMPACT RESISTANT
(15) CLOSURE STRIP
SCALE: HALF SIZE

ALTERNATE IMPACT RESISTANT LOUVER BLADE COMPONENTS

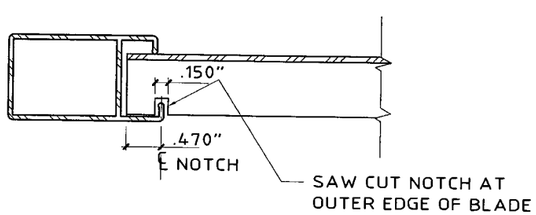

IMPACT RESISTANT
LOUVER TO SIDE RAIL DETAIL
SCALE: HALF SIZE

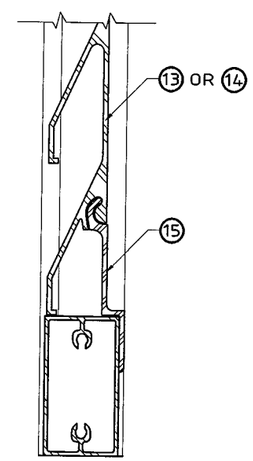

IMPACT RESISTANT
LOUVER TO BOTTOM RAIL DETAIL
SCALE: HALF SIZE

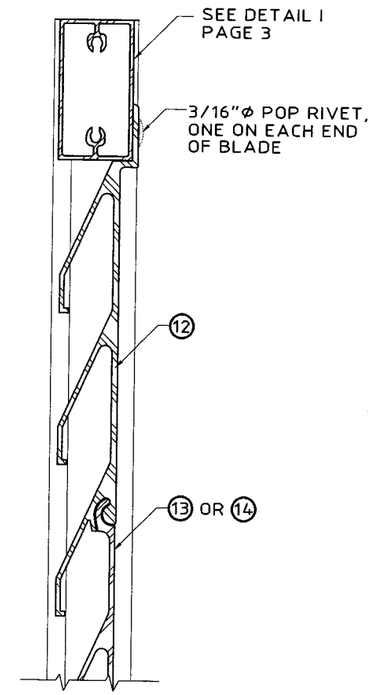

IMPACT RESISTANT
LOUVER TO TOP RAIL DETAIL
SCALE: HALF SIZE

PRODUCT REVISED
as complying with the Florida
Building Code
Acceptance No. 06-1011.04
Expiration Date 12/16/2007
By Helena A. Alter
Miami Dade Product Control
Division

Thornton Tomasetti
330 N. Andrews Ave., Suite 450 • Ft. Lauderdale, FL 33301
T 954.522.3690 • F 954.522.3691 • COA # 7519
Website: www.ThorntonTomasetti.com

Copyright © 2007 Thornton-Tomasetti, Inc.

COLONIAL SHUTTER

Poma Corporation
9040 Belvedere Road
West Palm Beach, FL 33411
Tel: (561) 790-5799 • Fax (561) 792-9281

J.W. Knezevich
Professional Engineer
FL License No.: PE 0041961

JAN 15 2007

revisions

no	date	by	description
0	01/15/2007	NW	PREVIOUSLY DRAWING NO. 98-004

date 01/15/2007
scale AS NOTED
drawn by MCR
design by NW
checked by VJK
drawing no. 06-552
sheet 4 of 4

Print Information: P:\FL1\Projects\KK6552.00\Drawings\R0-sub\06-552-04.dwg MCantu 01/16/2007 10:18:20am 01/05/07 10:18