MIAMI-DADE COUNTY

BUILDING CODE COMPLIANCE OFFICE (BCCO)
PRODUCT CONTROL DIVISION

MIAMI-DADE COUNTY, FLORIDA
METRO-DADE FLAGLER BUILDING
140 WEST FLAGLER STREET, SUITE 1603
MIAMI, FLORIDA 33130-1563
(305) 375-2901 FAX (305) 375-2908
www.buldingcodeonline.com

NOTICE OF ACCEPTANCE (NOA)

Jeld-Wen, Inc.
3737 Lakeport Blvd.
Klamath Falls, OR 97601

SCOPE:

This NOA is being issued under the applicable rules and regulations governing the use of construction materials. The documentation submitted has been reviewed by Miami-Dade County Product Control Division and accepted by the Board of Rules and Appeals (BORA) to be used in Miami Dade County and other areas where allowed by the Authority Having Jurisdiction (AHJ).

This NOA shall not be valid after the expiration date stated below. The Miami-Dade County Product Control Division (In Miami Dade County) and/or the AHJ (in areas other than Miami Dade County) reserve the right to have this product or material tested for quality assurance purposes. If this product or material fails to perform in the accepted manner, the manufacturer will incur the expense of such testing and the AHJ may immediately revoke, modify, or suspend the use of such product or material within their jurisdiction. BORA reserves the right to revoke this acceptance, if it is determined by Miami-Dade County Product Control Division that this product or material fails to meet the requirements of the applicable building code.

This product is approved as described herein, and has been designed to comply with the Florida Building Code, including the High Velocity Hurricane Zone.

DESCRIPTION: Series 4500 Aluminum Sliding Glass Door

APPROVAL DOCUMENT: Drawing No. **JELD0036**, titled "4500 Series Sliding Glass Door", sheets 1 through 8 of 8, dated 07/21/06 with revision A dated 10/17/06, prepared by PTC, LLC, signed and sealed by Luis R. Lomas, P.E., bearing the Miami-Dade County Product Control Revision stamp with the Notice of Acceptance number and expiration date by the Miami-Dade County Product Control Division.

MISSILE IMPACT RATING: None

LABELING: Each unit shall bear a permanent label with the manufacturer's name: **Jeld-Wen, Inc. 355 Center Court, Venice, FL 34285** and following statement: "Miami-Dade County Product Control Approved", unless otherwise noted herein.

RENEWAL of this NOA shall be considered after a renewal application has been filed and there has been no change in the applicable building code negatively affecting the performance of this product.

TERMINATION of this NOA will occur after the expiration date or if there has been a revision or change in the materials, use, and/or manufacture of the product or process. Misuse of this NOA as an endorsement of any product, for sales, advertising or any other purposes shall automatically terminate this NOA. Failure to comply with any section of this NOA shall be cause for termination and removal of NOA.

ADVERTISEMENT: The NOA number preceded by the words Miami-Dade County, Florida, and followed by the expiration date may be displayed in advertising literature. If any portion of the NOA is displayed, then it shall be done in its entirety.

INSPECTION: A copy of this entire NOA shall be provided to the user by the manufacturer or its distributors and shall be available for inspection at the job site at the request of the Building Official.

This NOA **revises and renews NOA # 01-0926.01** and consists of this page 1 and evidence page E-1, as well as approval document mentioned above.

The submitted documentation was reviewed by **Manuel Perez, P.E.**

PRODUCT CONTROL ACCEPTED

NOA No: 06-1012.01
Expiration Date: November 5, 2007
Approval Date: November 9, 2006

Jeld-Wen, Inc.

NOTICE OF ACCEPTANCE: EVIDENCE SUBMITTED

A. DRAWINGS

1. Manufacturer's die drawings and sections.
2. Drawing No **JELD0036**, Sheets 1 through 7 of 7, titled "4500 Series Sliding Glass Door", dated 07/21/06 with revision A dated 10/11/06, prepared by PTC, LLC, signed and sealed by Luis R. Lomas, P.E.

B. TESTS

1. Test reports on 1) Air Infiltration Test, per PA 202-94
   2) Uniform Static Air Pressure Test, Loading per PA 202-94
   3) Water Resistance Test, per PA 202-94
   4) Forced Entry Test, per SFBC 3603.2 (b) and PA 202-94

   along with marked-up drawings and installation diagram of an aluminum sliding glass door, prepared by National Certified Testing Laboratories, Test Report No. **NCTL-210-1925-1,2,3(S)(F) (HD- reinforcement)**, dated 04-15-97, **NCTL-210-1946-11, 12,13(S)(F) (MD- reinforcement)**, dated 06-23-97 **NCTL-210-1946-14,15,16(S)(F) (LD-reinforcement)**, dated 06-23-97, signed and sealed by Barry Portnoy, P.E.

C. CALCULATIONS

1. Anchor verification calculations and structural analysis, complying with FBC-2004, prepared by PTC, LLC, dated 5/23/06 and revised on 10/17/06, signed and sealed by Luis R. Lomas, P.E.
   Complies with ASTM E1300-98

D. QUALITY ASSURANCE

1. Miami Dade Building Code Compliance Office (BCCO).

E. MATERIAL CERTIFICATIONS

1. None.

F. STATEMENTS

1. Statement letter of conformance and of no financial interest, dated October 11, 2006, signed and sealed by Luis R. Lomas, P.E.
2. Laboratory confirmation of test contract letter by National Certified Testing Laboratories, signed by Christopher Bennett, Division Manager.

G. OTHER

1. Notice of Acceptance No. **01-0926.01**, issued to Seasonshield, Inc. for their Series 4500 Aluminum Sliding Glass Door, approved on 11/29/01 and expiring on 11/05/06.

Manuel Perez

Manuel Perez, P.E.
Product Control Examiner
NOA No: 06-1012.01
Expiration Date: November 5, 2007
Approval Date: November 9, 2006

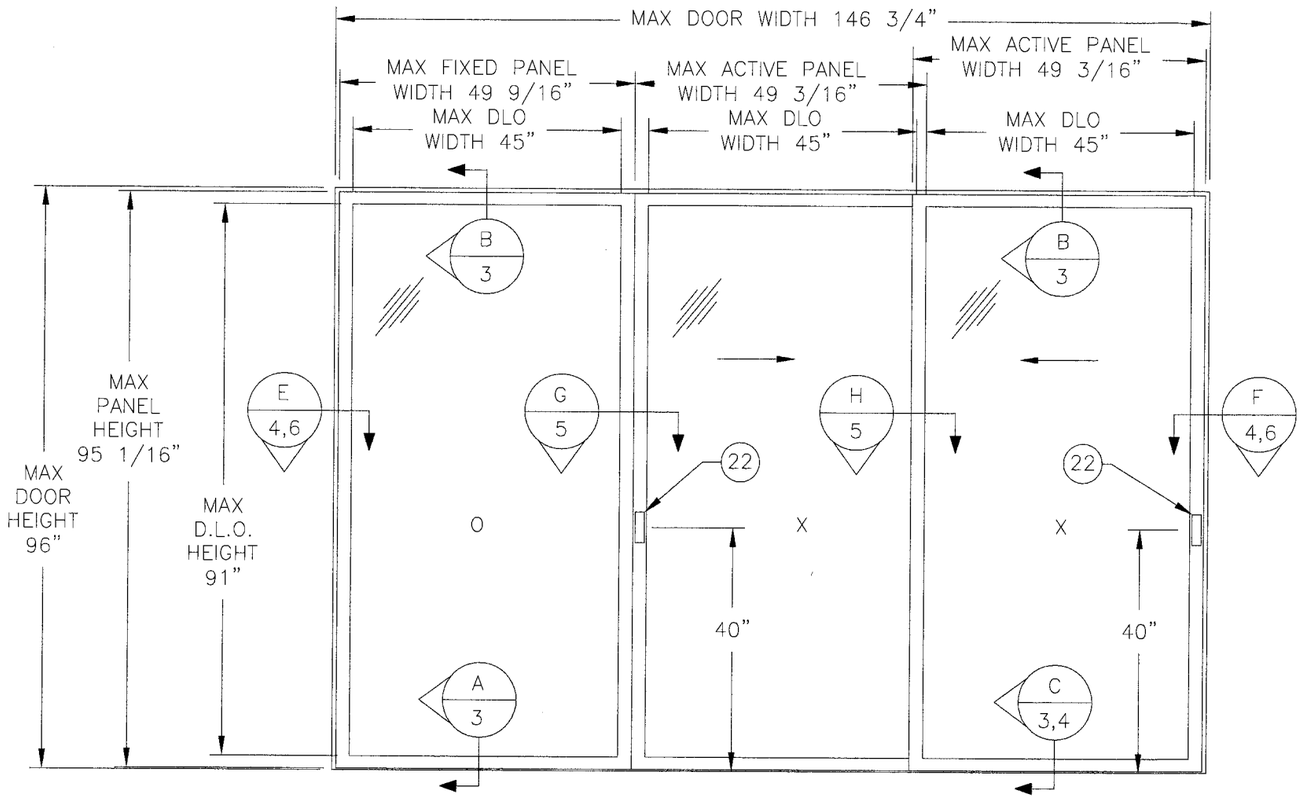

EXTERIOR ELEVATION

DESIGN PRESSURE RATINGS - PSF (PANELS WITH 3/16" TEMPERED GLASS)							
PANEL SIZES ARE NOMINAL							
PANEL WIDTH	DOOR HEIGHT	LIGHT REINFORCEMENT		MEDIUM REINFORCEMENT		HEAVY REINFORCEMENT	
		EXT. (+)	INT. (-)	EXT. (+)	INT. (-)	EXT. (+)	INT. (-)
30"	72" (6)	30.0	60.6	55.0	111.2	70.0	131.4
36"		30.0	53.3	55.0	97.8	70.0	115.6
42"		30.0	48.4	55.0	88.7	70.0	104.9
48"		30.0	45.0	55.0	82.5	70.0	97.5
30"	80" (6)	30.0	53.2	55.0	97.5	70.0	115.2
36"		30.0	46.5	55.0	85.2	70.0	100.6
42"		30.0	41.8	55.0	76.7	70.0	90.7
48"		30.0	38.6	55.0	70.7	70.0	83.6
30"	96" (7)	30.0	42.7	55.0	78.2	70.0	92.4
36"		30.0	36.9	55.0	67.7	70.0	80.0
42"		30.0	32.9	55.0	60.3	70.0	71.3
48"		30.0	30.0	55.0	55.0	65.0	65.0
		SILL HEIGHT 1 1/8" WITH NO SILL RISER		SILL HEIGHT WITH 2" SILL RISER		SILL HEIGHT WITH 3" SILL RISER	

( ) NUMBER OF PAIR OF ANCHORS IN JAMBS IN PARENTHESIS

NOTE:

1) THE PRODUCT SHOWN HEREIN IS DESIGNED AND MANUFACTURED TO COMPLY WITH THE 2004 FLORIDA BUILDING CODE, INCLUDING THE HVHZ
2) 2X FRAME, MASONRY OPENING & 1X BUCK TO BE DESIGNED AND ANCHORED TO PROPERLY TRANSFER ALL LOADS TO STRUCTURE. 2X FRAME, MASONRY OPENING & 1X BUCK IS THE RESPONSIBILITY OF THE ARCHITECT OR ENGINEER OF RECORD.
3) APPROVED IMPACT PROTECTIVE SYSTEM IS REQUIRED ON THIS PRODUCT IN AREAS REQUIRING IMPACT PROTECTION.

TABLE OF CONTENTS

SHEET #	DESCRIPTION
1	ELEVATION
2	ANCHORING
3	VERTICAL INSTALLATION DETAILS
4	HORIZONTAL & VERTICAL INSTALLATION DETAILS
5 & 6	HORIZONTAL INSTALLATION DETAILS
7	BILL OF MATERIALS & GLAZING DETAIL
8	COMPONENTS

PRODUCT REVISED
as complying with the Florida Building Code
Acceptance No. 06-1012.01
Expiration Date Nov. 5, 2007
By Manuel Perez
Miami-Dade Product Control Division

SYM	REVISION	DATE	BY
A	PER MIAMI DADE MARKUPS 10/15/06	10/17/06	BB

L. Roberto Lomas
P.E. No. 62514
10/17/06
PTC, LLC
1535 Cogswell Street, Suite C25
Rockledge, Florida 32955
FBPE Certificate of Authorization NO. 25935

JELD-WEN
355 CENTER COURT - VENICE, FLORIDA 34285

TITLE: 4500 SERIES SLIDING GLASS DOOR ELEVATION AND NOTES

PREPARED BY: PTC, LLC
Phone 321.690.1788 Fax 321.690.1789

DRN:	DATE:
BB	7/21/06
SCALE: NTS	DWG. NO: JELD0036
REV: A	SHEET: 1 OF 8

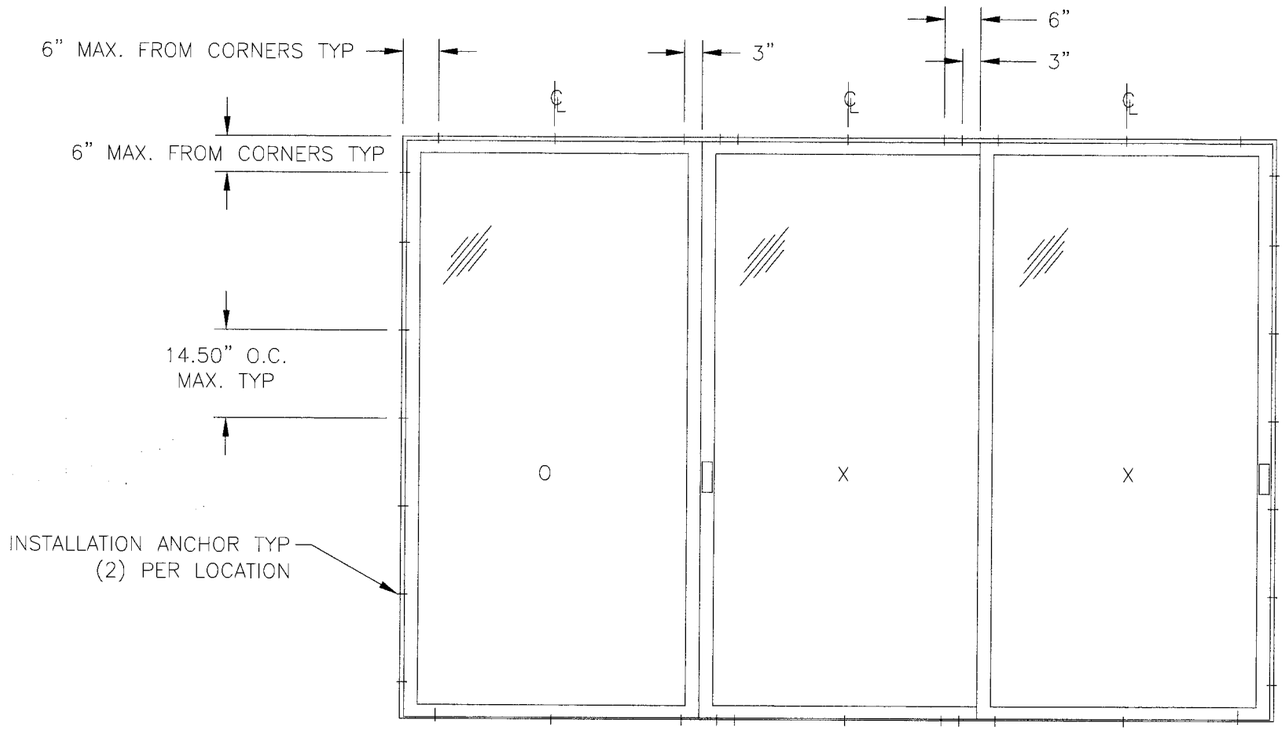

EXTERIOR ANCHOR ELEVATION

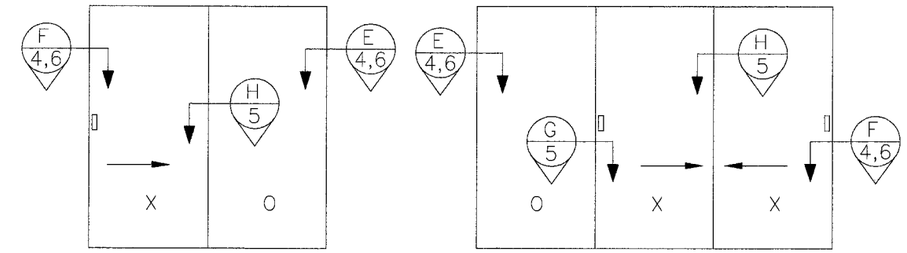

XO SHOWN
OX CONFIGURATION
ALSO APPROVED

OXX CONFIGURATION

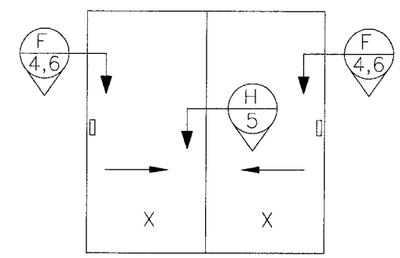

XX CONFIGURATION

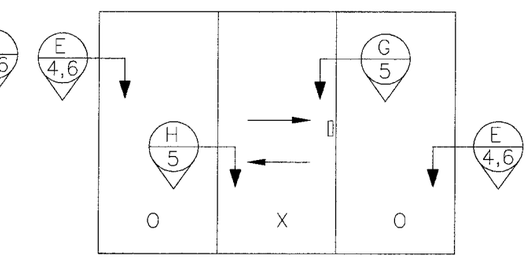

OXO CONFIGURATION

INSTALLATION NOTES:

1. SHIM AS REQUIRED AT EACH SET OF INSTALLATION ANCHORS USING LOAD BEARING SHIMS. MAXIMUM ALLOWABLE SHIM STACK TO BE 1/4". USE SHIMS WHERE SPACE GREATER THAN 1/16" IS PRESENT.
2. TWO (2) ANCHORS ARE REQUIRED AT EACH ANCHOR LOCATION SHOWN.
3. SEE ANCHOR ELEVATION FOR LOCATION OF ANCHORS
4. INSTALLATION ON 1X BUCK TO MASONRY, USE 3/16" DIAMETER TAPCON OF SUFFICIENT LENGTH TO ACHIEVE A 1 1/4" MINIMUM EMBEDMENT.
5. INSTALLATION ON 2X FRAMING, USE #12 SHEET METAL SCREWS OF SUFFICIENT LENGTH TO ACHIEVE A 1 1/2" MINIMUM EMBEDMENT.

SYM	REVISION	DATE	BY
A	PER MIAMI DADE MARKUPS 10/15/06	10/17/06	BB

PRODUCT REVISED
as complying with the Florida
Building Code
Acceptance No. 06-1012.01
Expiration Date NOV. 5, 2007
By Manuel Perez
Miami-Dade Product Control
Division

L. Roberto Lomas
P.E. No. 62514
10/17/06
PTC, LLC
1535 Cogswell Street, Suite C25
Rockledge, Florida 32955
FBPE Certificate of Authorization NO. 25935

JELD-WEN
355 CENTER COURT – VENICE, FLORIDA 34285

TITLE: 4500 SERIES SLIDING GLASS DOOR ANCHORING AND NOTES

PREPARED BY: PTC, LLC
Phone 321.690.1788 Fax 321.690.1789

DRN: BB	DATE: 7/21/06
SCALE: NTS	DWG. NO: JELD0036
REV: A	SHEET: 2 OF 8

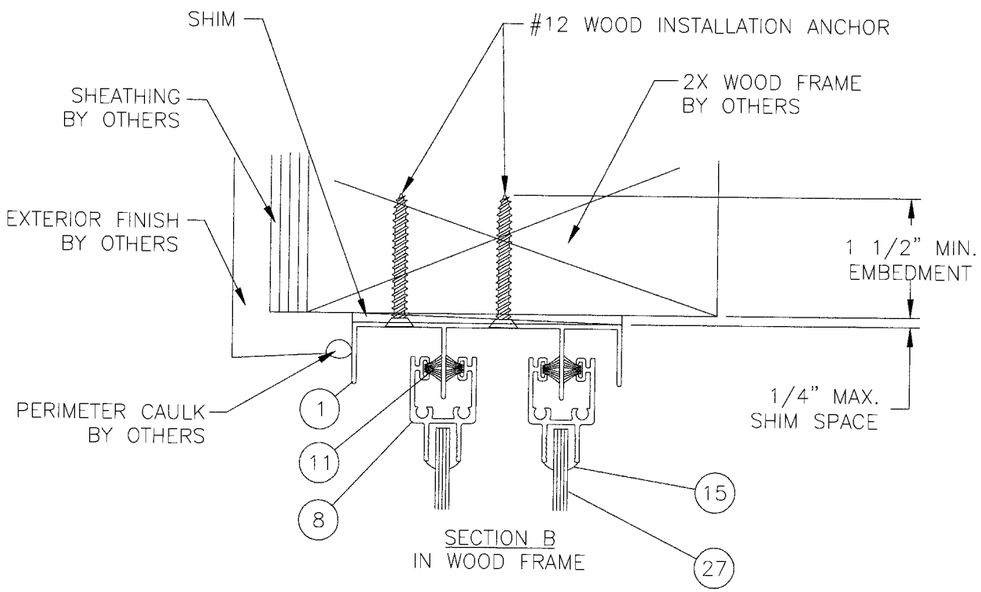

SECTION B
IN WOOD FRAME

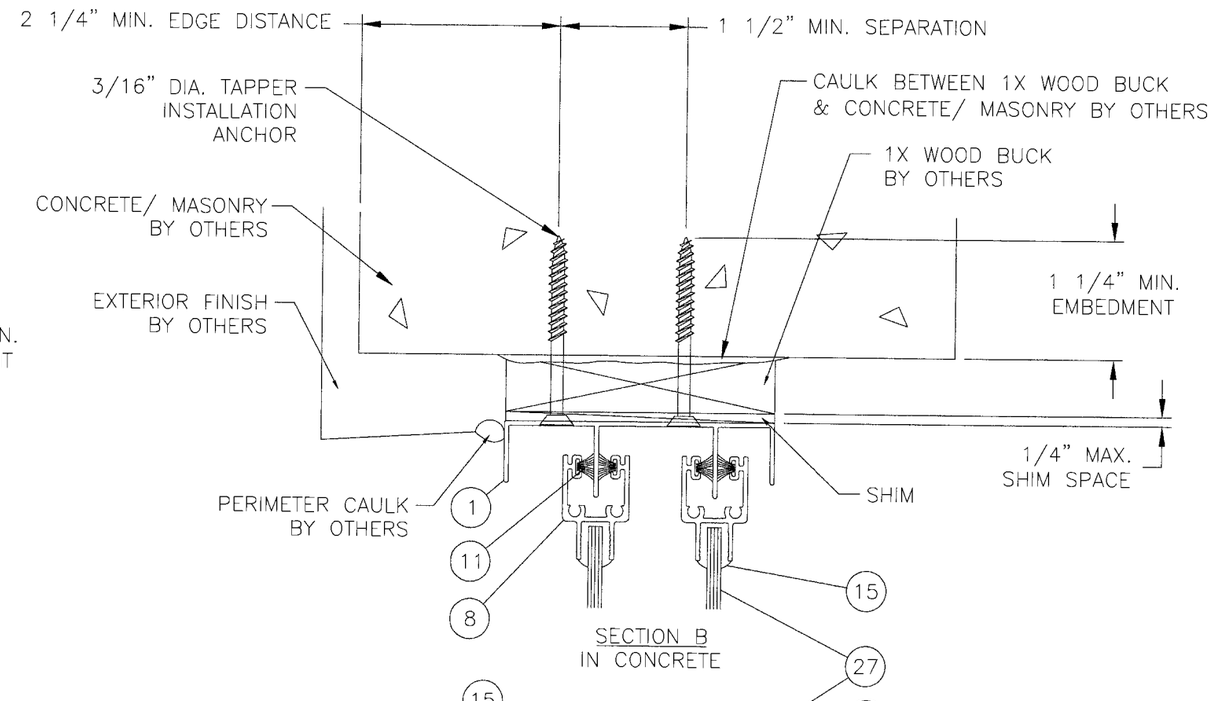

SECTION B
IN CONCRETE

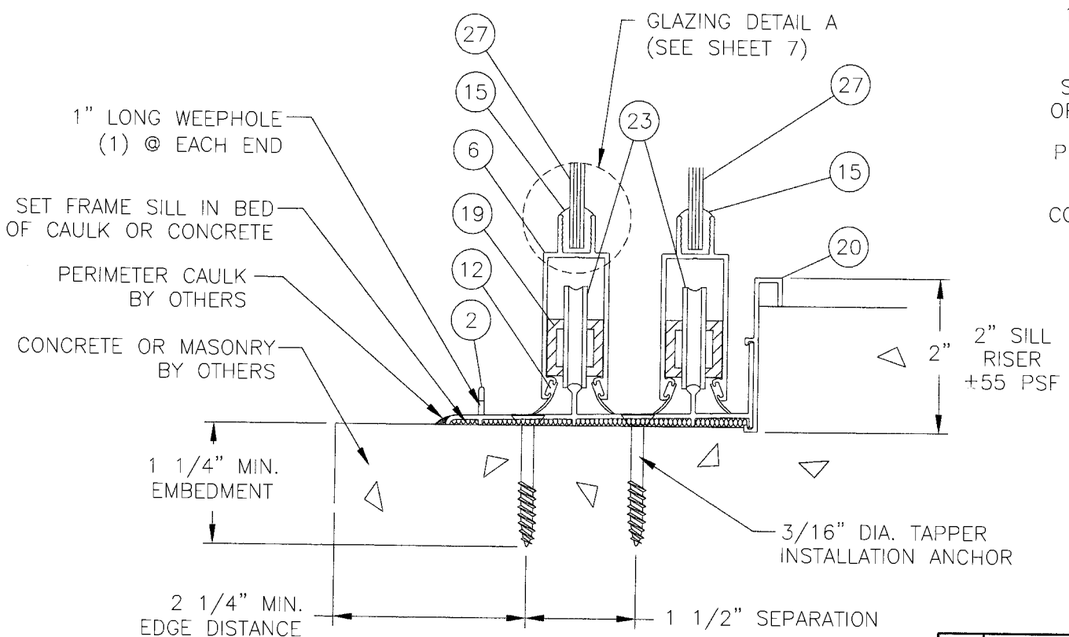

SECTION C

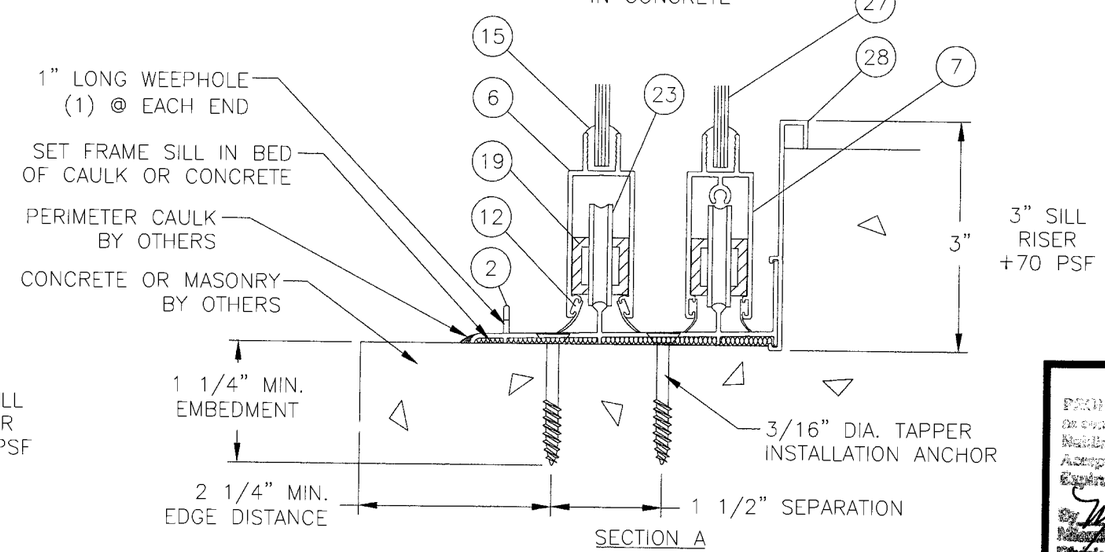

SECTION A

PRODUCT REVISED
as complying with the Florida Building Code
Acceptance No. 06-1012.01
Expiration Date: Nov. 5, 2007
By: Manuel Perez
Miami Dade Product Control Division

SYM	REVISION	DATE	BY
A	PER MIAMI DADE MARKUPS 10/15/06	10/17/06	BB

L. Roberto Lomas
P.E. No. 62514
10/17/06
PTC, LLC
1535 Cogswell Street, Suite C25
Rockledge, Florida 32955
FBPE Certificate of Authorization NO. 25935

JELD-WEN
355 CENTER COURT – VENICE, FLORIDA 34285

TITLE: 4500 SERIES SLIDING GLASS DOOR VERTICAL INSTALLATION DETAILS

PREPARED BY: PTC, LLC
Phone 321.690.1788 Fax 321.690.1789

DRN: BB	DATE: 7/21/06
SCALE: NTS	DWG. NO: JELD0036
REV: A	SHEET: 3 OF 8

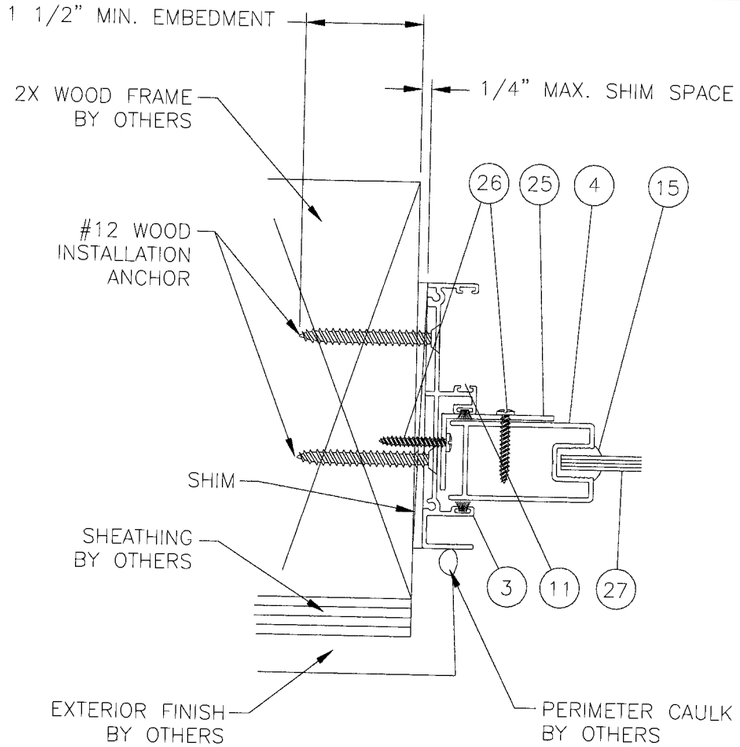

SECTION E
IN WOOD FRAME

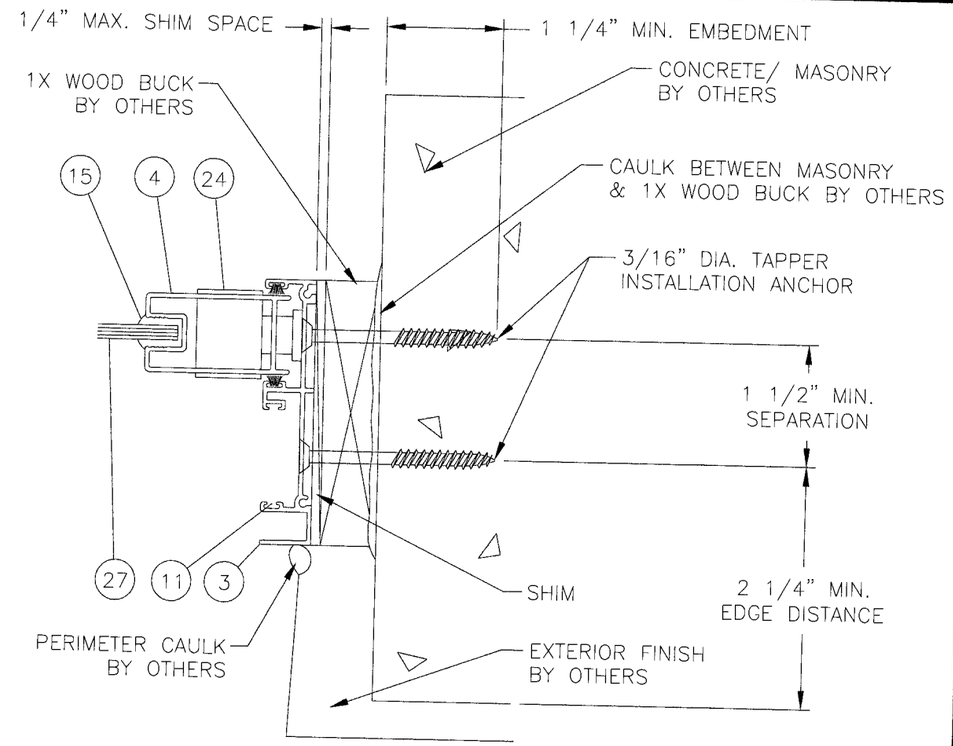

SECTION F
IN CONCRETE

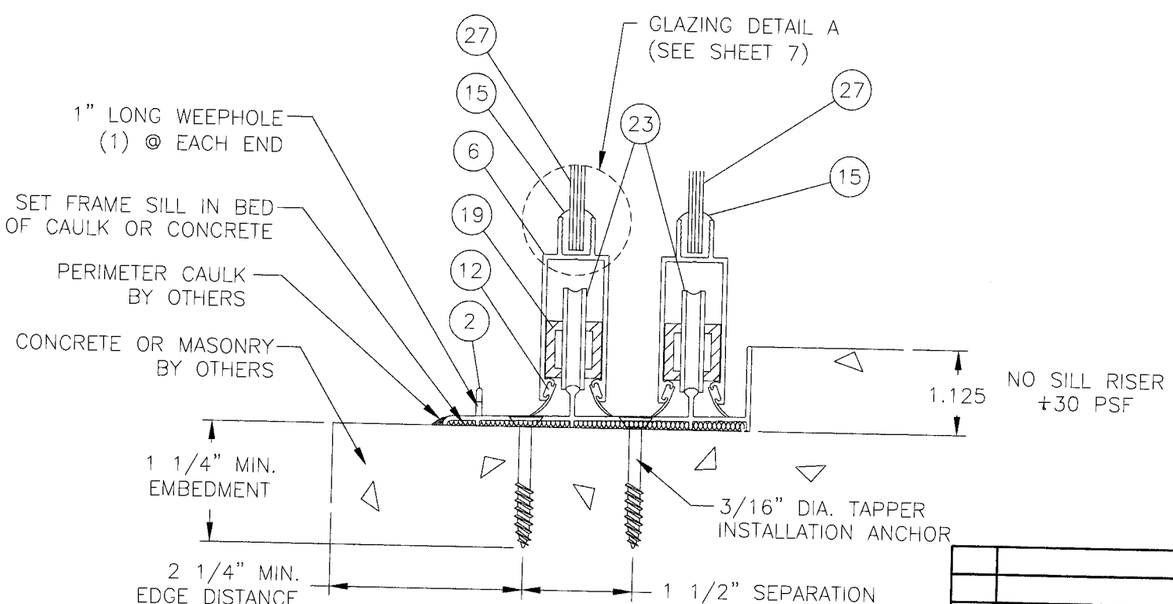

SECTION C

PRODUCT REVISED
in complying with the Florida Building Code
Acceptance No. 06-1017.01
Expiration Date NOV 5 2007
By Manuel Perez
Miami Dade Product Control Division

SYM	REVISION	DATE	BY
A	PER MIAMI DADE MARKUPS 10/15/06	10/17/06	BB

L. Roberto Lomas
P.E. No. 62514
10/17/06
PTC, LLC
1535 Cogswell Street, Suite C25
Rockledge, Florida 32955
FBPE Certificate of Authorization NO. 25935

JELD-WEN
355 CENTER COURT – VENICE, FLORIDA 34285

TITLE: 4500 SERIES SLIDING GLASS DOOR
VERTICAL & HORIZONTAL INSTALLATION DETAILS

PREPARED BY: PTC, LLC
Phone 321.690.1788 Fax 321.690.1789

DRN: BB	DATE: 7/21/06
SCALE: NTS	DWG. NO: JELD0036
REV: A	SHEET: 4 OF 8

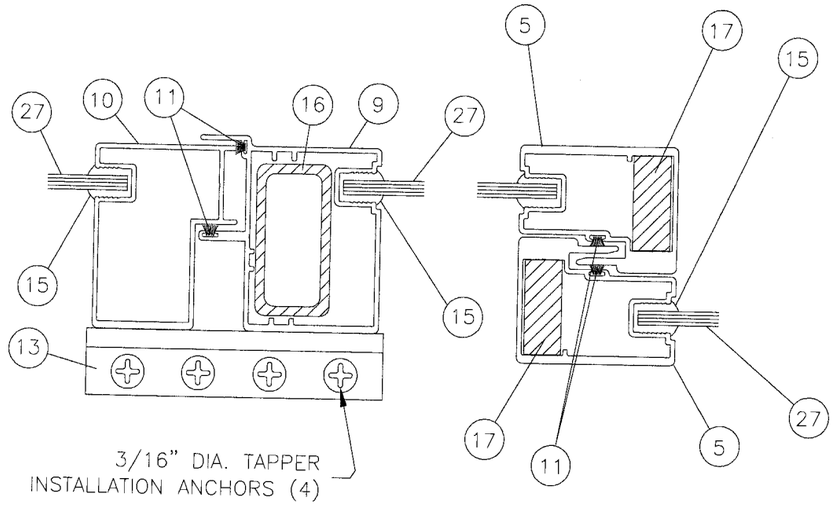

SECTION G

SECTION H

MEDIUM REINFORCEMENT

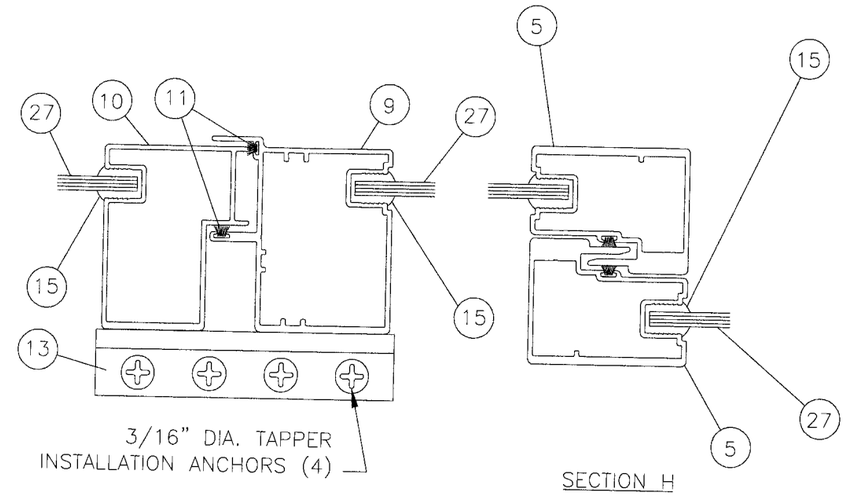

SECTION G

SECTION H

LIGHT REINFORCEMENT

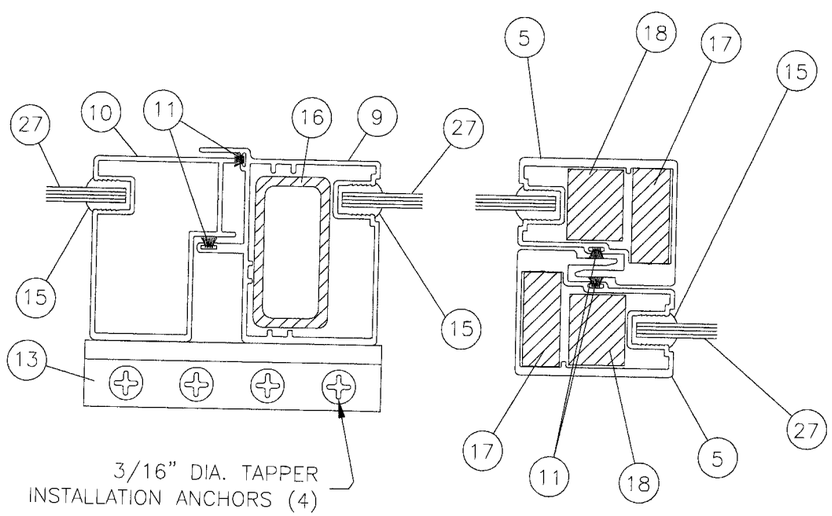

SECTION G

SECTION H

HEAVY REINFORCEMENT

PRODUCT REVIEWED
as complying with the Florida
Building Code
Acceptance No. 06-1012.01
Expiration Date NOV. 5, 2007
By Manuel Lopez
Miami-Dade Product Control
Division

SYM	REVISION	DATE	BY
A	PER MIAMI DADE MARKUPS 10/15/06	10/17/06	BB

L. Roberto Lomas
P.E. No. 62514
Luis R. Lomas
10/17/06
PTC, LLC
1535 Cogswell Street, Suite C25
Rockledge, Florida 32955
FBPE Certificate of Authorization NO. 25935

JELD-WEN
355 CENTER COURT – VENICE, FLORIDA 34285

TITLE: 4500 SERIES SLIDING GLASS DOOR
HORIZONTAL INSTALLATION DETAILS

PREPARED BY: PTC, LLC
Phone 321.690.1788 Fax 321.690.1789

DRN: BB	DATE: 7/21/06
SCALE: NTS	DWG. NO: JELD0036
REV: A	SHEET: 5 OF 8

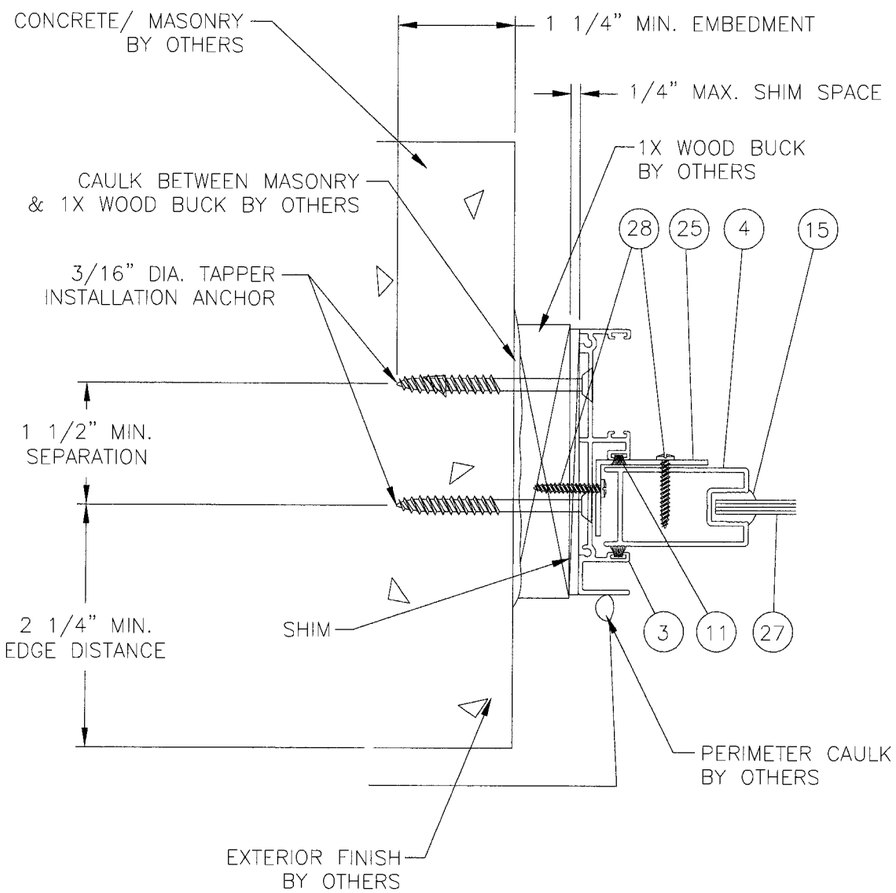

SECTION E
IN CONCRETE

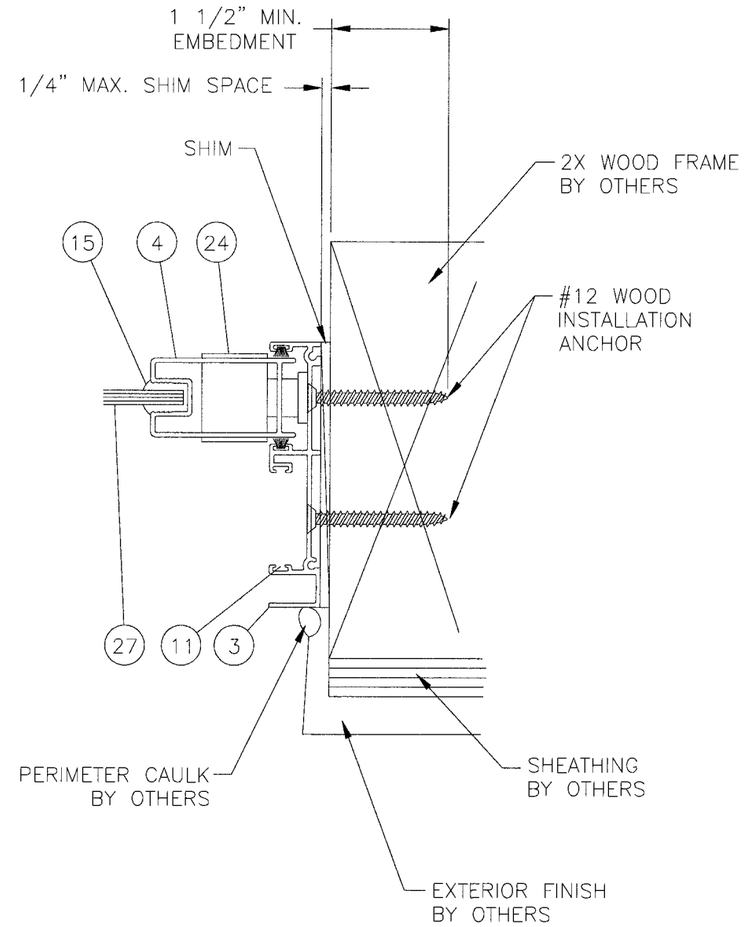

SECTION F
IN 2X WOOD FRAME

PRODUCT REVIEWED
in accordance with the Florida
Building Code
Compliance No. 06-1012.01
Registration Date Nov. 3, 2007
By Manuel Perez
Miami-Dade Product Control
Division

SYM	REVISION	DATE	BY
A	PER MIAMI DADE MARKUPS 10/15/06	10/17/06	BB

L. Roberto Lomas
P.E. No. 62514
10/17/06
PTC, LLC
1535 Cogswell Street, Suite C25
Rockledge, Florida 32955
FBPE Certificate of Authorization NO. 25935

JELD-WEN
355 CENTER COURT - VENICE, FLORIDA 34285

TITLE: 4500 SERIES SLIDING GLASS DOOR HORIZONTAL INSTALLATION DETAILS

PREPARED BY: PTC, LLC
Phone 321.690.1788 Fax 321.690.1789

DRN: BB	DATE: 7/21/06
SCALE: NTS	DWG. NO: JELD0036
REV: A	SHEET: 6 OF 8

MATERIALS/PARTS LIST

KEY	PART NO.	QTY.	DESCRIPTION	REMARKS
1	SGD2MH	1	FRAME HEAD	6063-T6
2	SGD2TEM	1	FRAME SILL	6063-T6
3	SGD2MJ	2	FRAME JAMB	6063-T6
4	SGDLST	AS REQD.	LOCK STILE	6063-T6
5	ASDINT	AS REQD.	H.D. INTERLOCK	6063-T6
6	SGDBRF	AS REQD.	PANEL BOTTOM RAIL (FIXED)	6063-T6
7	SGDBRM	AS REQD.	PANEL BOTTOM RAIL (ACTIVE)	6063-T6
8	SGDTPR	AS REQD.	TOP RAIL	6063-T6
9	ASDASF	AS REQD.	FEMALE ASTRAGAL	6063-T6
10	ASDASM	AS REQD.	MALE ASTRAGAL	6063-T6
11	01257	AS REQD.	TOP RAIL WEATHER SEAL	FIN SEAL PILE
12	01053	AS REQD.	BOTTOM RAIL WEATHER SEAL	VINYL
13	SGDFPC	AS REQD.	OUTER FIXED PANEL BRACKET	6063-T6
14	SCR10S	AS REQD.	#10 X 3/4' ASSEMBLY SCREW	
15	01052	AS REQD.	GLAZING BEAD	P.V.C.
16	00009	AS REQD.	1" X 2" X 1/8" TUBE FEMALE INTERLOCK REINFORCEMENT	STEEL
17	00003	AS REQD.	1/2" X 1 1/4" BAR MALE INTERLOCK REINFORCEMENT	STEEL
18	00011	AS REQD.	3/4" X 15/16" BAR MALE ASTRAGAL REINFORCEMENT	STEEL
19	00010	AS REQD.	3/4" X 3/4" X 1/8" TUBE BOTTOM RAIL REINFORCEMENT	STEEL
20	SGD20AM	AS REQD.	2" SILL RISER	6063-T6
21	V-21	AS REQD.	WEATHER SEAL	BULB VINYL
22	SGDPPI	AS REQD.	CLAW TYPE LOCK	DNS 1400 OR EQUAL
23	SGDWHL	AS REQD.	OPERATING PANEL ROLLER ASSEMBLY	
24	SGDPPE	AS REQD.	LOCK ASSEMBLY	
25	SGDFPC	AS REQD.	1 1/2" X 1" X 1/16" ANGLE	ALUMINUM
26	N/A	AS REQD.	#6 X 3/4" SMS (1 PER LEG)	
27	01595	AS REQD.	3/16" TEMPERED GLASS	
28	SGD30AM	AS REQD.	3" SILL RISER	6063-T6

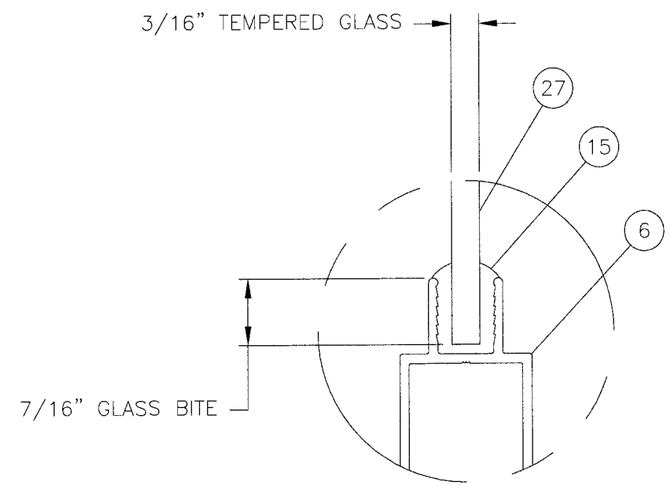

DETAIL A

PRODUCT REVISED
to comply with the Florida
Building Code
Application No. 06-1012.01
Expiration Date NOV. 5, 2007
By Manuel Perez
Miami Dade Product Control
Division

SYM	REVISION	DATE	BY
A	PER MIAMI DADE MARKUPS 10/15/06	10/15/06	BB

L. Roberto Lomas
P.E. No. 62514
10/17/06
PTC, LLC
1535 Cogswell Street, Suite C25
Rockledge, Florida 32955
FBPE Certificate of Authorization NO. 25935

JELD-WEN
355 CENTER COURT - VENICE, FLORIDA 34285

TITLE: 4500 SERIES SLIDING GLASS DOOR
BILL OF MATERIALS & GLAZING DETAIL

PREPARED BY: PTC, LLC
Phone 321.690.1788 Fax 321.690.1789

DRN: BB	DATE: 7/21/06
SCALE: NTS	DWG. NO: JELD0036
REV: A	SHEET: 7 OF 8

(1) MAIN FRAME HEAD
TYP. WALL THICKNESS 0.058

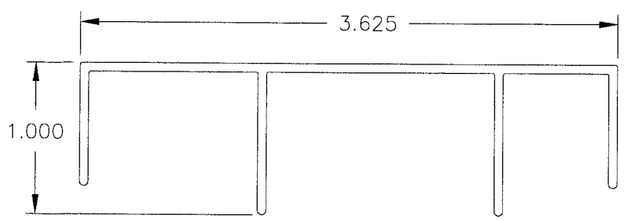

(2) MAIN FRAME SILL
TYP. WALL THICKNESS 0.062

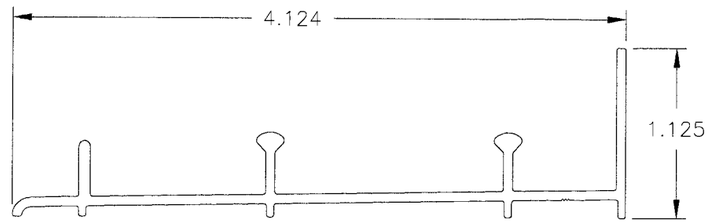

(3) MAIN FRAME JAMB
TYP. WALL THICKNESS 0.058

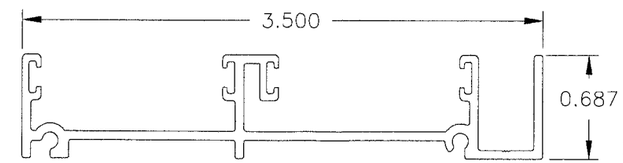

BOTTOM RAIL REINFORCEMENT
TYP. WALL THICKNESS 0.125
(ACTIVE PANEL)
(19)

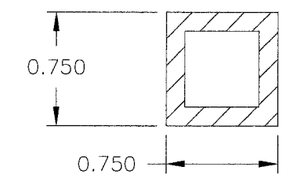

(4) LOCK STILE
TYP. WALL THICKNESS 0.060

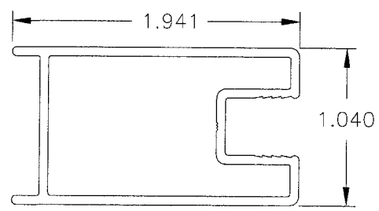

(6) FIXED BOTTOM RAIL
TYP. WALL THICKNESS 0.062

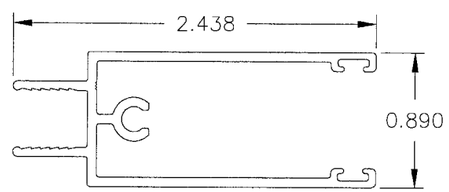

(7) MOVING BOTTOM RAIL
TYP. WALL THICKNESS 0.062

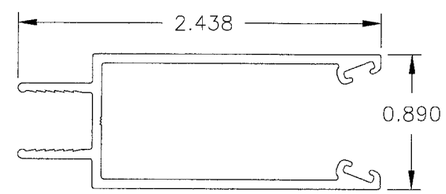

(8) TOP RAIL (ACTIVE)
TYP. WALL THICKNESS 0.062

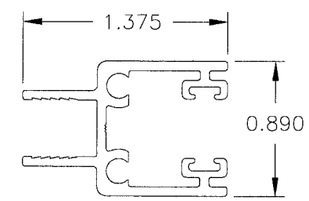

(16) FEMALE ASTRAGAL REINFORCEMENT
TYP. WALL THICKNESS 0.125

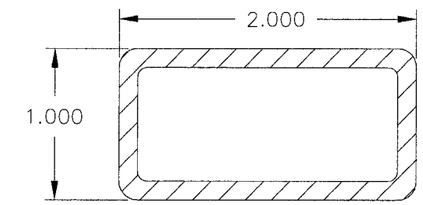

(5) H.D. INTERLOCK
TYP. WALL THICKNESS 0.062

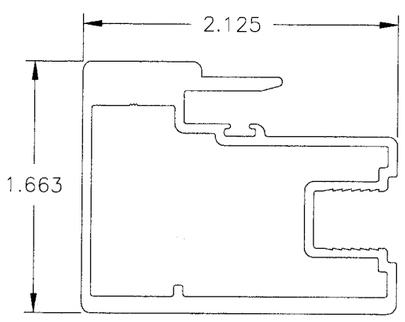

(9) FEMALE ASTRAGAL
TYP. WALL THICKNESS 0.062

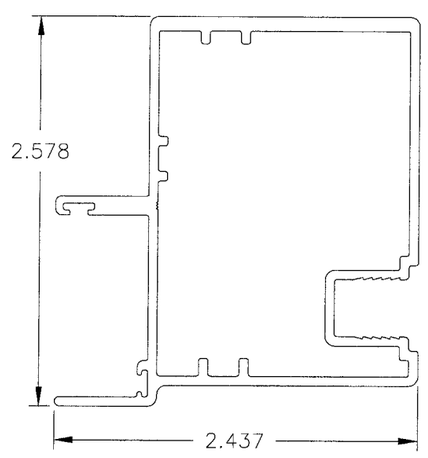

(10) MALE ASTRAGAL
TYP. WALL THICKNESS 0.060

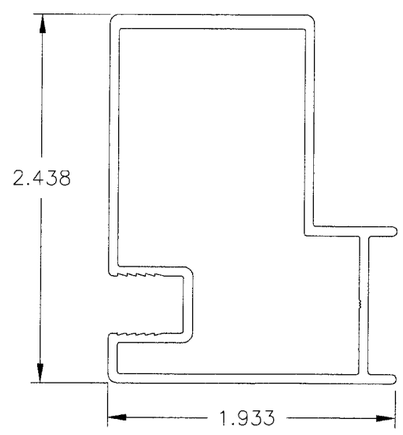

(18) HD INTERLOCK HEAVY
REINFORCEMENT
TYP. WALL THICKNESS NA

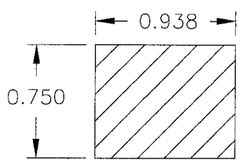

(17) HD INTERLOCK MEDIUM
REINFORCEMENT
TYP. WALL THICKNESS NA

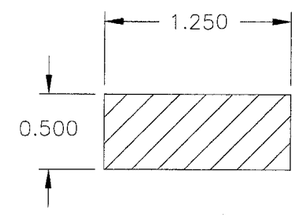

(20) 2" SILL RISER
TYP. WALL THICKNESS 0.060

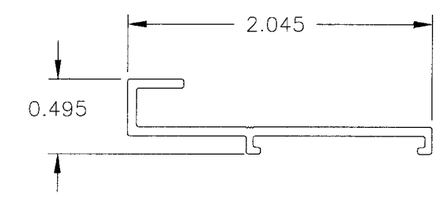

(13) OUTER FIXED PANEL BRACKET
TYP. WALL THICKNESS 0.250

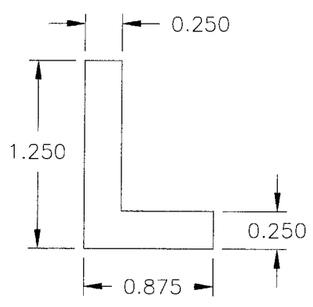

(28) 3" SILL RISER
TYP. WALL THICKNESS 0.060

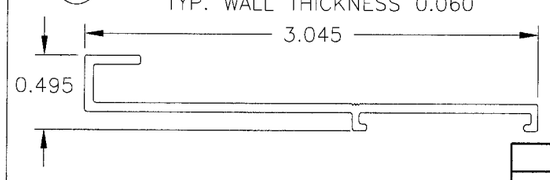

PRODUCT REVISED
as complying with the Florida
Building Code
Acceptance No. 06-1012.01
Expiration Date NOV. 5, 2007
By Manuel Perez
Miami-Dade Product Control
Division

SYM	REVISION	DATE	BY
A	PER MIAMI DADE MARKUPS 10/15/06	10/15/06	BB

L. Roberto Lomas
P.E. No. 62514
10/17/06
PTC, LLC
1535 Cogswell Street, Suite C25
Rockledge, Florida 32955
FBPE Certificate of Authorization NO. 25935

JELD-WEN
355 CENTER COURT – VENICE, FLORIDA 34285

TITLE: 4500 SERIES SLIDING GLASS DOOR COMPONENTS

PREPARED BY: PTC, LLC
Phone 321.690.1788 Fax 321.690.1789

DRN:	DATE:
BB	7/21/06
SCALE: NTS	DWG. NO: JELD0036
REV: A	SHEET: 8 OF 8