MIAMI-DADE COUNTY

BUILDING CODE COMPLIANCE OFFICE (BCCO)
PRODUCT CONTROL DIVISION

MIAMI-DADE COUNTY, FLORIDA
METRO-DADE FLAGLER BUILDING
140 WEST FLAGLER STREET, SUITE 1603
MIAMI, FLORIDA 33130-1563
(305) 375-2901 FAX (305) 375-2908
www.buildingcodeonline.com

NOTICE OF ACCEPTANCE (NOA)

Vetter Windows and Doors
880 Southview Drive
Mosinee, WI. 54455

SCOPE:

This NOA is being issued under the applicable rules and regulations governing the use of construction materials. The documentation submitted has been reviewed by Miami-Dade County Product Control Division and accepted by the Board of Rules and Appeals (BORA) to be used in Miami Dade County and other areas where allowed by the Authority Having Jurisdiction (AHJ).

This NOA shall not be valid after the expiration date stated below. The Miami-Dade County Product Control Division (In Miami Dade County) and/or the AHJ (in areas other than Miami Dade County) reserve the right to have this product or material tested for quality assurance purposes. If this product or material fails to perform in the accepted manner, the manufacturer will incur the expense of such testing and the AHJ may immediately revoke, modify, or suspend the use of such product or material within their jurisdiction. BORA reserves the right to revoke this acceptance, if it is determined by Miami-Dade County Product Control Division that this product or material fails to meet the requirements of the applicable building code.

This product is approved as described herein, and has been designed to comply with the Florida Building Code, including the High Velocity Hurricane Zone.

DESCRIPTION: Series 1103 Aluminum Clad Wood Fixed Window – L.M.I.

APPROVAL DOCUMENT: Drawing No. **1500**, titled "Aluminum Clad Tilt Double Hung Picture Window (Model 1103)" Sheets 1 through 3 of 3, dated 05/24/06, prepared by W. W. Schaefer Engineering & Consulting, P.A., signed and sealed by Warren W. Schaefer, P.E., bearing the Miami-Dade County Product Control Approval stamp with the Notice of Acceptance number and approval date by the Miami-Dade County Product Control Division.

MISSILE IMPACT RATING: Large & Small Missile Impact Resistant

LABELING: Each unit shall bear a permanent label with manufacturer's name or logo, city, state and following statement: "Miami-Dade County Product Control Approved", unless otherwise noted herein.

RENEWAL of this NOA shall be considered after a renewal application has been filed and there has been no change in the applicable building code negatively affecting the performance of this product.

TERMINATION of this NOA will occur after the expiration date or if there has been a revision or change in the materials, use, and/or manufacture of the product or process. Misuse of this NOA as an endorsement of any product, for sales, advertising or any other purposes shall automatically terminate this NOA. Failure to comply with any section of this NOA shall be cause for termination and removal of NOA.

ADVERTISEMENT: The NOA number preceded by the words Miami-Dade County, Florida, and followed by the expiration date may be displayed in advertising literature. If any portion of the NOA is displayed, then it shall be done in its entirety.

INSPECTION: A copy of this entire NOA shall be provided to the user by the manufacturer or its distributors and shall be available for inspection at the job site at the request of the Building Official.

This NOA consists of this page 1 and evidence pages E-1, as well as approval document mentioned above.

The submitted documentation was reviewed by **Manuel Perez P.E.**

PRODUCT CONTROL ACCEPTED

NOA No. 06-1012.02
Expiration Date: October 05, 2011
Approval Date: March 22, 2007

Vetter Windows and Doors

NOTICE OF ACCEPTANCE: EVIDENCE SUBMITTED

A. DRAWINGS

1. Manufacturer's die drawings and sections.
2. Drawing No. **1500**, titled "Aluminum Clad Tilt Double Hung Picture Window (Model 1103)" Sheets 1 through 3 of 3, dated 05/24/06, prepared by W. W. Schaefer Engineering & Consulting, P.A., signed and sealed by Warren W. Schaefer. P.E.

B. TESTS

1. Test reports on 1) Air Infiltration Test, per FBC, TAS 202-94
   2) Uniform Static Air Pressure Test, Loading per FBC, TAS 202-94
   3) Water Resistance Test, per FBC, TAS 202-94
   4) Large Missile Impact Test, per FBC, TAS 201-94
   5) Cyclic Wind Loading Test, per FBC, TAS 203-94

   along with installation diagram and drawing of glazed single Alum clad Wood fixed wood window & Mulled fixed windows, prepared by STORK Material Technology Inc., test report No. **180-7088**, dated 01/10/06, signed and sealed by Thomas Kolden, P.E.

C. CALCULATIONS

1. Verification calculations dated 06-23-06, complying w/ FBC-2004, prepared by W. W. Schaefer Engineering & Consulting, signed & sealed by Warren W. Schaefer, P.E.
2. Glazing complies w/ **ASTME-1300-98 & -02**

D. QUALITY ASSURANCE

1. Miami Dade Building Code Compliance Office (BCCO).

E. MATERIAL CERTIFICATIONS

1. Notice of Acceptance No. **01-1204. 01** issued to E.I. DuPont DeNemours for "DuPont **Sentry Glass (R) Plus**" dated 01/17/02, expiring on 01/14/07.

F. STATEMENTS

1. Statement letter of conformance to FBC 2004 dated June 14, 2006 & no financial interest signed & sealed by Warren W. Schaefer, P.E.
2. Statement of lab compliance, as part of the above test report.
3. Private Labeling Agreement document in conformance to BCCO guidelines dated 09/19/06 signed by Susan E. Hartwig.

G. OTHER

1. None.

Manuel Perez, P.E.
Product Control Examiner
NOA No. 06-1012.02
Expiration Date: October 05, 2011
Approval Date: March 22, 2007

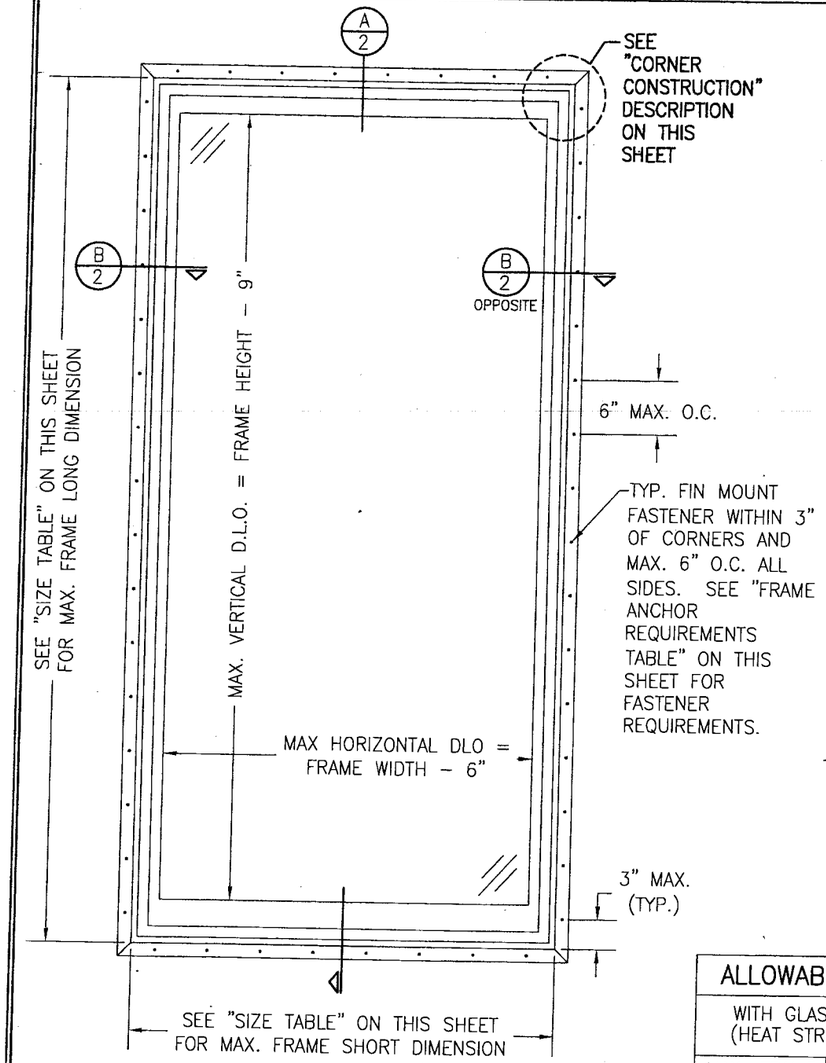

EXTERIOR ELEVATION SINGLE WINDOW

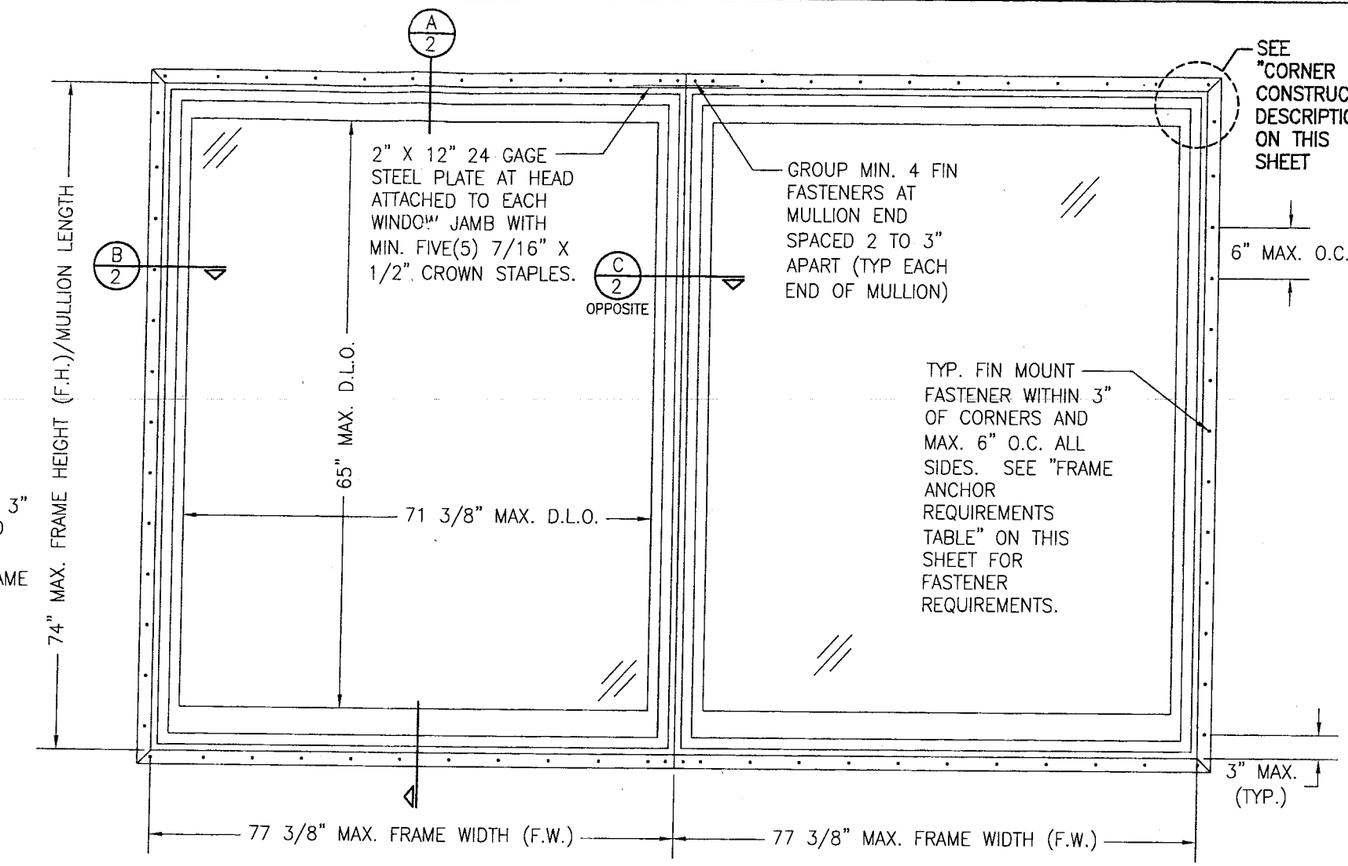

EXTERIOR ELEVATION; MULTIPLE WINDOWS

(FOR DETAIL NOT SHOWN, SEE SINGLE WINDOW ELEVATION)

1. ALL MULLED WINDOWS ARE RESTRICTED BY THE DIMENSIONS SPECIFIED.
2. UP TO 4 WINDOWS MAY BE STACKED HORIZONTALLY IN AN OPENING PROVIDING THE OPENING IS DESIGNED TO SUPPORT THE WINDOWS & THEIR TRANSFERED WIND LOADS.

GENERAL NOTES

1. THESE WINDOW SYSTEMS HAVE BEEN TESTED, ANALYZED AND APPROVED FOR DESIGN PRESSURES NOT TO EXCEED THOSE SHOWN IN THE "ALLOWABLE DESIGN LOADS" TABLE(S).
2. BUCKING, OPENINGS & BUCKING FASTENERS MUST BE PROPERLY DESIGNED & INSTALLED TO TRANSFER WIND LOADS TO THE STRUCTURE.
3. ALL HARDWARE & FASTENERS SHALL BE IN ACCORDANCE WITH THESE DRAWINGS & SHALL NOT VARY UNLESS SPECIFICALLY MENTIONED ON THE DRAWINGS.
4. THE DETAILS & SPECIFICATIONS SHOWN HEREIN REPRESENT THE PRODUCTS TESTED & PROPOSED FOR WATER, AIR, IMPACT, CYCLIC & UNIFORM STATIC AIR PRESSURE TESTING IN CONFORMANCE WITH THE 2004 FLORIDA BUILDING CODE PROTOCOLS TAS-201, 202 & 203 FOR LARGE MISSILE IMPACT WINDOWS.
5. THESE WINDOW SYSTEMS HAVE BEEN DESIGNED IN ACCORDANCE WITH THE 2004 FLORIDA BUILDING CODE (FBC) INCLUDING HIGH VELOCITY HURRICANE ZONES (HVHZ).
6. IMPACT SHUTTERS ARE NOT REQUIRED WITH THESE WINDOWS.
7. ALL ANCHORS SHALL BE INSTALLED AS SPECIFIED ON THESE DRAWINGS. SPECIFIED EMBEDMENT TO BASE MATERIAL SHALL BE BEYOND WALL FINISH OR STUCCO.
8. ALL FRAME ANCHORS SECURING WINDOW/DOOR FRAME TO PRESSURE TREATED BUCKS OR WOOD FRAMING SHALL BE CAPABLE OF RESISTING CORROSION CAUSED BY THE PRESSURE TREATING CHEMICALS IN THE WOOD.
9. MATERIALS, INCLUDING BUT NOT LIMITED TO STEEL SCREWS, THAT COME INTO CONTACT WITH OTHER DISSIMILAR MATERIALS SHALL MEET THE REQUIREMENTS OF 2004 FLORIDA BUILDING CODE SECTION 2003.8.4.

ALLOWABLE SINGLE WINDOW SIZE TABLE

WITH GLASS OPTION 1 (HEAT STRENGTHENED)		WITH GLASS OPTION 2 (ANNEALED)	
MAX. FRAME LONG DIMENSION	MAX. FRAME SHORT DIMENSION	MAX. FRAME LONG DIMENSION	MAX. FRAME SHORT DIMENSION
(IN.)	(IN.)	(IN.)	(IN.)
144"	45"	144"	39"
132"	50"	132"	43"
120"	55"	120"	47"
108"	61"	108"	53"
101 1/4"	65 1/4"	96"	59"
96"	68"	90"	63"
90"	73"	84"	68"
89"	74"	77 3/8"	74"

1. ALL HEIGHT & WIDTH DIMENSIONS ARE +/-1/2"

CORNER CONSTRUCTION:

FRAME CORNERS: WOOD JAMBS ARE RABBETED, BUTTED, SEALED WITH SILICONE & SECURED WITH THREE(3) 16 GAGE X 1/2" X 1 3/4" STAPLES PER CORNER. CLAD IS MITER CUT, SEALED AND SECURED WITH 1 NO. 6 X 1 1/4" SMS 410 S.S. SCREW PER CORNER.
SASH CORNERS: WOOD SASH CORNERS ARE TOUNGE & GROOVE FIT WITH CORNERS BUTTED AND SECURED WITH 1 NO. 8 X 2 1/2" SCREW THROUGH THE STILE INTO THE RAIL. ALUMINUM CLAD CORNERS ARE MITER CUT & SECURED WITH 2 NO. 6 X 1 1/4" SMS 410 S.S. SCREWS & SEALED WITH SILICONE.

ALLOWABLE DESIGN PRESSURE (SINGLE & MULLED UNITS)
+55/-67.5 PSF

FRAME ANCHOR REQUIREMENTS TABLE			
OPENING TYPE (SUBSTRATE)	FIN MOUNT FASTENER	MINIMUM EMBEDMENT	MINIMUM EDGE DIST.
2X_ WOOD FRAME OR BUCK	NO. 8 SMS SCREW	1 1/2"	1/2"

Approved as complying with the Florida Building Code
Date MARCH 22, 2007
NOA# 06-1012.02
Miami Dade Product Control Division
By Manuel Perez

DRAWN BY: W.R.M.	CHECKED BY: W.W.S.
PLOT: 1=16	DATE: 05/24/06

NO.	REVISION DESCRIPTION	BY	DATE

DRAWING TITLE
ALUMINUM CLAD TILT DOUBLE HUNG PICTURE WINDOW (MODEL 1103)

MANUFACTURER
VETTER WINDOWS & DOORS
1000 SOUTHVIEW DRIVE
MOSINEE, WI 54455
715-693-7000

CONSULTANTS
W. W. SCHAEFER ENGINEERING & CONSULTING, P.A.
600 SANDTREE DRIVE; SUITE 203B
PALM BEACH GARDENS, FL 33403
PHONE: 561-775-4902 FAX: 561-775-4903

CERTIFICATION
OCT 05 2006
WARREN W. SCHAEFER, P.E.
P.E. NO. 44135

DRAWING NO. 1500
REV.
SHEET NO. 1 OF 3

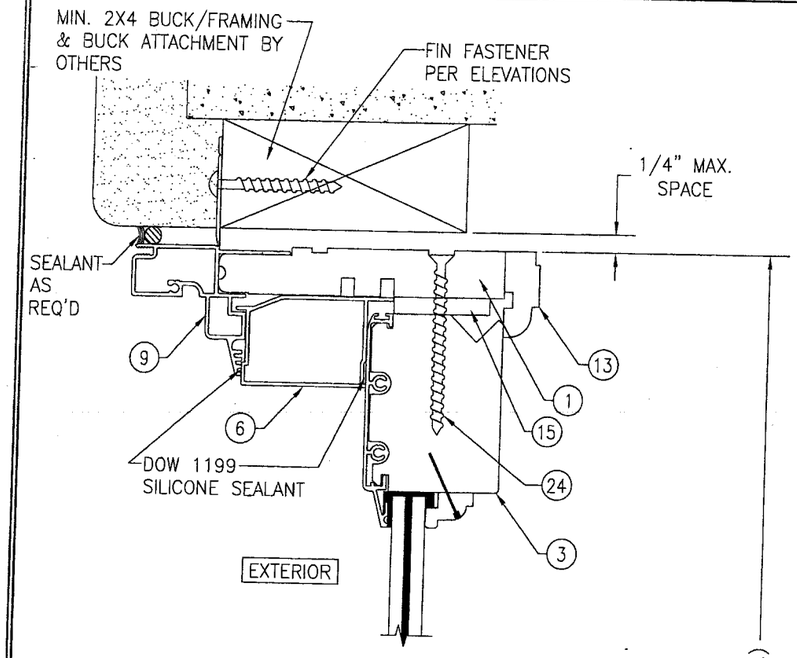

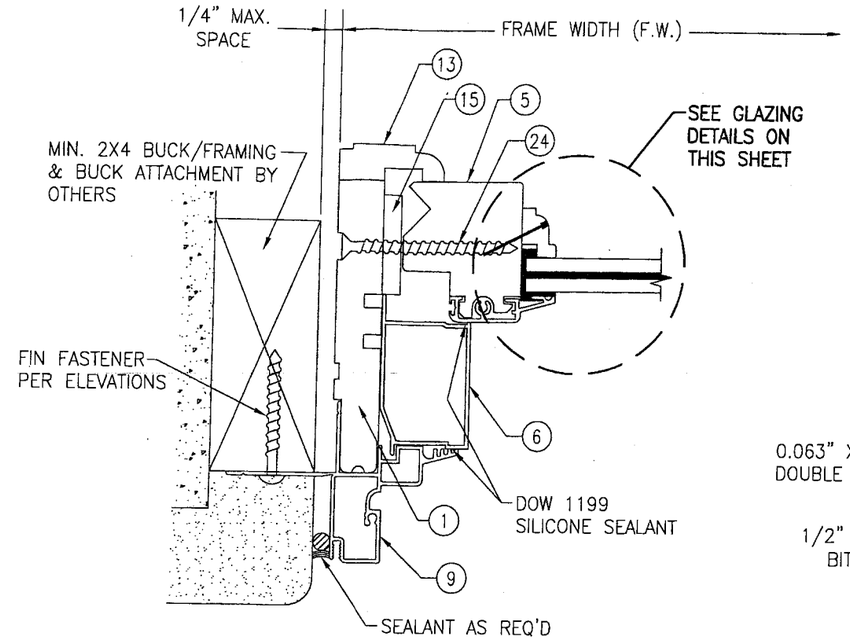

SECTION B/2
SCALE: 1/2 FULL

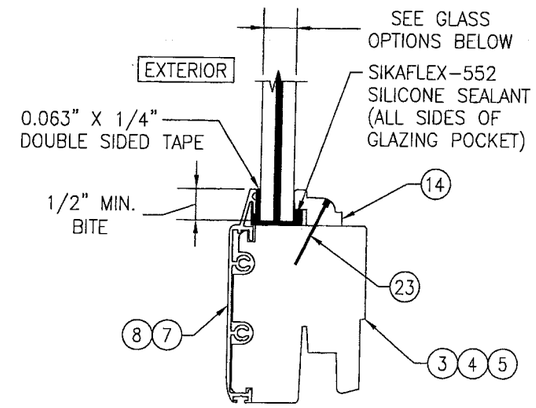

TYP. GLAZING DETAIL

GLASS OPTION 1:
9/16" THICK LAMINATED HEAT STRENGTHENED GLASS (1/4" HT. ST./0.09 DUPONT SGP/1/4" HT.ST)
GLASS OPTION 2:
9/16" THICK LAMINATED ANNEALED GLASS (1/4" AN/0.09 DUPONT SGP/1/4" AN)

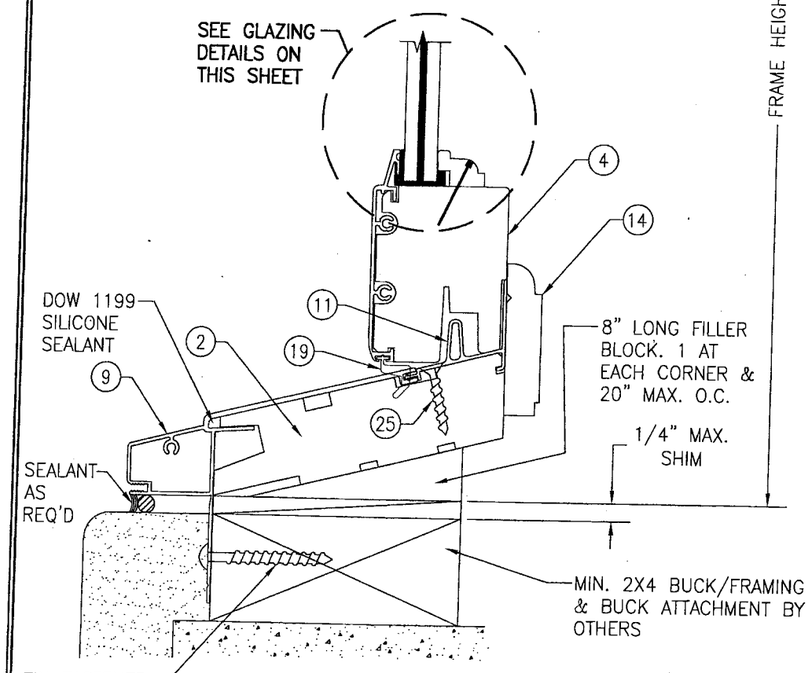

SECTION A/2
SCALE: 1/2 FULL

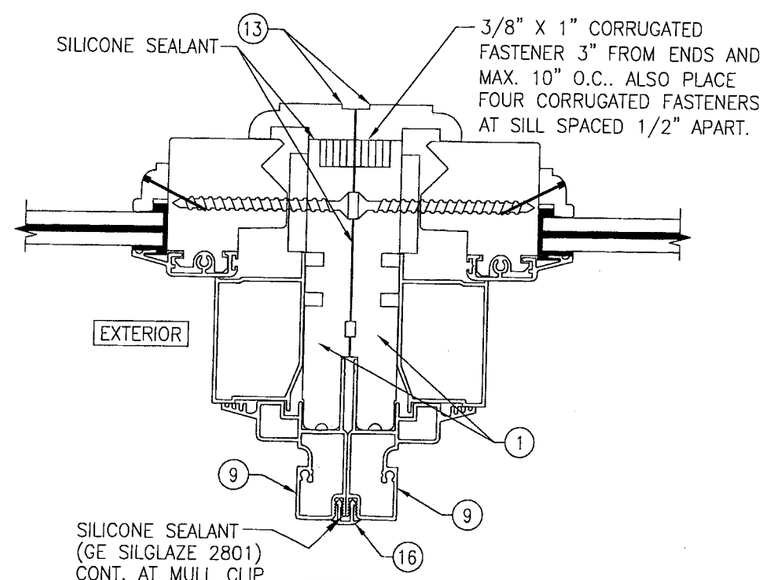

SECTION C/2
SCALE: 1/2 FULL
(FOR DETAIL NOT SHOWN, SEE OTHER SECTIONS)

Approved as complying with the Florida Buiding Code
Date MARCH 22, 2007
NOA# 06-1012.02
Miami Dade Product Control Division
By Manuel Perez

DRAWN BY: W.R.M	CHECKED BY: W.W.S.
PLOT: 1=2	DATE: 05/24/06

NO.	REVISION DESCRIPTION	BY	DATE

DRAWING TITLE
ALUMINUM CLAD TILT DOUBLE HUNG PICTURE WINDOW (MODEL 1103)

MANUFACTURER
VETTER WINDOWS & DOORS
1000 SOUTHVIEW DRIVE
MOSINEE, WI 54455
715-693-7000

CONSULTANTS
W. W. SCHAEFER ENGINEERING & CONSULTING, P.A.
8895 N. MILITARY TRAIL; SUITE C-204
PALM BEACH GARDENS, FL 33410
PHONE: 561-775-4902 FAX: 561-775-4903

CERTIFICATION
OCT 05 2006
WARREN W. SCHAEFER, P.E.
P.E. NO. 41135

DRAWING NO. 1500
REV.
SHEET NO. 2 OF 3

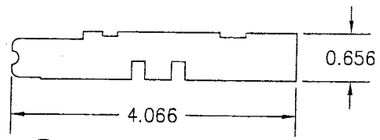

1 HEAD/JAMB

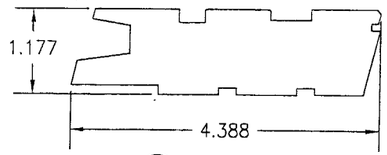

2 SILL

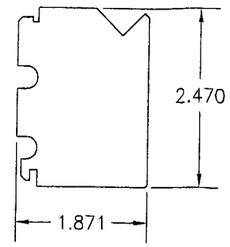

3 TOP RAIL

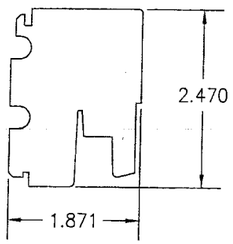

4 BOTTM RAIL

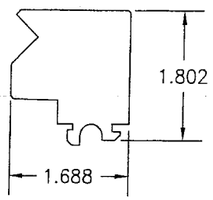

5 STILE

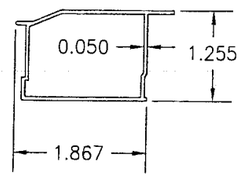

6 HEAD/JAMB FILLER

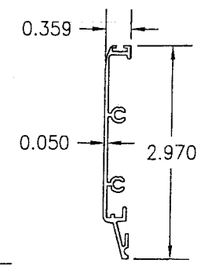

7 RAIL CLAD

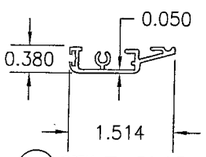

8 STILE CLAD

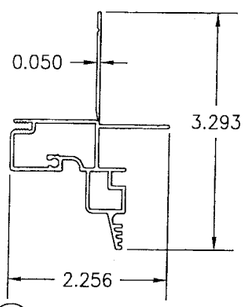

9 HEAD/JAMB CLAD

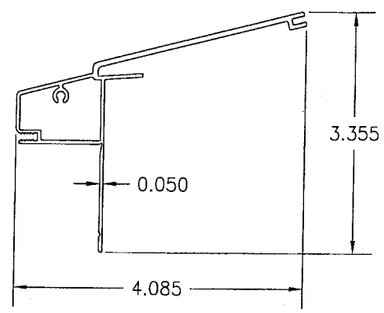

10 SILL CLAD

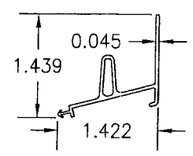

11 SILL RISER

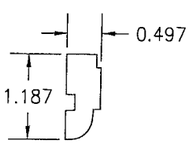

12 HEAD INSIDE STOP

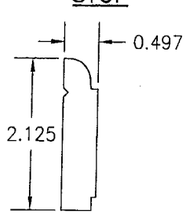

13 SILL INSIDE STOP

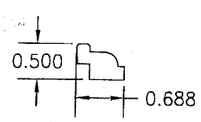

14 GLAZING BEAD

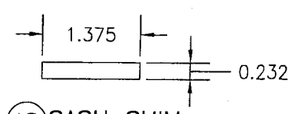

15 SASH SHIM

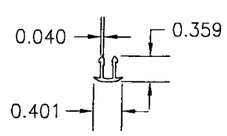

16 MULLION CLIP

ITEM #	PART #	ITEM DESCRIPTION	MANUFACTURER/NOTES
		PARTS	
1	08-1004-01	HEAD/JAMB	LVL
2	08-1003-01	SILL	* PONDEROSA PINE
3	08-2147-02	TOP RAIL	* PONDEROSA PINE
4	08-2148-02	BOTTOM RAIL	* PONDEROSA PINE
5	08-2106-02	STILE	* PONDEROSA PINE
6	04-2103-02	HEAD/JAMB FILLER	6063-T5 ALUMINUM
7	04-1017-01	RAIIL CLAD	6063-T5 ALUMINUM
8	04-1018-01	STILE CLAD	6063-T5 ALUMINUM
9	P0119700	HEAD/JAMB CLAD	6063-T5 ALUMINUM
10	P0120600	SILL CLAD	6063-T5 ALUMINUM
11	224-063	SILL RISER	6063-T5 ALUMINUM
12	08-2553-02	HEAD INSIDE STOP	* PONDEROSA PINE
13	08-1005-01	SILL INSIDE STOP	* PONDEROSA PINE
14	160038T	GLAZING BEAD	* PONDEROSA PINE
15	60-0894-01	SASH SHIM (AS REQ'D)	* PONDEROSA PINE
16	04-0005-M051	CONTINUOUS MULLION CLIP	6063-T5 ALUMINUM
		SEALS AND SEALANTS	
19	12-0055	WEATHERSTRIP	VINYL
		MISC. FASTENERS	
23	-	18 GA. X 1" BRAD 3" FROM CORNERS & 8" O.C.	2 PER FRAME CLIP
24	-	NO. 8 X 2 1/2" SCREW	WITHIN 5" OF SASH CORNERS & 10" TO 12" O.C.
25	-	NO. 6 X 1" SCREW	WITHIN 3" OF ENDS & 10" TO 12" O.C.

* WOOD USED WITH TEST UNITS WAS GRADE 2 PONDEROSA PINE. ALTERNATE WOOD SPECIES TO BE APPLICABLE WITH THESE WINDOWS IS MIN. GRADE 2 MAHOGANY, SOUTHERN PINE, OAK, CHERRY, MAPLE, DOUGLAS FIR & CYPRUS.

NOTE: ALL WOOD IS RECEIVED BY WEATHER SHIELD AS GRADE 2, BUT IS MACHINED BY WEATHER SHIELD TO A SELECT GRADE USE.

Approved as complying with the Florida Buiding Code
Date MARCH 22, 2007
NOA# 06-1012.02
Miami Dade Product Control Division
By Manuel Perez

DRAWN BY: W.R.M	CHECKED BY: W.W.S.
PLOT: 1=2	DATE: 05/24/06

NO.	REVISION DESCRIPTION	BY	DATE

DRAWING TITLE
ALUMINUM CLAD TILT DOUBLE HUNG PICTURE WINDOW (MODEL 1103)

MANUFACTURER
VETTER WINDOWS & DOORS
1000 SOUTHVIEW DRIVE
MOSINEE, WI 54455
715-693-7000

CONSULTANTS
W. W. SCHAEFER ENGINEERING & CONSULTING, P.A.
8895 N. MILITARY TRAIL; SUITE C-204
PALM BEACH GARDENS, FL 33410
PHONE: 561-775-4902 FAX: 561-775-4903

CERTIFICATION
OCT 03 2006
WARREN W. SCHAEFER, P.E.
P.E. NO. 44135

DRAWING NO. 1500 REV.

SHEET NO. 3 OF 3