MIAMI-DADE

BUILDING CODE COMPLIANCE OFFICE (BCCO)
PRODUCT CONTROL DIVISION

MIAMI-DADE COUNTY, FLORIDA
METRO-DADE FLAGLER BUILDING
140 WEST FLAGLER STREET, SUITE 1603
MIAMI, FLORIDA 33130-1563
(305) 375-2901 FAX (305) 375-2908

NOTICE OF ACCEPTANCE (NOA)

Southeastern Metal Manufacturing Company, Inc.
11801 Industry Drive
Jacksonville, FL 32218

SCOPE:
This NOA is being issued under the applicable rules and regulations governing the use of construction materials. The documentation submitted has been reviewed by the BCCO and accepted by the Building Code and Product Review Committee to be used in Miami Dade County and other areas where allowed by the Authority Having Jurisdiction (AHJ).

This NOA shall not be valid after the expiration date stated below. The BCCO (In Miami Dade County) and/or the AHJ (in areas other than Miami Dade County) reserve the right to have this product or material tested for quality assurance purposes. If this product or material fails to perform in the accepted manner, the manufacturer will incur the expense of such testing and the AHJ may immediately revoke, modify, or suspend the use of such product or material within their jurisdiction. BCCO reserves the right to revoke this acceptance, if it is determined by BCCO that this product or material fails to meet the requirements of the applicable building code.

This product is approved as described herein, and has been designed to comply with the Florida Building Code and including the High Velocity Hurricane Zone of the Florida Building Code.

DESCRIPTION: Verti-Lok Standing Seam Metal Panel

LABELING: Each unit shall bear a permanent label with the manufacturer's name or logo, city, state and the following statement: "Miami-Dade County Product Control Approved", unless otherwise noted herein.

RENEWAL of this NOA shall be considered after a renewal application has been filed and there has been no change in the applicable building code negatively affecting the performance of this product.

TERMINATION of this NOA will occur after the expiration date or if there has been a revision or change in the materials, use, and/or manufacture of the product or process. Misuse of this NOA as an endorsement of any product, for sales, advertising or any other purposes shall automatically terminate this NOA. Failure to comply with any section of this NOA shall be cause for termination and removal of NOA.

ADVERTISEMENT: The NOA number preceded by the words Miami-Dade County, Florida, and followed by the expiration date may be displayed in advertising literature. If any portion of the NOA is displayed, then it shall be done in its entirety.

INSPECTION: A copy of this entire NOA shall be provided to the user by the manufacturer or its distributors and shall be available for inspection at the job site at the request of the Building Official.

This renews NOA# 01-1019.04 and consists of pages 1 through 5.
The submitted documentation was reviewed by Alex Tigera.

ROOFING SYSTEM APPROVAL:

Category:	Roofing
Sub-Category:	Metal, Panels (Non-Structural)
Material:	Steel
Deck Type:	Steel
Maximum Design Pressure	**-87.5 psf**

TRADE NAMES OF PRODUCTS MANUFACTURED OR LABELED BY APPLICANT:

Product	Dimensions	Test Specifications	Product Description
Verti-Loc	Length: various Height: 2" Width: 16" Thickness 0.023"	TAS 110	Corrosion resistant, galvalume, performed, standing seam, coated, pre-finished, metal panels.
Panel Clips	Length: 3-½" Width: 1" Height: 2" Thickness 0.047"	TAS 110	Corrosion resistant, two-piece formed, painted or unpainted steel clips for metal panel installation.
Clip Bearing Plate	Length: 6" Width: 6" Thickness 0.047"	TAS 110	Corrosion resistant, galvalume, performed, square supporting plate used under panel clips.

EVIDENCE SUBMITTED:

Test Agency	Test Identifier	Test Name/Report	Date
Hurricane Test Laboratory, Inc.	0041-0819-01 Specimen # 1-3	Uplift Pressure Testing UL 580	Aug. 2001
PPG Industries		ASTM G 26 ASTM B 117	March 2001
PRI Asphalt Technologies, Inc.	PRI01073	TAS-100-95 (Wind Driven Rain Test)	Sep. 2001

APPROVED ASSEMBLIES:

System: Verti-Lok

Deck Type: 18-22 ga. Steel

Slope Range: 2": 12" or greater

Maximum Uplift Pressure: The maximum allowable design pressure for the 16" wide panel shall be **–87.5 psf.**

Deck Attachment: Type B galvanized (G90) steel deck shall be secured 6" o.c. to structural supports spaced a maximum of 5 ft o.c in accordance with applicable Building Code, but in no case shall it be less than 5/16" puddle welds with 1" x 7/8" steel weld washers at bottom of each flute.

Underlayment: Minimum underlayment shall be a ASTM D 226 Type II installed with a minimum 4" side-laps and 6" end-laps. Underlayment shall be fastened with approved corrosion resistant fasteners and plates, spaced 12" o.c. on the laps and two rows 24" o.c. in the field of roll. Or any Miami-Dade County Product Control Approved self-adhering underlayment having a current NOA.

Insulation: (Requires listed bearing plate for clip attachment) Minimum ¾" to maximum 4" thick of an approved rigid board insulation with current NOA with a minimum 25 psi compressive strength fastened with approved fasteners and plates. Fastening density shall be in compliance with applicable Building Code and Roofing Application Standard RAS 117.

Fire Barrier Board: Any approved fire barrier having a current NOA, or for class A or B fire rating, install minimum ¼" thick Georgia Pacific "Dens Deck" (with current NOA) or minimum 4mm thick of Tritex, RockRoof (with current NOA) or $^{5}/_{8}$" water resistant type X gypsum sheathing with treated core and facer.

Bearing Plate: Fastened the approved clip bearing plate over the prepared roofing simultaneously with the approved clip.

Valleys: Valley construction shall be in compliance with Roofing Application Standard RAS 133 and with the current published installation instructions and details in Southeastern Metals Roofing Installation Manual.

Metal Panels and Accessories: Install the "Verti-Lok Metal Panel" panels including flashings penetrations, valleys, end laps and accessories in compliance Southeastern Metals' current, published installation instructions and in compliance with the minimum requirements detailed in Roofing Application Standard RAS 133.

Panels shall be installed along the male rib with approved clips (3-½" long x 1-7/8" tall), clips shall be attached to the deck through the bearing plates with two (2) corrosion resistant #12-13 self-drilling screws of sufficient length to penetrate through bottom flange of the metal deck a minimum of ½" at a maximum spacing not exceed 24" o.c. The female rib of panel is snapped over the male rib of panel.

LIMITATIONS

1. The maximum designed pressure limitation listed shall be applicable to all roof pressure zones (i.e. field, perimeters, and corners). Neither rational analysis, nor extrapolation shall be permitted for enhanced fastening at enhanced pressure zones (i.e. perimeters, extended corners and corners). The maximum fastener spacing noted in the "Systems Description" section of this approval shall not be exceeded.

2. Panels may be roll formed in continuous lengths from eave to ridge. Maximum lengths shall be as described in Roofing Application Standard RAS 133.

3. All panels shall be permanently labeled with the manufacturer's name and/or logo, and the following statement: "Miami-Dade County Product Control Approved. All clips shall be permanently labeled with the manufacturer's name and/or logo, and/or model.

4. Fire classification is not part of this acceptance; refer to a current Approved Roofing Materials Directory for fire ratings of this product.

PROFILE DRAWINGS

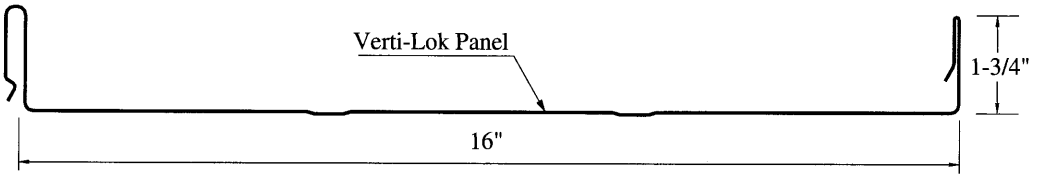

VERTI-LOK METAL PANEL

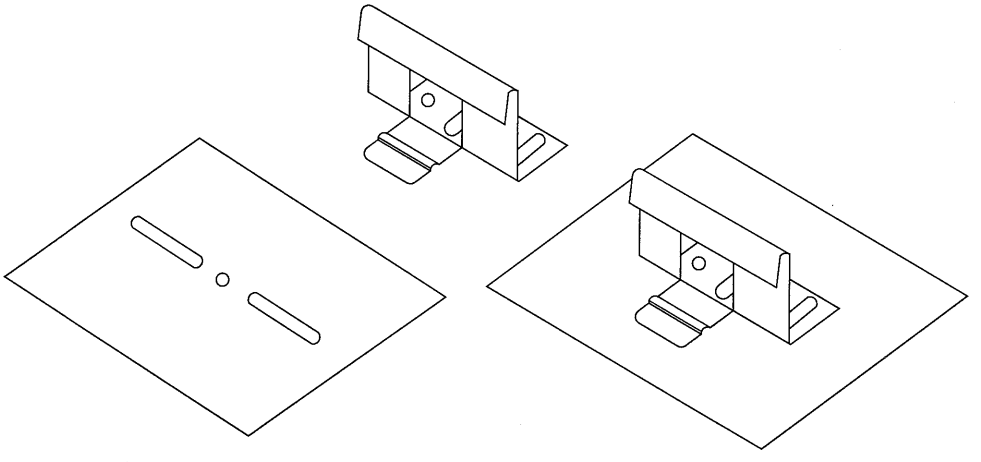

PANEL CLIP, BEARING PLATE

PROFILE DRAWINGS

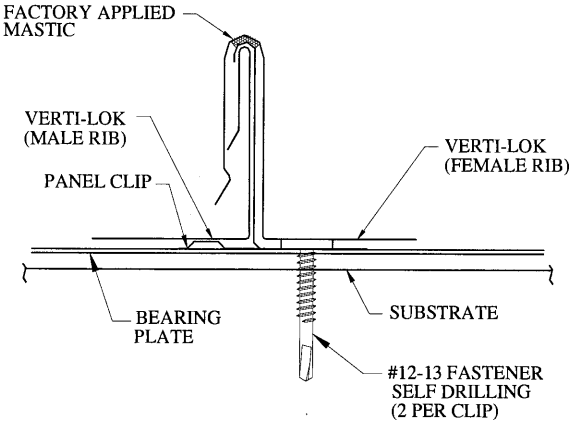

VERTI-LOK ROOF PANEL AND PANEL CLIPS

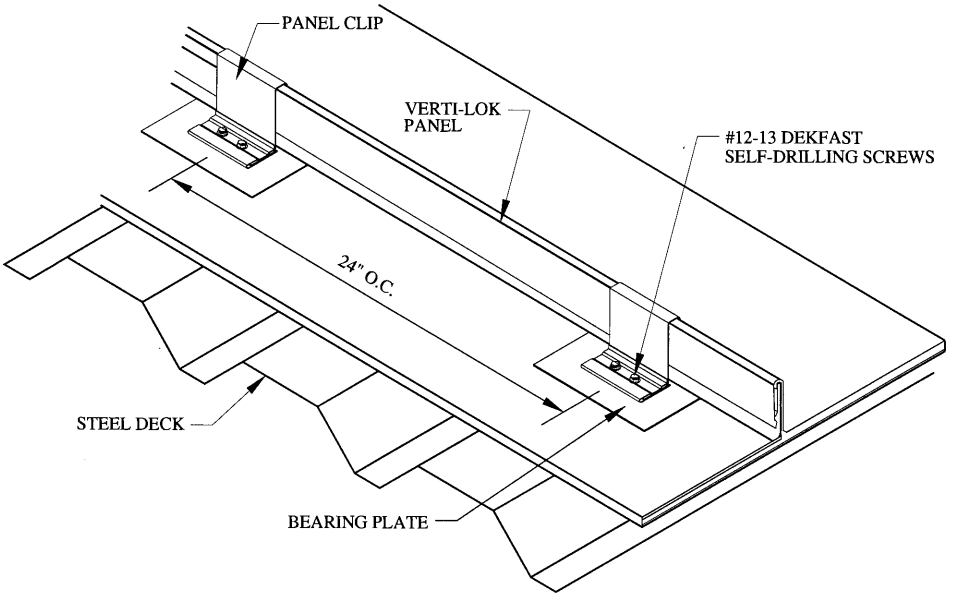

END OF THIS ACCEPTANCE