MIAMI-DADE COUNTY, FLORIDA
METRO-DADE FLAGLER BUILDING

BUILDING CODE COMPLIANCE OFFICE (BCCO)
PRODUCT CONTROL DIVISION

140 WEST FLAGLER STREET, SUITE 1603
MIAMI, FLORIDA 33130-1563
(305) 375-2901 FAX (305) 375-2908

NOTICE OF ACCEPTANCE (NOA)

Southeastern Metals Manufacturing Co., Inc.
11801 Industry Drive
Jacksonville, FL. 32218

SCOPE:

This NOA is being issued under the applicable rules and regulations governing the use of construction materials. The documentation submitted has been reviewed by Miami-Dade County Product Control Division and accepted by the Board of Rules and Appeals (BORA) to be used in Miami Dade County and other areas where allowed by the Authority Having Jurisdiction (AHJ).

This NOA shall not be valid after the expiration date stated below. The Miami-Dade County Product Control Division (In Miami Dade County) and/or the AHJ (in areas other than Miami Dade County) reserve the right to have this product or material tested for quality assurance purposes. If this product or material fails to perform in the accepted manner, the manufacturer will incur the expense of such testing and the AHJ may immediately revoke, modify, or suspend the use of such product or material within their jurisdiction. BORA reserves the right to revoke this acceptance, if it is determined by Miami-Dade County Product Control Division that this product or material fails to meet the requirements of the applicable building code.

This product is approved as described herein, and has been designed to comply with the Florida Building Code, including the High Velocity Hurricane Zone.

DESCRIPTION: DESCRIPTION: 5-V Crimp Metal Roofing Panel System

LABELING: Each unit shall bear a permanent label with the manufacturer's name or logo, city, state and following statement: "Miami-Dade County Product Control Approved", unless otherwise noted herein.

RENEWAL of this NOA shall be considered after a renewal application has been filed and there has been no change in the applicable building code negatively affecting the performance of this product.

TERMINATION of this NOA will occur after the expiration date or if there has been a revision or change in the materials, use, and/or manufacture of the product or process. Misuse of this NOA as an endorsement of any product, for sales, advertising or any other purposes shall automatically terminate this NOA. Failure to comply with any section of this NOA shall be cause for termination and removal of NOA.

ADVERTISEMENT: The NOA number preceded by the words Miami-Dade County, Florida, and followed by the expiration date may be displayed in advertising literature. If any portion of the NOA is displayed, then it shall be done in its entirety.

INSPECTION: A copy of this entire NOA shall be provided to the user by the manufacturer or its distributors and shall be available for inspection at the job site at the request of the Building Official.

This renews NOA # 04-0719.01 and consists of pages 1 through 5.
The submitted documentation was reviewed by Alex Tigera.

ROOFING SYSTEM APPROVAL

Category: Roofing
Sub-Category: Non-Structural Metal Roofing
Material: Steel
Maximum Design Pressure: **-57.5 psf.**

TRADE NAMES OF PRODUCTS MANUFACTURED OR LABELED BY APPLICANT:

Product	Dimensions	Test Specifications	Product Description
5V Crimp Metal Roof Panels	Length : various Height : $^{7}/_{16}$" Width: 25 ½" (Coverage width: 24") Thickness : 0.0217	TAS 125	Corrosion resistant, galvalume or galvanized performed, coated, pre-finished, metal panels.

EVIDENCE SUBMITTED :

Test Agency	Test Identifier	Test Name/Report	Date
Construction Research Laboratory, Inc.	5898A	Direct Deck Test Uplift Pressure Testing ASTM E 330 Wind Driven Rain	Oct. 1993
Construction Research Laboratory, Inc.	5898B	Over Battens Test Uplift Pressure Testing ASTM E 330 Wind Driven Rain	Oct. 1993
Hurricane Test Laboratories, Inc.	0041-0102-98	UL –580 test PA 125	Jan. 1998

APPROVED ASSEMBLY:

System:	"5V-Crimp" Metal Panels
Deck Type:	Wood, Non-insulated
Deck Description:	$^{19}/_{32}$" or greater plywood or wood plank.
Slope Range:	2":12" or greater
Maximum Uplift Pressure:	The maximum allowable design pressure for the 24" wide panel shall be **-57.5 psf.**

Deck Attachment: In accordance with applicable building code, but in no case it shall be less than # 8 x 1¾" screws or 8d annular ring shank nails spaced at 6" o.c. In re-roofing, where deck is less than $^{19}/_{32}$" thick (minimum $^{15}/_{32}$") the above attachment method must be in addition to existing attachment.

Underlayment: Minimum underlayment shall be an ASTM D 226 Type II installed with a minimum 4" side-lap and 6" end-laps. Underlayment shall be fastened with corrosion resistant tin-caps and 12 gauge 1-¼" annular ring-shank nails, spaced 6" o.c. at all laps and two staggered rows 12" o.c. in the field of the roll. Or, any approved underlayment having a current NOA.

Valleys: Valley construction shall be in compliance with Roofing Application Standard RAS 133 and with current published installation instructions and details in Southeastern Metal Manufacturing Metal Roofing Installation Manual.

Fire Barrier Board: Any approved fire barrier having a current NOA. Or for class A or B fire rating, install minimum ¼" thick Georgia Pacific "Dens Deck" (with current NOA) or minimum 4mm thick of Tritex, RockRoof (with current NOA) or $^{5}/_{8}$" water resistant type X gypsum sheathing with treated core and facer.

Metal Panels and Accessories: Install the "5V-Crimp Panels" and accessories in compliance with the current published installation instructions and details in Southeastern Metals Manufacturing Company's Installation Manual. Flashings, penetrations, valley construction and other details shall be constructed in compliance with Roofing Application Standard RAS133.

1. At the eave, rake, and ridge, fasteners shall be located not more than 3" away from the panel end.
2. The leading side edge of the panel should be the side with the anti-siphon groove; each panel side will overlap this channel to provide a capillary brake.
3. The panels shall be fastened with #9 x 2" metal roofing sealing washer screws in the crown of the inverted V ribs as shown in the details herein.
4. The panel's width fasteners shall be spaced at 11 ½" to the center rib, Then 12 ½" to the next, perpendicular to the slope, through the overlapping panel. The flat area of the panel as shown in the details herein.
5. The panels fastening pattern at the interior of the panel, shall be in rows spaced 16" o.c. running parallel to the slope of the roof.

"5-V CRIMP" METAL ROOF PANELS

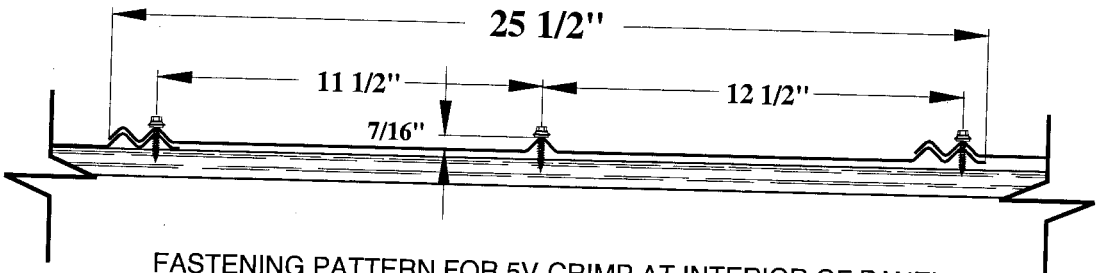

FASTENING PATTERN FOR 5V-CRIMP AT INTERIOR OF PANEL

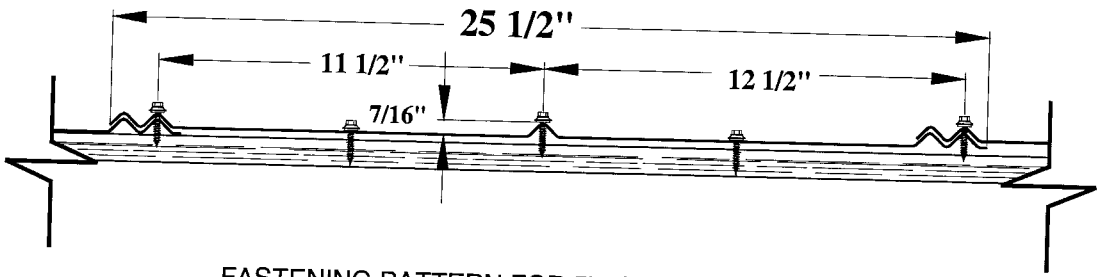

FASTENING PATTERN FOR 5V-CRIMP AT EAVE & RIDGE

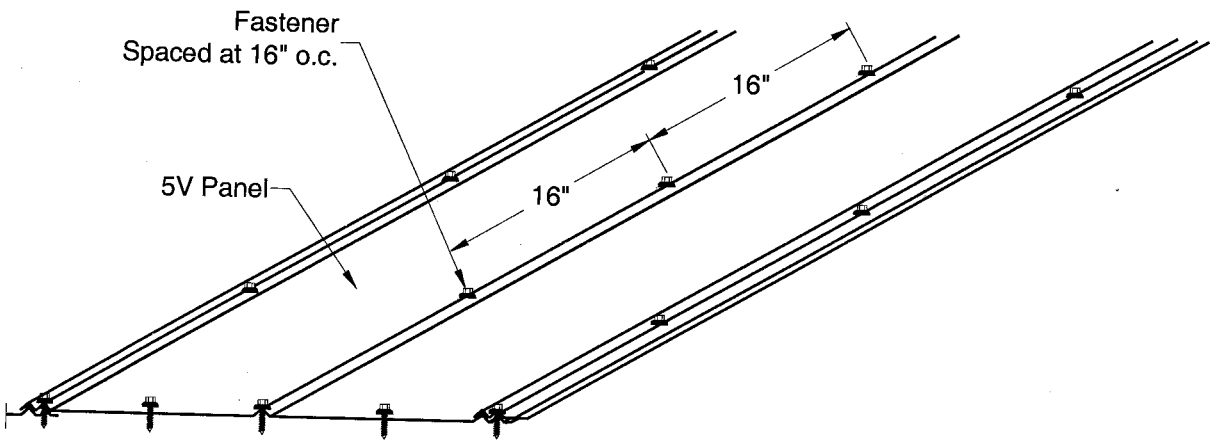

SYSTEM LIMITATIONS

1. Fire classification is not part of this acceptance; refer to a current Approved Roofing Materials Directory for fire ratings of this product.

2. The maximum designed pressure listed herein shall be applicable to all roof pressure zones (i.e. field, perimeters, and corners). Neither rational analysis, nor extrapolation shall be permitted for enhanced fastening at enhanced pressure zones (i.e. perimeters, extended corners and corners).

3. All panels shall be permanently labeled with the manufacturer's name and/or logo, and the following statement: "Miami-Dade County Product Control Approved.

4. All products listed herein shall have a quality assurance audit in accordance with the Florida Building Code and Rule 9B-72 of the Florida Administrative Code.

END OF THIS ACCEPTANCE