MIAMI-DADE COUNTY

BUILDING CODE COMPLIANCE OFFICE (BCCO)
PRODUCT CONTROL DIVISION

MIAMI-DADE COUNTY, FLORIDA
METRO-DADE FLAGLER BUILDING
140 WEST FLAGLER STREET, SUITE 1603
MIAMI, FLORIDA 33130-1563
(305) 375-2901 FAX (305) 375-2908
www.buildingcodeonline.com

NOTICE OF ACCEPTANCE (NOA)

T.M. Window & Door Co.
601 N.W. 12th Ave.
Pompano Beach, FL 33069

SCOPE:

This NOA is being issued under the applicable rules and regulations governing the use of construction materials. The documentation submitted has been reviewed by Miami-Dade County Product Control Division and accepted by the Board of Rules and Appeals (BORA) to be used in Miami Dade County and other areas where allowed by the Authority Having Jurisdiction (AHJ).

This NOA shall not be valid after the expiration date stated below. The Miami-Dade County Product Control Division (In Miami Dade County) and/or the AHJ (in areas other than Miami Dade County) reserve the right to have this product or material tested for quality assurance purposes. If this product or material fails to perform in the accepted manner, the manufacturer will incur the expense of such testing and the AHJ may immediately revoke, modify, or suspend the use of such product or material within their jurisdiction. BORA reserves the right to revoke this acceptance, if it is determined by Miami-Dade County Product Control Division that this product or material fails to meet the requirements of the applicable building code.

This product is approved as described herein, and has been designed to comply with the Florida Building Code, including the High Velocity Hurricane Zone.

DESCRIPTION: Series "230" Outswing Aluminum French Doors w/ Sidelites (Reinforced)

APPROVAL DOCUMENT: Drawing No. **W03-38,** titled "Series-230 Alum Out-Swing Door w/ Sidelites (LMI)", sheets 1 through 10 of 10, prepared by Al Farooq Corporation, dated 06/07/03 last revised on Jan 09, 2007, signed and sealed by Dr. Humayoun Farooq, P.E., bearing the Miami-Dade County Product Control Revision stamp with the Notice of Acceptance number and expiration date by the Miami-Dade County Product Control Division.

MISSILE IMPACT RATING: None: Approved Hurricane Protection Devices, complying w/FBC required

LABELING: Each unit shall bear a permanent label with the manufacturer's name or logo, city, state and following statement: "Miami-Dade County Product Control Approved", unless otherwise noted herein.

RENEWAL of this NOA shall be considered after a renewal application has been filed and there has been no change in the applicable building code negatively affecting the performance of this product.

TERMINATION of this NOA will occur after the expiration date or if there has been a revision or change in the materials, use, and/or manufacture of the product or process. Misuse of this NOA as an endorsement of any product, for sales, advertising or any other purposes shall automatically terminate this NOA. Failure to comply with any section of this NOA shall be cause for termination and removal of NOA.

ADVERTISEMENT: The NOA number preceded by the words Miami-Dade County, Florida, and followed by the expiration date may be displayed in advertising literature. If any portion of the NOA is displayed, then it shall be done in its entirety.

INSPECTION: A copy of this entire NOA shall be provided to the user by the manufacturer or its distributors and shall be available for inspection at the job site at the request of the Building Official.

This NOA **revises NOA # 03-0630.05** and consists of this page 1 and evidence page E-1, as well as approval document mentioned above.

The submitted documentation was reviewed by **Ishaq I. Chanda, P.E.**

PRODUCT CONTROL ACCEPTED

1/11/17

Arch Aluminum & Glass Company, Inc.

NOTICE OF ACCEPTANCE: EVIDENCE SUBMITTED

A. DRAWINGS (transferred from file # **03-0630.05**)

1. Manufacturer's die drawings and sections.
2. Drawing No. **W03-38,** titled "Series-230 Alum Out-Swing Door w/ Sidelites (LMI)", sheets 1 through 10 of 10, prepared by Al Farooq Corporation, dated 06/07/03 last revised on Jan 09, 2007, signed and sealed by Dr. Humayoun Farooq, P.E.

B. TESTS (transferred from file # **03-0630.05**) original test conducted per SFBC, PA202-94 now known as TAS202-94.

1. Test reports on 1) Air Infiltration Test, per FBC, TAS 202-94
   2) Uniform Static Air Pressure Test, Loading per FBC, TAS 202-94
   3) Water Resistance Test, per FBC, TAS 202-94 (See NOA limitation)
   4) Forced Entry Test, per FBC 2411 3.2.1 and TAS 202-94

Along with installation diagram of an outswing doors w\sidelite prepared by Certified Testing Laboratories, Test Report No.**CTLA-136W-1, 2,3,4,5,6** dated 12/03/96 thru 12/07/96, signed and sealed by Ramesh Patel, P.E. (Test report was revised by addendum letter dated 07-16-1999, issued by CTL, signed and sealed by Ramesh Patel, P.E.)

C. CALCULATIONS (transferred from file # **03-0630.05**)

1. Anchor calculations and structural analysis, complying with FBC-2004, prepared by Al-Farooq Corporation, dated 08/22/06 and last revised on Jan 08, 2007, signed and sealed by Dr. Humayoun Farooq, P.E.
2. Structural performance, comparative analysis and anchor verification calculations, dated November 12, 2001, prepared by Al-Farooq Corporation, signed and sealed by Dr. Humayoun Farooq, P.E. (transferred from file # **03-0630.05**)
3. Structural performance, comparative analysis and anchor verification calculations dated Sept. 22, 1999 sheet 1 thru 127 of 127 and revise on May 30, 2000 (Computer generated). Also additional supporting calculations dated 12-20-99, 04-22-2000, 05-18-2000 and May 30th, 2000, prepared, signed and sealed by Ballard L. Argus, P.E. (transferred from file # 99-0902.02)
4. Glazing complies with ASTM E1300- 02

D. QUALITY ASSURANCE

1. Miami Dade Building Code Compliance Office (BCCO).

E. MATERIAL CERTIFICATIONS

1. None

F. STATEMENTS (transferred from file # **03-0630.05**)

1. Statement letter of conformance and no financial interest, prepared by Al Farooq Corporation, dated 06/10/06 & 08-21-06 respectively, signed and sealed by Dr. Humayoun Farooq, P.E.
2. Statement letter of compliance, part of above referenced test reports.
3. Addendum letter to test report CTLA-136W-1, 2, 3, 4, 5& 6 dated July 16, 1999, prepared by Certified Testing Laboratories, signed by Jim Blakely.

G. OTHER

1. This **renews NOA # 03-0630.05** expiring June 29, 2008.
2. Previous associated file to this approval is NOA(s) # 99-0902.02.

Ishaq I. Chanda

Ishaq I. Chanda, P.E.
Product Control Examiner
NOA No 06-1016.02
Expiration Date: June 29, 2008
Approval Date: February 08, 2007

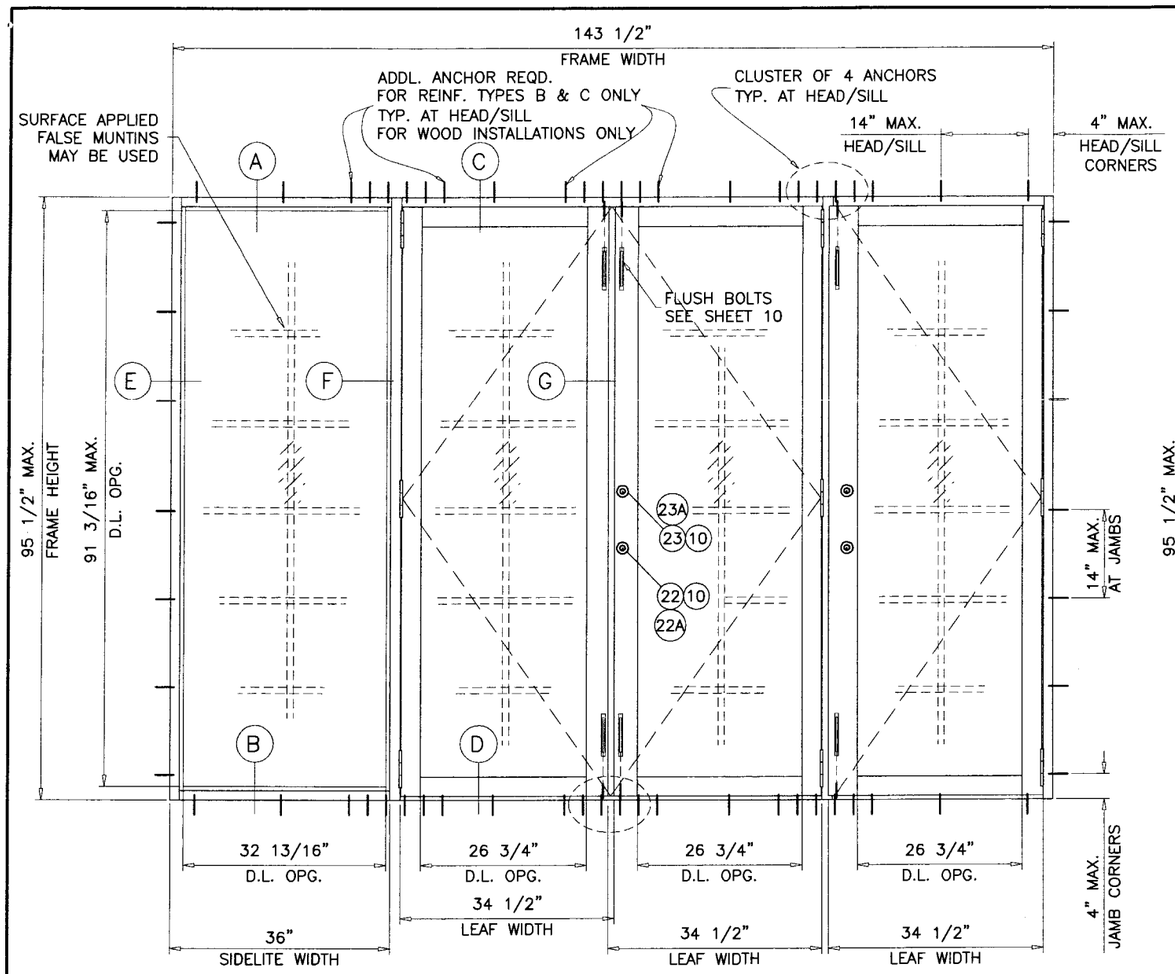

(OXXO)

TYPICAL ELEVATION

TESTED UNIT

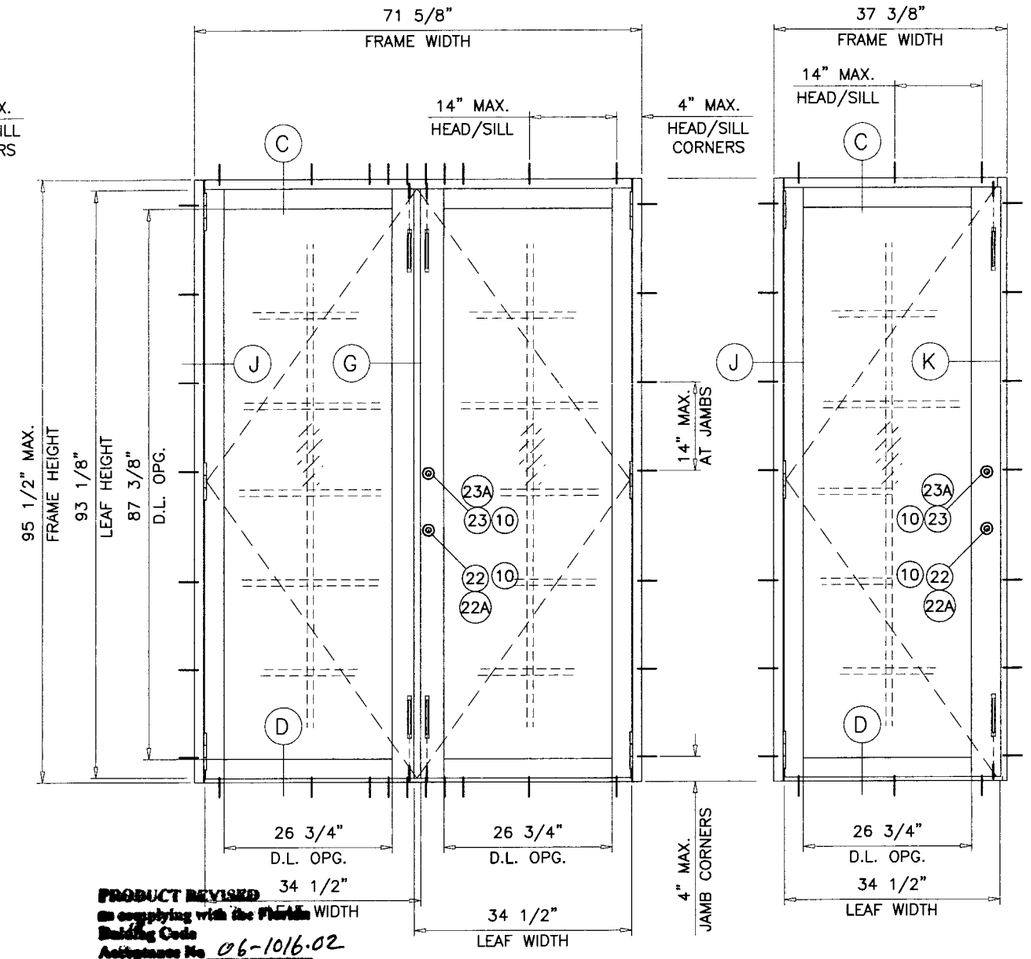

(XX)

(X)

PRODUCT REVISED
in complying with the Florida Building Code
Acceptance No. 06-1016.02
Expiration Date JUNE 29, 2008
By Ishan I. Chanda
Miami Dade Product Control Division

DOORS/SIDELITES NOT RATED FOR IMPACT.

INSTALLATION OF THIS PRODUCT IN THE HVHZ AREA REQUIRES THE USE OF APPROVED SHUTTERS OR EXTERNAL PROTECTION DEVICES COMPLYING WITH HVHZ REQUIREMENTS.

INSTALLATION OF THIS SYSTEM OUTSIDE THE HVHZ AREA SHALL MEET THE APPLICABLE REQUIREMENTS FOR WIND BORNE DEBRIS PROTECTION.

SERIES-230 ALUM OUT-SWING DOOR W/ SIDELITES

APPROVAL APPLIES TO SINGLE (X) AND DOUBLE (XX) LEAF DOORS WITH OR WITHOUT SIDELITES.
SIDE LITES CAN BE ON ONE OR BOTH SIDES OF DOOR.
SEE SHEETS 2 & 3 FOR DESIGN LOAD CAPACITIES.

THIS PRODUCT HAS BEEN DESIGNED AND TESTED TO COMPLY WITH THE REQUIREMENTS OF THE FLORIDA BUILDING CODE 2004 EDITION INCLUDING HIGH VELOCITY HURRICANE ZONE (HVHZ).

WOOD BUCKS BY OTHERS, MUST BE ANCHORED PROPERLY TO TRANSFER LOADS TO THE STRUCTURE.

ANCHORS SHALL BE AS LISTED, SPACED AS SHOWN ON DETAILS, ANCHORS EMBEDMENT TO BASE MATERIAL SHALL BE BEYOND WALL DRESSING OR STUCCO.

ANCHORING OR LOADING CONDITIONS NOT SHOWN IN THESE DETAILS ARE NOT PART OF THIS APPROVAL.

A LOAD DURATION INCREASE IN ALLOWABLE STRESS IS USED IN DESIGN OF ANCHORS INTO WOOD ONLY.

MATERIALS INCLUDING BUT NOT LIMITED TO STEEL/METAL SCREWS, THAT COME INTO CONTACT WITH OTHER DISSIMILAR MATERIALS SHALL MEET THE REQUIREMENTS OF 2004 FLORIDA BLDG. CODE SECTION 2003.8.4.

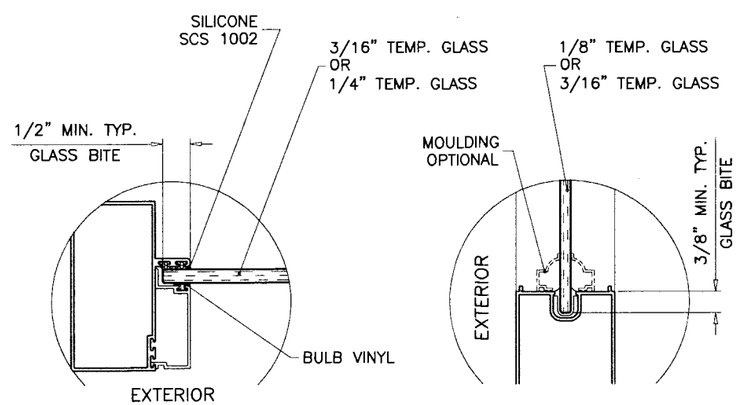

GLAZING DETAILS

D.L.O. HEIGHT (SIDELITE) = FRAME HEIGHT – 4.312"
D.L.O. WIDTH (SIDELITE) = SIDELITE WIDTH – 3.187"
D.L.O. HEIGHT (DOOR) = LEAF HEIGHT – 5.75"
D.L.O. WIDTH (DOOR) = LEAF WIDTH – 7.75"

Engr: DR. HUMAYOUN FAROOQ
STRUCTURES
FLA. PE # 16557
C.A.N. 3538

JAN 0 9 2007

AL-FAROOQ CORPORATION
ENGINEERS & PRODUCT DEVELOPMENT
1235 S.W. 87 AVE
MIAMI, FLORIDA 33174
TEL. (305) 264-8100 FAX. (305) 262-6978
COMP-ANL\W03-38TMW

SERIES-230 ALUM OUT-SWING DOOR W/ SIDELITES (N.I.)

TM WINDOW AND DOOR
601 N.W. 12TH AVE.
POMPANO BEACH, FL. 33069
TEL. (954) 781-5078 FAX. (954) 781-4430

revisions:

no	date	by	description
A	07.27.06		UPDATED FOR 2004 FBC
B	01.04.07		REV. PER BCCO COMMENTS

date: 06-07-03
scale: 1/2"=1'-0"
dr. by: HAMID
chk. by:

drawing no.
W03-38

CHART #1

DESIGN LOAD CAPACITY – PSF (SINGLE LEAF DOORS WITH 3-1/8" HIGH RISE SILL) SEE NOTE BELOW FOR STD. SILL

FRAME HEIGHT INCHES	FRAME WIDTH FT.-IN.	LEAF WIDTH INCHES	1/8" TEMP. GLASS								3/16" TEMP. GLASS							
			REINFORCING 'N'		REINFORCING 'A'		REINFORCING 'B'		REINFORCING 'C'		REINFORCING 'N'		REINFORCING 'A'		REINFORCING 'B'		REINFORCING 'C'	
			EXT. (+)	INT. (–)	EXT. (+)	INT. (–)	EXT. (+)	INT. (–)	EXT. (+)	INT. (–)	EXT. (+)	INT. (–)	EXT. (+)	INT. (–)	EXT. (+)	INT. (–)	EXT. (+)	INT. (–)
79-1/2	2'-8"	28-5/8	73.1	73.1	80.0	73.1	80.0	123.4	80.0	123.4	73.1	73.1	80.0	73.1	80.0	124.2	80.0	175.4
	3'-0"	32-5/8	64.1	64.1	70.5	64.1	80.0	100.4	80.0	100.4	64.1	64.1	70.5	64.1	80.0	108.9	80.0	153.8
	3'-2"	34-5/8	60.4	60.4	66.4	60.4	80.0	95.2	80.0	95.2	60.4	60.4	66.4	60.4	80.0	102.6	80.0	144.9
95-1/2	2'-8"	28-5/8	60.5	60.5	66.6	60.5	80.0	102.9	80.0	111.1	60.5	60.5	66.6	60.5	80.0	102.9	80.0	145.3
	3'-0"	32-5/8	53.1	53.1	58.4	53.1	80.0	85.5	80.0	85.5	53.1	53.1	58.4	53.1	80.0	90.2	80.0	127.4
	3'-2"	34-5/8	50.0	50.0	55.0	50.0	78.3	78.3	78.3	78.3	50.0	50.0	55.0	50.0	80.0	85.0	80.0	120.0

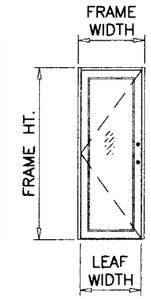

(X)

CHART #2

DESIGN LOAD CAPACITY – PSF (DUAL LEAF DOORS WITH 3-1/8" HIGH RISE SILL) SEE NOTE BELOW FOR STD. SILL

FRAME HEIGHT INCHES	FRAME WIDTH FT.-IN.	LEAF WIDTH INCHES	1/8" TEMP. GLASS								3/16" TEMP. GLASS							
			REINFORCING 'N'		REINFORCING 'A'		REINFORCING 'B'		REINFORCING 'C'		REINFORCING 'N'		REINFORCING 'A'		REINFORCING 'B'		REINFORCING 'C'	
			EXT. (+)	INT. (–)	EXT. (+)	INT. (–)	EXT. (+)	INT. (–)	EXT. (+)	INT. (–)	EXT. (+)	INT. (–)	EXT. (+)	INT. (–)	EXT. (+)	INT. (–)	EXT. (+)	INT. (–)
79-1/2	5'-0"	28-5/8	73.1	73.1	80.0	73.1	80.0	123.4	80.0	123.4	73.1	73.1	80.0	73.1	80.0	124.2	80.0	175.4
	5'-6"	32-5/8	66.1	66.1	72.7	66.1	80.0	103.9	80.0	103.9	66.1	66.1	72.7	66.1	80.0	112.4	80.0	153.8
	6'-0"	34-5/8	60.4	60.4	66.4	60.4	80.0	95.2	80.0	95.2	60.4	60.4	66.4	60.4	80.0	102.6	80.0	144.9
95-1/2	5'-0"	28-5/8	54.7	54.7	66.6	60.5	80.0	97.5	80.0	108.4	60.5	60.5	66.6	60.5	80.0	102.9	80.0	145.3
	5'-6"	32-5/8	51.1	51.1	60.2	54.8	80.0	84.7	80.0	90.6	54.8	54.8	60.2	54.8	80.0	93.1	80.0	127.4
	6'-0"	34-5/8	48.1	48.1	55.0	50.0	75.5	75.5	78.3	78.3	50.0	50.0	55.0	50.0	80.0	85.0	80.0	120.0

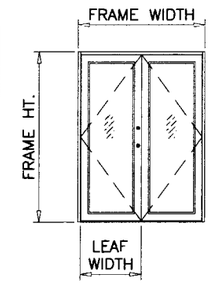

(XX)

CHARTS 1 SHOWS SINGLE LEAF DOOR CAPACITIES WITH HIGH RISE SILL.

CHARTS 2 SHOWS DUAL LEAF DOOR CAPACITIES WITH HIGH RISE SILL.

FOR STD. SILL HEIGHTS LIMIT EXTERIOR LOADS TO +53.3 PSF.

PRODUCT REVISED
as complying with the Florida Building Code
Acceptance No. 06-1016.02
Expiration Date JUNE 29, 2008
By Ishwar I. Chanda
Miami-Dade Product Control Division

NOTE:
GLASS CAPACITIES ON THIS SHEET ARE BASED ON ASTM E1300-02 (3 SEC. GUSTS) WITH REDUCTIONS FOR FLEXIBLE SUPPORTS TO COMPLY WITH SECTION 2403.2 OF FBC 2004 EDITION.

Engr: DR. HUMAYOUN FAROOQ
STRUCTURES
FLA. PE # 16557
C.A.N. 3538

JAN 0 9 2007

AL-FAROOQ CORPORATION
ENGINEERS & PRODUCT DEVELOPMENT
1235 S.W. 87 AVE
MIAMI, FLORIDA 33174
TEL. (305) 264-8100 FAX. (305) 262-6978
COMP-ANL\W03-38TMW

SERIES-230 ALUM OUT-SWING DOOR W/ SIDELITES (N.I.)

TM WINDOW AND DOOR
601 N.W. 12TH AVE.
POMPANO BEACH, FL. 33069
TEL. (954) 781-4430 FAX. (954) 781-5078

revisions:

no	date	by	description
A	07.27.06		UPDATED FOR 2004 FBC
B	01.04.07		REV. PER BCCO COMMENTS

date: 06-07-03
scale: 1/2"=1'-0"
dr. by: HAMID
chk. by:

drawing no.
W03-38

CHART #3

DESIGN LOAD CAPACITY – PSF (SIDELITES MULLED WITH SINGLE LEAF DOORS) EXT.(+) & INT.(–)																											
		3/16" TEMP. GLASS AT SIDELITE												1/4" TEMP. GLASS AT SIDELITE											
		REINFORCING 'N' & 'A'				REINFORCING 'B'				REINFORCING 'C'				REINFORCING 'N' & 'A'				REINFORCING 'B'				REINFORCING 'C'			
		SIDELITE WIDTH				SIDELITE WIDTH				SIDELITE WIDTH				SIDELITE WIDTH				SIDELITE WIDTH				SIDELITE WIDTH			
FRAME HEIGHT INCHES	DOOR WIDTH FT.–IN.	24 IN.	30 IN.	36 IN.	42 IN.	24 IN.	30 IN.	36 IN.	42 IN.	24 IN.	30 IN.	36 IN.	42 IN.	24 IN.	30 IN.	36 IN.	42 IN.	24 IN.	30 IN.	36 IN.	42 IN.	24 IN.	30 IN.	36 IN.	42 IN.
79–1/2"	2'–8"	54.0	48.6	44.2	40.5	118.1	106.3	96.6	88.5	166.5	131.2	107.2	101.6	54.0	48.6	44.2	40.5	118.1	106.3	96.6	88.5	166.5	149.9	136.2	124.9
	3'–0"	50.3	45.6	41.7	38.4	109.9	99.6	91.1	83.9	155.0	131.2	107.2	101.6	50.3	45.6	41.7	38.4	109.9	99.6	91.1	83.9	155.0	140.5	128.4	118.3
	3'–2"	48.6	44.2	40.5	37.4	106.3	96.6	88.5	81.7	149.9	131.2	107.2	101.6	48.6	44.2	40.5	37.4	106.3	96.6	88.5	81.7	149.9	136.2	124.9	115.2
95–1/2"	2'–8"	31.2	28.0	25.5	–	81.8	73.6	66.9	–	115.4	103.9	89.6	–	31.2	28.0	25.5	–	81.8	73.6	66.9	–	115.4	103.9	94.4	–
	3'–0"	29.0	26.3	24.0	–	76.2	69.0	63.1	–	107.4	97.4	89.0	–	29.0	26.3	24.0	–	76.2	69.0	63.1	–	107.4	97.4	89.0	–
	3'–2"	28.0	25.5	23.4	–	73.6	66.9	61.3	–	103.9	94.4	86.5	–	28.0	25.5	23.4	–	73.6	66.9	61.3	–	103.9	94.4	86.5	–

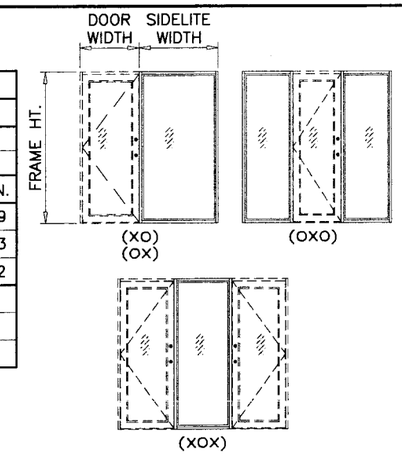

CHART #4

DESIGN LOAD CAPACITY – PSF (SIDELITES MULLED WITH DUAL LEAF DOORS) EXT.(+) & INT.(–)																											
		3/16" TEMP. GLASS AT SIDELITE												1/4" TEMP. GLASS AT SIDELITE											
		REINFORCING 'N' & 'A'				REINFORCING 'B'				REINFORCING 'C'				REINFORCING 'N' & 'A'				REINFORCING 'B'				REINFORCING 'C'			
		SIDELITE WIDTH				SIDELITE WIDTH				SIDELITE WIDTH				SIDELITE WIDTH				SIDELITE WIDTH				SIDELITE WIDTH			
FRAME HEIGHT INCHES	DOOR WIDTH FT.–IN.	24 IN.	30 IN.	36 IN.	42 IN.	24 IN.	30 IN.	36 IN.	42 IN.	24 IN.	30 IN.	36 IN.	42 IN.	24 IN.	30 IN.	36 IN.	42 IN.	24 IN.	30 IN.	36 IN.	42 IN.	24 IN.	30 IN.	36 IN.	42 IN.
79–1/2"	5'–0"	54.2	48.7	44.3	40.6	118.4	106.5	96.8	88.7	167.0	131.2	107.2	101.6	54.2	48.7	44.3	40.6	118.4	106.5	96.8	88.7	167.0	150.3	136.5	125.1
	5'–6"	51.3	46.4	42.4	39.0	112.2	101.5	92.6	85.2	158.2	131.2	107.2	101.6	51.3	46.4	42.4	39.0	112.2	101.5	92.6	85.2	158.2	143.1	130.6	120.1
	6'–0"	48.7	44.3	40.6	37.5	106.5	96.8	88.7	81.9	150.3	131.2	107.2	101.6	48.7	44.3	40.6	37.5	106.5	96.8	88.7	81.9	150.3	136.5	125.1	115.5
95–1/2"	5'–0"	31.3	28.1	25.6	–	82.1	73.8	67.1	–	115.8	104.1	89.6	–	31.3	28.1	25.6	–	82.1	73.8	67.1	–	115.8	104.1	94.6	–
	5'–6"	29.6	26.8	24.4	–	77.7	70.3	64.2	–	109.6	99.2	89.6	–	29.6	26.8	24.4	–	77.7	70.3	64.2	–	109.6	99.2	90.5	–
	6'–0"	28.1	25.6	23.4	–	73.8	67.1	61.5	–	104.1	94.6	86.7	–	28.1	25.6	23.4	–	73.8	67.1	61.5	–	104.1	94.6	86.7	–

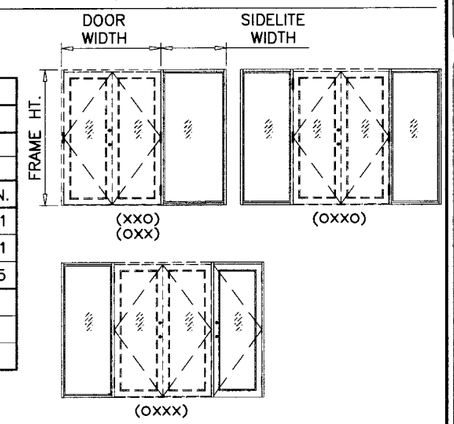

CHARTS 3 & 4 SHOWS MAXIMUM LOAD CAPACITY FOR GIVEN SIDELITE MULLED UNITS.

FOR DOORS WITH SIDELITES LIMIT DESIGN LOADS TO LOWER VALUES OF CHARTS 1 OR 2 AND CHARTS 3 OR 4.

PRODUCT REVISED
in complying with the Florida Building Code
Acceptance No. 06-1016.02
Expiration Date June 29, 2008
By Ishan I. Chande
Miami Dade Product Control Division

NOTE:
GLASS CAPACITIES ON THIS SHEET ARE BASED ON ASTM E1300–02 (3 SEC. GUSTS) WITH REDUCTIONS FOR FLEXIBLE SUPPORTS TO COMPLY WITH SECTION 2403.2 OF FBC 2004 EDITION.

Engr: DR. HUMAYOUN FAROOQ
STRUCTURES
FLA. PE # 16557
C.A.N. 3538

JAN 0 9 2007

AL-FAROOQ CORPORATION
ENGINEERS & PRODUCT DEVELOPMENT
1235 S.W. 87 AVE
MIAMI, FLORIDA 33174
TEL. (305) 264-8100 FAX. (305) 262-6978

COMP–ANL\W03–38TMW

SERIES–230 ALUM OUT–SWING DOOR W/ SIDELITES (N.I.)

TM WINDOW AND DOOR
601 N.W. 12TH AVE.
POMPANO BEACH, FL. 33069
TEL. (954) 781–4430 FAX. (954) 781–5078

revisions:

no	date	by	description
A	07.27.06		UPDATED FOR 2004 FBC
B	01.04.07		REV. PER BCCO COMMENTS

date: 06–07–03
scale: 1/2"=1'–0"
dr. by: HAMID
chk. by:

drawing no.
W03–38

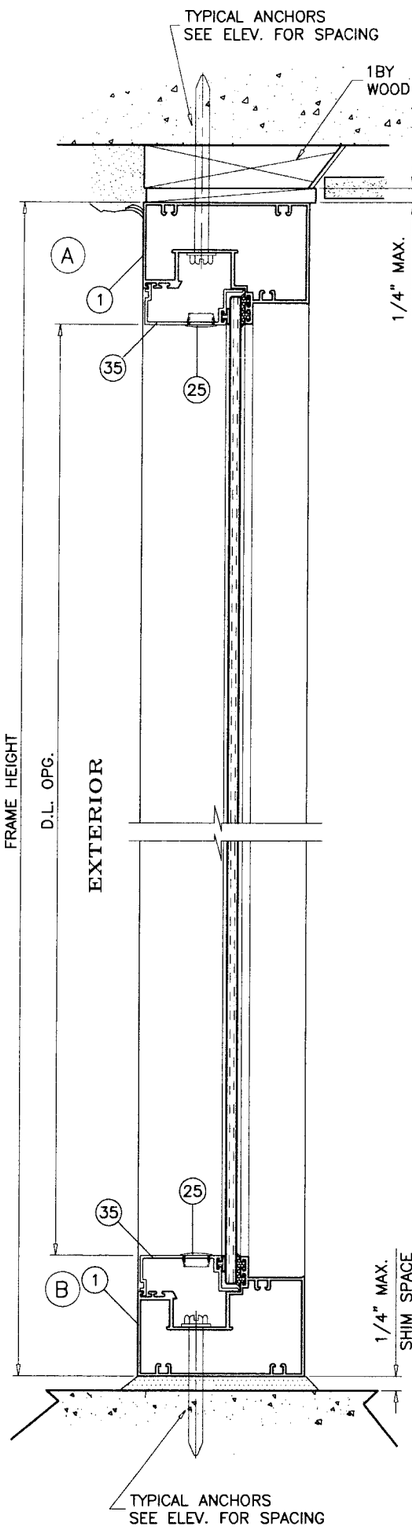

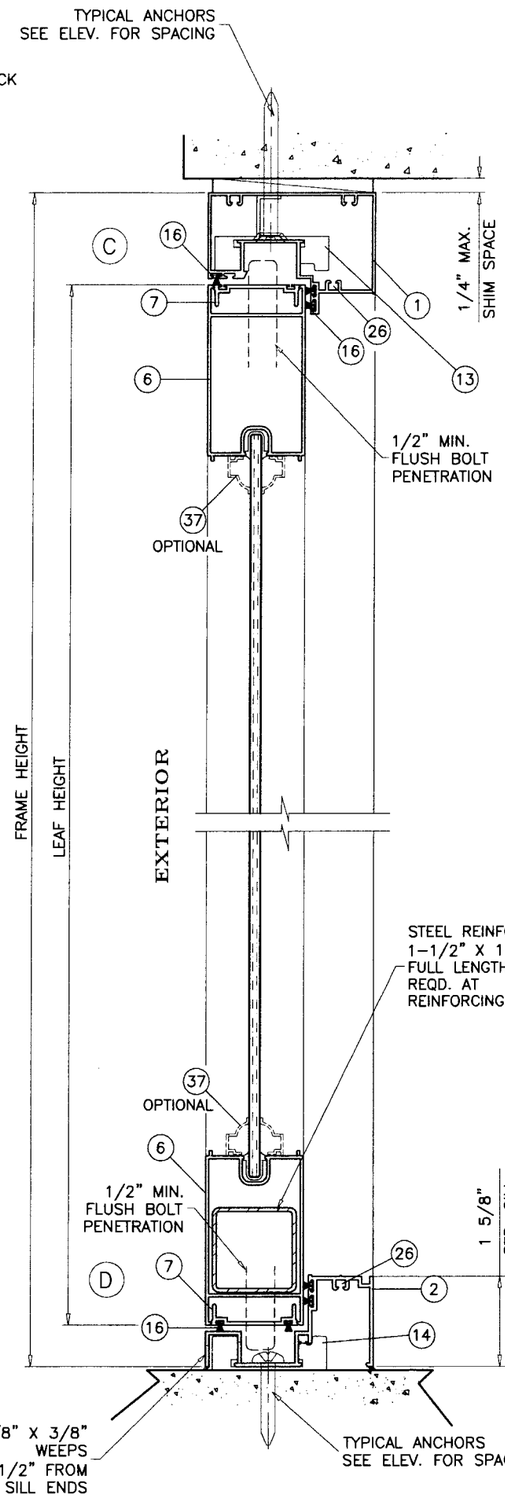

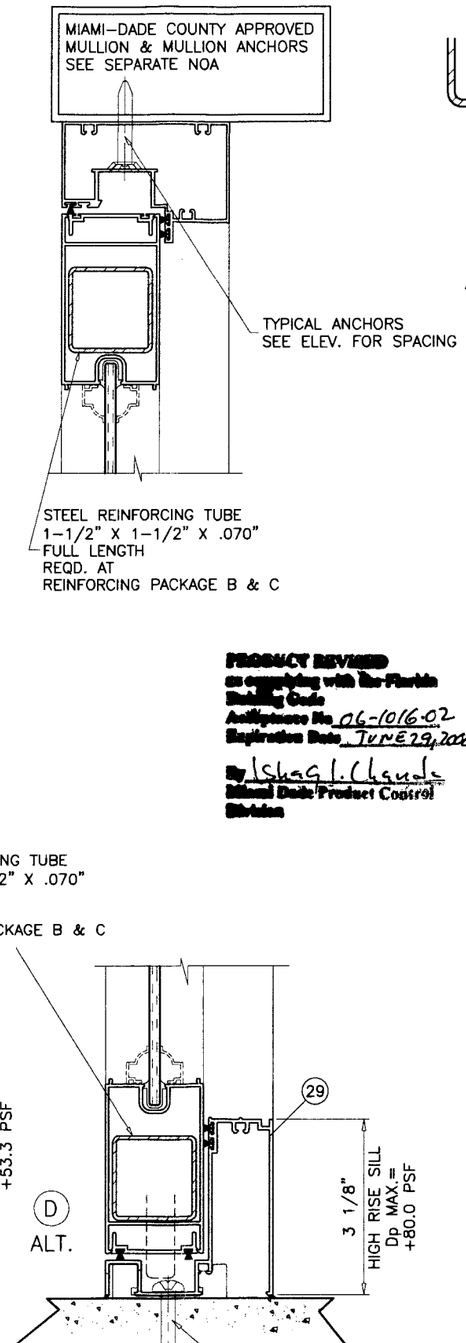

OPTIONAL HI-RISE SILL

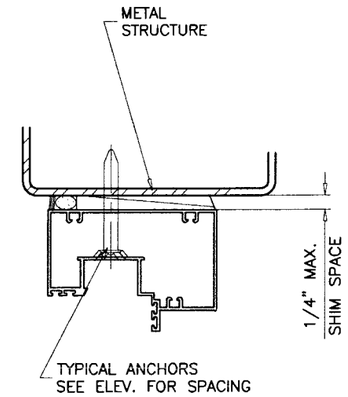

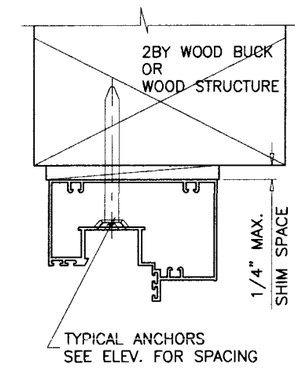

PRODUCT REVIEWED
In compliance with the Florida Building Code
Application No. 06-1016.02
Expiration Date June 29, 2008
By Ishaq I. Chanda
Miami-Dade Product Control Division

WOOD BUCKS AND METAL STRUCTURE NOT BY TM WINDOWS MUST SUSTAIN LOADS IMPOSED BY GLAZING SYSTEM AND TRANSFER THEM TO THE BUILDING STRUCTURE.

TYPICAL ANCHORS: SEE ELEV. FOR SPACING

1/4" TAPCONS BY ELCO

INTO 2BY WOOD BUCKS OR WOOD STRUCTURES
1-1/2" MIN. PENETRATION INTO WOOD

THRU 1BY BUCKS INTO CONC. OR MASONRY
1-1/4" MIN. EMBED INTO CONC. OR MASONRY

DIRECTLY INTO CONC. OR MASONRY
1-1/4" MIN. EMBED INTO CONC. OR MASONRY

#14 SMS OR SELF DRILLING SCREWS (GRADE 5 CRS)

INTO METAL STRUCTURES

STEEL : 12 GA. MIN. (Fy = 36 KSI MIN.)
ALUMINUM : 1/8" THK. MIN. (6063-T5 MIN.)
(STEEL IN CONTACT WITH ALUMINUM TO BE PLATED OR PAINTED)

#14 SMS OR SELF DRILLING SCREWS (GRADE 5 CRS)

INTO DADE COUNTY APPROVED MULLIONS (MIN. THK. = 1/8")
(NO SHIM SPACE)

TYPICAL EDGE DISTANCE

INTO CONCRETE AND MASONRY = 2-1/2" MIN.
INTO WOOD STRUCTURE = 1" MIN.
INTO METAL STRUCTURE = 5/8" MIN.

SEALANTS:

FRAME CORNERS AND GLAZING BEAD TO PANEL SEALED WITH WHITE COLORED SEALANT.
SEAMS BETWEEN MULLION AND JAMBS SEALED WITH SILICONE.

Engr: DR. HUMAYOUN FAROOQ
STRUCTURES
FLA. PE # 16557
C.A.N. 3538
JAN 09 2007

AL-FAROOQ CORPORATION
ENGINEERS & PRODUCT DEVELOPMENT
1235 S.W. 87 AVE
MIAMI, FLORIDA 33174
TEL. (305) 264-8100 FAX. (305) 262-6978
COMP-ANL\W03-38TMW

SERIES-230 ALUM OUT-SWING DOOR W/ SIDELITES (N.I.)

TM WINDOW AND DOOR
601 N.W. 12TH AVE.
POMPANO BEACH, FL. 33069
TEL. (954) 781-4430 FAX. (954) 781-5078

revisions:			
no	date	by	description
A	07.27.06		UPDATED FOR 2004 FBC
B	01.04.07		REV. PER BCCO COMMENTS

date: 06-07-03
scale: 3/8" = 1"
dr. by: HAMID
chk. by:

drawing no.
W03-38

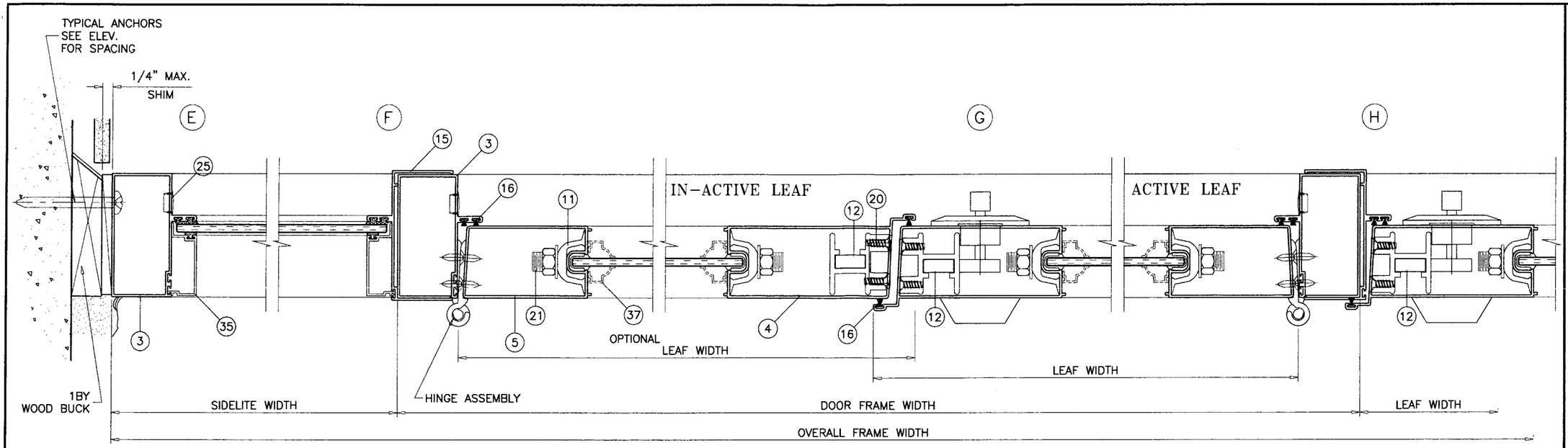

EXTERIOR

REINFORCING PACKAGE 'N'

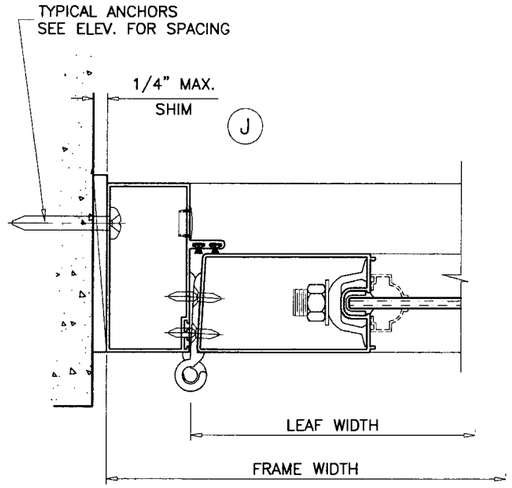

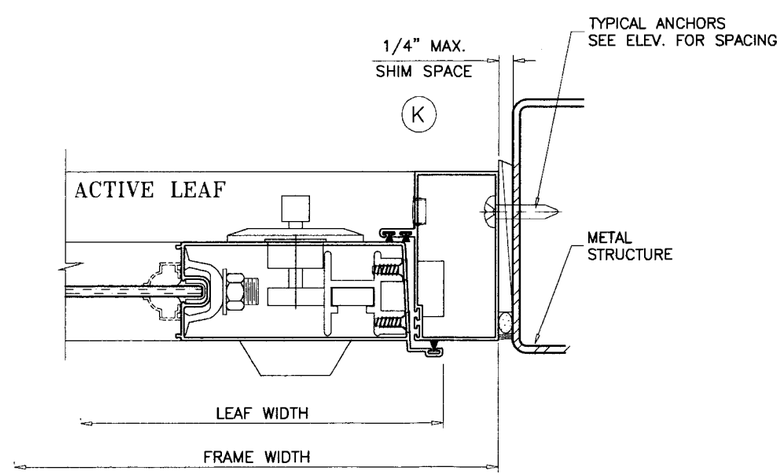

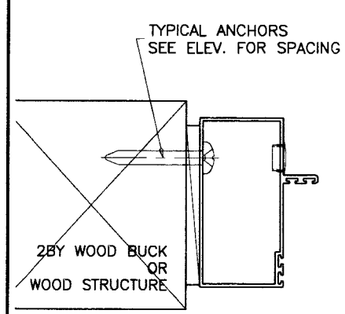

PRODUCT REVISED
as complying with the Florida Building Code
Acceptance No. 06-1016.02
Expiration Date June 29, 2008
By Ishwar J. Chandra
Miami Dade Product Control Division

HINGES:

7-5/8" LONG ALUM BUTT HINGES
2 PER LEAF FOR REINF. 'N' & 'A', AT 8" FROM EACH END
3 PER LEAF FOR REINF. 'B' & 'C', AT 4-1/2" FROM EACH END AND AT MIDSPAN.

LOCKS:

STANDARD STEEL THROW BOLT LOCK, KEY OPERATED ON EXTERIOR AND THUMB TURN ON INTERIOR
AT EACH ACTIVE LEAF LOCK STILE, 47-3/4" FROM BOTTOM

CONVENTIONAL LOCKSET WITH KNOB, KEY OPERATED ON EXTERIOR AND THUMB TURN ON INTERIOR
AT EACH ACTIVE LEAF LOCK STILE, 39-1/2" FROM BOTTOM

MANUALLY OPERATED CONCEALED FLUSH BOLTS
AT TOP & BOTTOM OF EACH LEAF LOCK STILE

(FLUSH BOLTS AT TOP & BOTTOM OF ACTIVE AND INACTIVE LEAFS TO BE ENGAGED DURING PERIODS OF HURRICANE WARNING)

Engr: DR. HUMAYOUN FAROOQ
STRUCTURES
FLA. PE # 16557
C.A.N. 3538

JAN 10 9 2007

AL-FAROOQ CORPORATION
ENGINEERS & PRODUCT DEVELOPMENT
1235 S.W. 87 AVE
MIAMI, FLORIDA 33174
TEL. (305) 264-8100 FAX. (305) 262-6978
COMP-ANL\W03-38TMW

SERIES-230 ALUM OUT-SWING DOOR W/ SIDELITES (N.I.)

TM WINDOW AND DOOR
601 N.W. 12TH AVE.
POMPANO BEACH, FL. 33069
TEL. (954) 781-4430 FAX. (954) 781-5078

revisions:

no	date	by	description
A	07.27.06		UPDATED FOR 2004 FBC
B	01.04.07		NO CHANGE THIS SHEET

date: 06-07-03
scale: 3/8" = 1"
dr. by: HAMID
chk. by:

drawing no.
W03-38

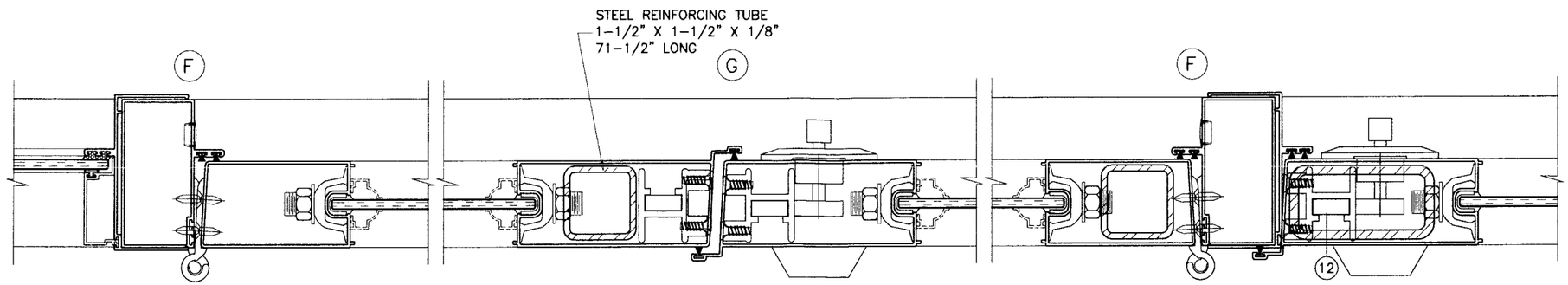

REINFORCING PACKAGE 'A'

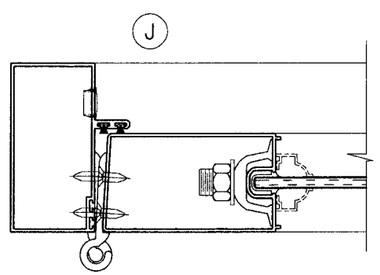

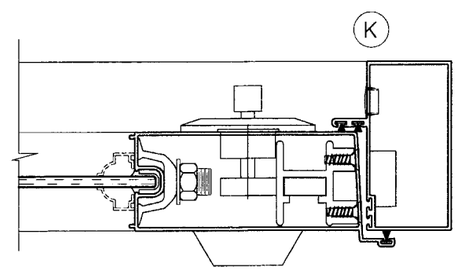

PRODUCT REVISED
as complying with the Florida Building Code
Acceptance No 06-1016.02
Expiration Date JUNE 29, 2008
By Shang J. Chandra
Miami Dade Product Control Division

Engr: DR. HUMAYOUN FAROOQ
STRUCTURES
FLA. PE # 16557
C.A.N. 3538

JAN 18 2007

AL-FAROOQ CORPORATION
ENGINEERS & PRODUCT DEVELOPMENT
1235 S.W. 87 AVE
MIAMI, FLORIDA 33174
TEL. (305) 264-8100 FAX. (305) 262-6978

COMP-ANL\W03-38TMW

SERIES-230 ALUM OUT-SWING DOOR W/ SIDELITES (N.I.)

TM WINDOW AND DOOR
601 N.W. 12TH AVE.
POMPANO BEACH, FL. 33069
TEL. (954) 781-4430 FAX. (954) 781-5078

revisions:

no	date	by	description
A	07.27.06		NO CHANGE THIS SHEET
B	01.04.07		REV. PER BCCO COMMENTS

date: 06-07-03
scale: 3/8" = 1"
dr. by: HAMID
chk. by:

drawing no.
W03-38

sheet 6 of 10

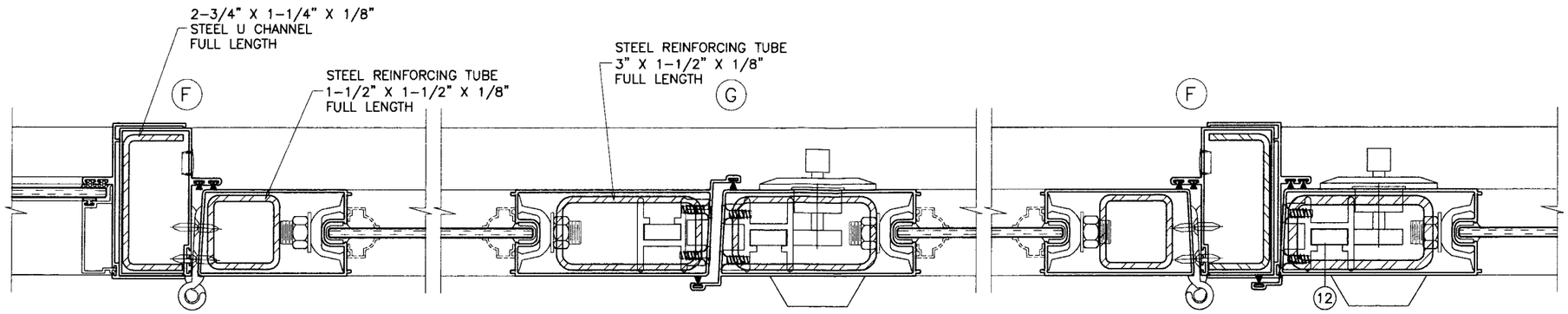

REINFORCING PACKAGE 'B'

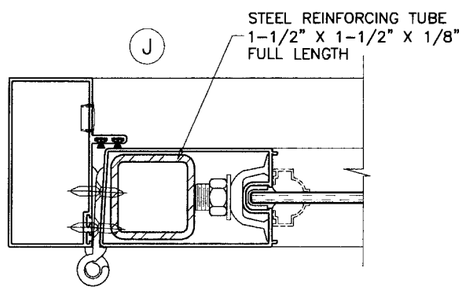

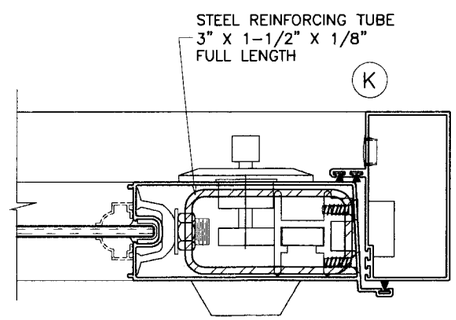

PRODUCT REVISED
as complying with the Florida Building Code
Acceptance No 06-1016.02
Expiration Date JUNE 25, 2008
By Ishaq I. Chanda
Miami Dade Product Control Division

Engr: DR. HUMAYOUN FAROOQ
STRUCTURES
FLA. PE # 16557
C.A.N. 3538

JAN 8 9 2007

AL-FAROOQ CORPORATION
ENGINEERS & PRODUCT DEVELOPMENT
1235 S.W. 87 AVE
MIAMI, FLORIDA 33174
TEL. (305) 264-8100 FAX. (305) 262-6978

COMP-ANL\W03-38TMW

SERIES-230 ALUM OUT-SWING DOOR W/ SIDELITES (N.I.)

TM WINDOW AND DOOR
601 N.W. 12TH AVE.
POMPANO BEACH, FL. 33069
TEL. (954) 781-4430 FAX. (954) 781-5078

revisions:

no	date	by	description
B	01.04.07		REV. PER BCCO COMMENTS

date: 06-07-03
scale: 3/8" = 1"
dr. by: HAMID
chk. by:

drawing no.
W03-38

sheet 7 of 10

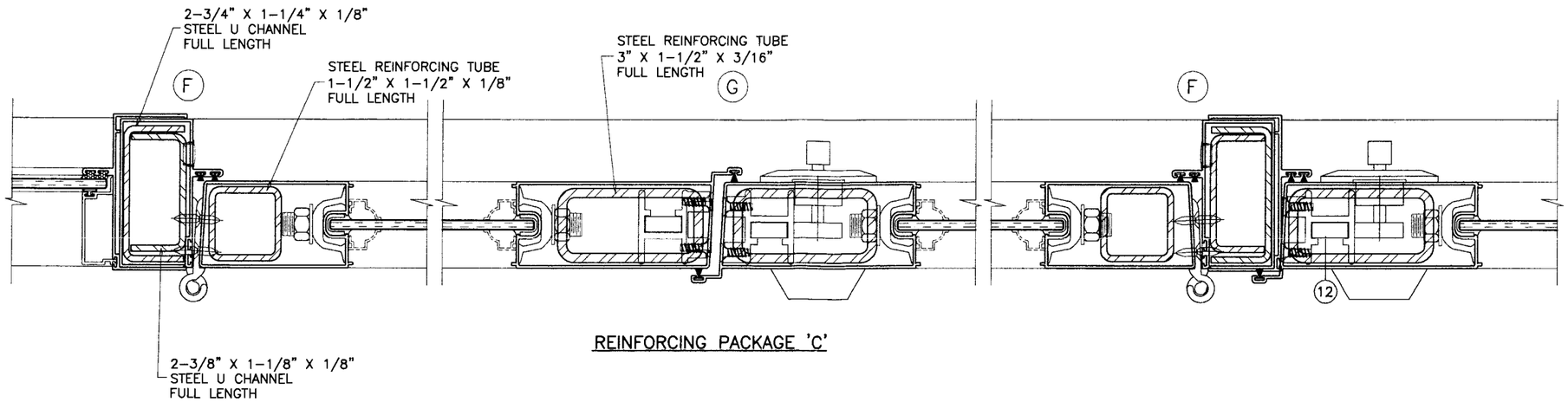

REINFORCING PACKAGE 'C'

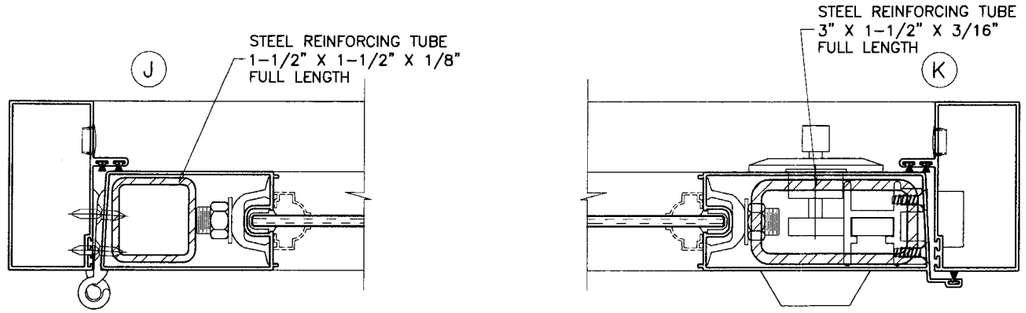

PRODUCT REVISED
as complying with the Florida
Building Code
Acceptance No 06-1016-02
Expiration Date JUNE 29, 2008
By Ishag I. Chande
Miami Dade Product Control
Division

Engr: DR. HUMAYOUN FAROOQ
STRUCTURES
FLA. PE # 16557
C.A.N. 3538

JAN 0 9 2007

AL-FAROOQ CORPORATION
ENGINEERS & PRODUCT DEVELOPMENT
1235 S.W. 87 AVE
MIAMI, FLORIDA 33174
TEL. (305) 264-8100 FAX. (305) 262-6978

COMP-ANL\W03-38TMW

SERIES-230 ALUM OUT-SWING DOOR W/ SIDELITES (N.I.)

TM WINDOW AND DOOR
601 N.W. 12TH AVE.
POMPANO BEACH, FL. 33069
TEL. (954) 781-4430 FAX. (954) 781-5078

revisions:

no	date	by	description
B	01.04.07		REV. PER BCCO COMMENTS

date: 06-07-03
scale: 3/8" = 1"
dr. by: HAMID
chk. by:

drawing no.
W03-38

sheet 8 of 10

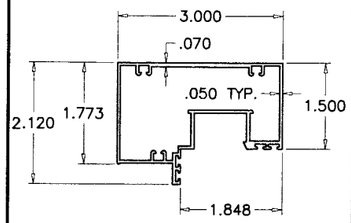

FRAME HEAD
TM-038

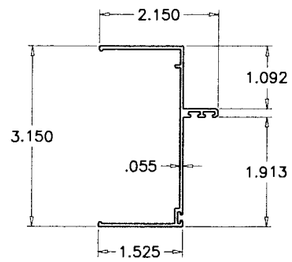

FRAME JAMB ADAPTER
TM-037

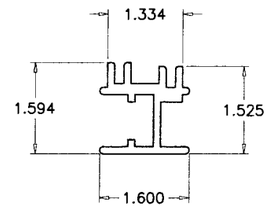

FLUSH BOLT GUIDE
GW-27646

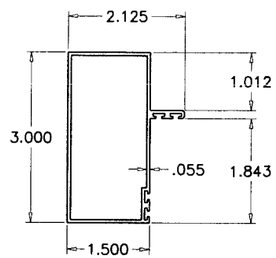

DOOR JAMB/SIDELITE FRAME
GW 36572

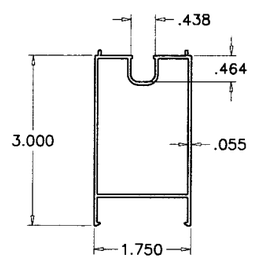

DOOR TOP & BOTTOM RAIL
GW-36570

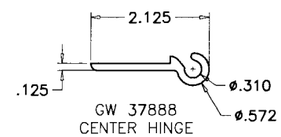

GW 37888
CENTER HINGE

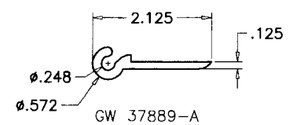

GW 37889-A
OUTER HINGE

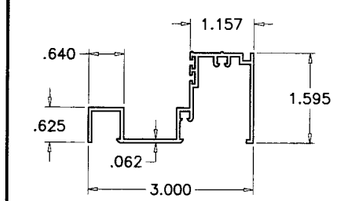

FRAME SILL
GW-28615

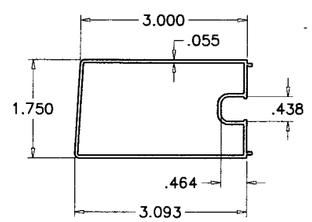

DOOR HINGE STILE
GW-36571

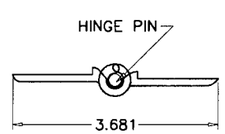

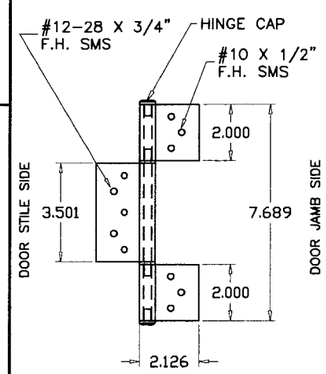

HINGE ASSEMBLY

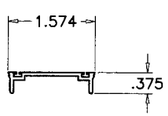

WEATHER-STRIP ADAPTER
GW-31826

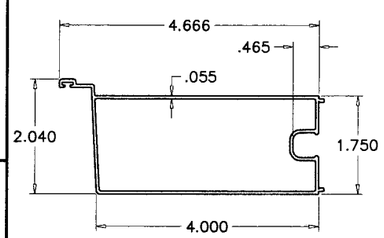

DOOR LEAF STILE
GW-34601

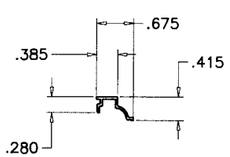

DECORATIVE MOULDING
GW-36737

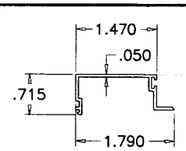

SIDELITE GLAZING BEAD
TM-044

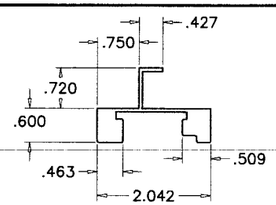

HEAD

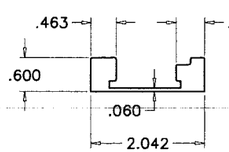

SILL

REINFORCING BAR
GW-37056

ITEM #	PART #	QUANTITY	DESCRIPTION	MATERIAL	MANF./SUPPLIER/REMARKS
1	TM-038	1	FRAME HEAD	6063-T6	–
2	GW 28615	1	FRAME SILL	6063-T6	–
2A	GW 37319	1	ALT. FRAME SILL	6063-T6	–
3	GW 36572	2	FRAME JAMB	6063-T6	–
4	GW-34601	1	PANEL LOCK STILE	6063-T6	–
5	GW-36571	1	PANEL HINGE STILE	6063-T6	–
6	GW-36570	2	PANEL TOP/BOTTOM RAIL	6063-T6	–
7	GW 31826	4	WEATHERSTRIP ADAPTER	6063-T6	END OF DOOR STILES (TOP/BOTTOM)
8	GW 37889A	2/HINGE ASSY.	TM OUTER BUTT HINGE	6063-T6	DOOR PANEL/FRAME HINGE SIDE
9	GW 33888	1/HINGE ASSY.	TM CENTER BUTT HINGE	6063-T6	DOOR PANEL/FRAME HINGE SIDE
10	GW 32222	2	DOOR LOCK INSERT	6063-T6	LOCK STILE
11	GW-34808	2/ LEAF	PRESSURE PLATE-TIE ROD	ALUMINUM	4" LONG
12	–	2/LEAF	TM FLUSH BOLT ASSEMBLY	ALUMINUM	DOOR LOCK STILES
13	GW-37056	AS REQD.	HEAD REINFORCING BAR, 12" LONG	6063-T6	AT MID SPAN
14	GW37056	AS REQD.	SILL REINFORCING BAR, 12" LONG	6063-T6	AT MID SPAN
15	TM-037	AS REQD.	FRAME JAMB ADAPTER	6063-T6	–
16	4037	AS REQ'D.	"ULTRAFAB" CENTERFIN WOOLPILE	WOOL	LOCK STILES, JAMBS, HEAD, SILL
17	GW 27646	2/LEAF	FLUSHBOLT GUIDE	6063-T6	LOCK STILES ENDS (TOP/BOTTOM)
18	–	1/HINGE	7/32"ø HINGE PIN	STEEL	AT EACH HINGE ASSEMBLY
20	–	AS REQD.	#10 x 1/2" F.H. UNDERCUT SMS.	STEEL	AT FLUSH BOLTS
21	–	2/LEAF	1/2"ø THREADED ROD, WASHER & NUT	STEEL	TOP/BOTTOM END RAILS
22	SERIES 400	1	KWIKSET KNOBLOCK AT REINF. 'N', 'A'&'B'	–	ACTIVE LEAF, 39-1/2" FROM BOTTOM
22A	SER 730	1	TITAN 730X26 DCP LOCKSET AT REINF. 'C'	–	ACTIVE LEAF, 39-1/2" FROM BOTTOM
23	SERIES 630	1	KWIKSET DEADBOLT AT REINF. 'N', 'A'&'B'	–	ACTIVE LEAF, 47-3/4" FROM BOTTOM
23A	SER 780	1	TITAN 780AX26 DCP DEAD BOLT AT REINF. 'C'	–	ACTIVE LEAF, 47-3/4" FROM BOTTOM
24	–	2/HINGE ASSY.	HINGE BUSHING	PLASTIC	HINGE ASSEMBLY
25	–	36	DUST PLUG (OPTIONAL)	PLASTIC	DOOR JAMB INSTALL. SCREW HOLES
26	–	AS REQD.	#10 x 1" P.H. SMS. (ASSY. SCREW)	STEEL	DOOR FRAME MEMBERS/MULL CLIPS
27	–	2/HINGE ASSY.	HINGE CAP	PLASTIC	HINGE ASSEMBLY
29	GW-37319	1	HI-RISE SILL	6063-T6	–
35	TM-044	4	SIDELITE GLAZING BEAD	6063-T6	SIDE LITE GLAZING PERIMETER
37	GW 36737	OPTIONAL	O.G. DECORATIVE MOULDING	6063-T6	DOOR PANEL PERIMETER

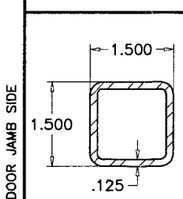

REINF. TUBE
STEEL

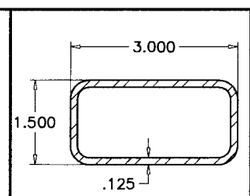

REINF. TUBE
STEEL

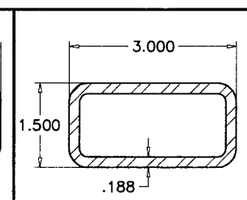

REINF. TUBE
STEEL

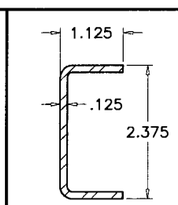

REINF. CHANNEL
STEEL

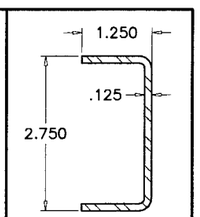

REINF. CHANNEL
STEEL

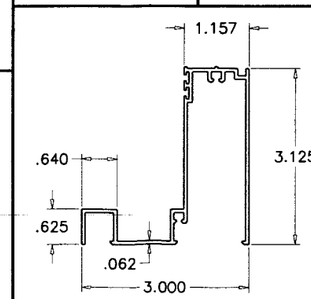

HI RISE SILL
GW-37319

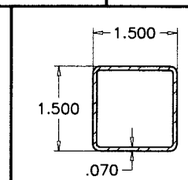

REINF. TUBE
STEEL

Engr: DR. HUMAYOUN FAROOQ
STRUCTURES
FLA. PE # 16557
C.A.N. 3938

JAN 0 9 2007

PRODUCT REVISED
In compliance with the Florida Building Code
Application No. 06-1016.02
Expiration Date June 29, 2008
By Ishwar L. Chawla
Miami Dade Product Control Division

AL-FAROOQ CORPORATION
ENGINEERS & PRODUCT DEVELOPMENT
1235 S.W. 87 AVE
MIAMI, FLORIDA 33174
TEL. (305) 264-8100 FAX. (305) 262-6978

COMP-ANL\W03-38TMW

SERIES-230 ALUM OUT-SWING DOOR W/ SIDELITES (N.I.)

TM WINDOW AND DOOR
601 N.W. 12TH AVE.
POMPANO BEACH, FL. 33069
TEL. (954) 781-4430 FAX. (954) 781-5078

revisions:

no	date	by	description
A	07.27.06		NO CHANGE THIS SHEET
B	01.04.07		REV. PER BCCO COMMENTS

date: 06-07-03
scale: 3/8" = 1"
dr. by: HAMID
chk. by:

drawing no.
W03-38

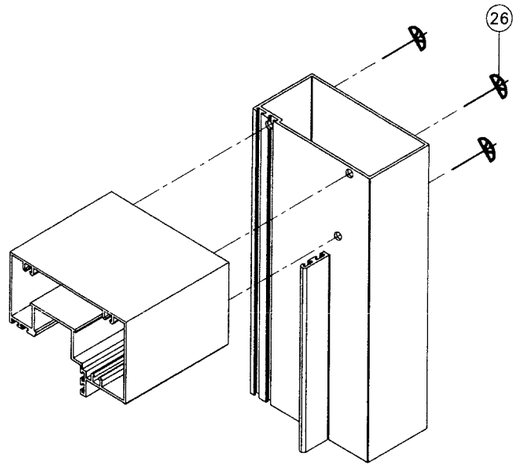

FRAME TOP CORNER
SIDELITE CORNER

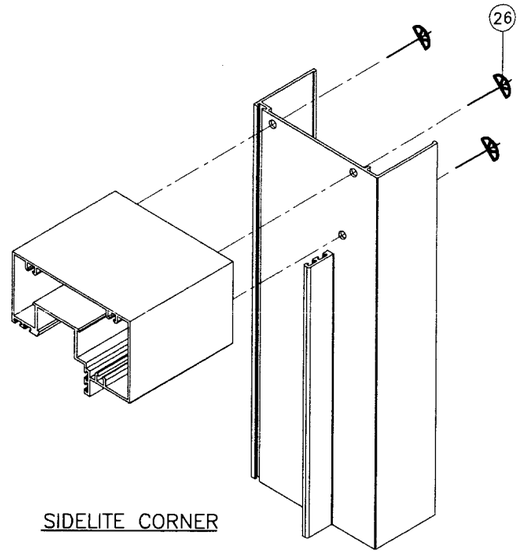

SIDELITE CORNER

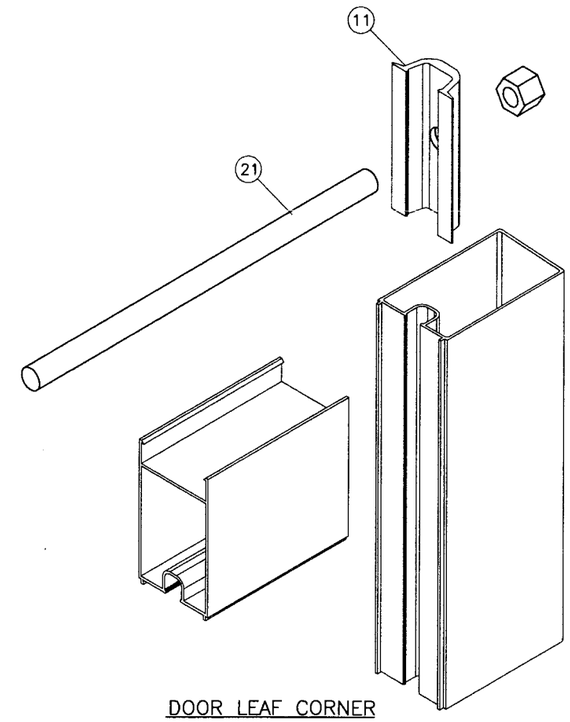

DOOR LEAF CORNER

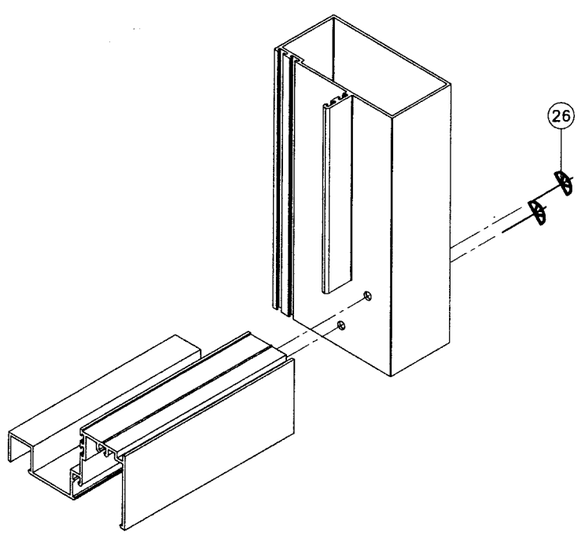

FRAME BOTTOM CORNER

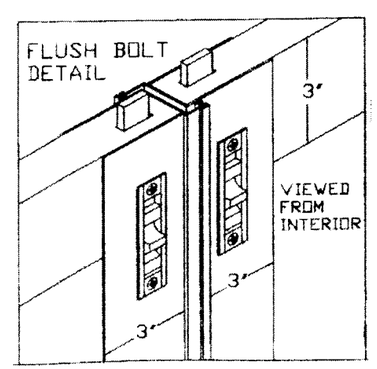

PRODUCT REVISED
in complying with the Florida
Building Code
Anticipated No. 06-1016.02
Expiration Date JUNE 29, 2008
By [illegible]
Miami Dade Product Control
Division

Engr: DR. HUMAYOUN FAROOQ
STRUCTURES
FLA. PE # 16557
C.A.N. 3538

JAN 0 9 2007

AL-FAROOQ CORPORATION
ENGINEERS & PRODUCT DEVELOPMENT
1235 S.W. 87 AVE
MIAMI, FLORIDA 33174
TEL. (305) 264-8100 FAX. (305) 262-6978
COMP-ANL\W03-38TMW

SERIES-230 ALUM OUT-SWING DOOR W/ SIDELITES (N.I.)

TM WINDOW AND DOOR
601 N.W. 12TH AVE.
POMPANO BEACH, FL. 33069
TEL. (954) 781-4430 FAX. (954) 781-5078

revisions:

no	date	by	description
A	07.27.06		NO CHANGE THIS SHEET
B	01.04.07		REV. PER BCCO COMMENTS

date: 06-07-03
scale: 3/8" = 1"
dr. by: HAMID
chk. by:

drawing no.
W03-38

sheet 10 of 10