MIAMI-DADE COUNTY

BUILDING CODE COMPLIANCE OFFICE (BCCO)
PRODUCT CONTROL DIVISION

MIAMI-DADE COUNTY, FLORIDA
METRO-DADE FLAGLER BUILDING
140 WEST FLAGLER STREET, SUITE 1603
MIAMI, FLORIDA 33130-1563
(305) 375-2901 FAX (305) 375-2908
www.buildingcodeonline.com

NOTICE OF ACCEPTANCE (NOA)

YKK AP America, Inc.
332 Firetower Road
Dublin, GA 31021

SCOPE:

This NOA is being issued under the applicable rules and regulations governing the use of construction materials. The documentation submitted has been reviewed by Miami-Dade County Product Control Division and accepted by the Board of Rules and Appeals (BORA) to be used in Miami Dade County and other areas where allowed by the Authority Having Jurisdiction (AHJ).

This NOA shall not be valid after the expiration date stated below. The Miami-Dade County Product Control Division (In Miami Dade County) and/or the AHJ (in areas other than Miami Dade County) reserve the right to have this product or material tested for quality assurance purposes. If this product or material fails to perform in the accepted manner, the manufacturer will incur the expense of such testing and the AHJ may immediately revoke, modify, or suspend the use of such product or material within their jurisdiction. BORA reserves the right to revoke this acceptance, if it is determined by Miami-Dade County Product Control Division that this product or material fails to meet the requirements of the applicable building code.

This product is approved as described herein, and has been designed to comply with the Florida Building Code, including the High Velocity Hurricane Zone.

DESCRIPTION: Series YOW 225H Non-Thermal Aluminum Casement Window – L.M.I.

APPROVAL DOCUMENT: Drawing No.**W06-58**, titled "YOW 225H Non Thermal Alum. Casement Wdw. (L.M.I.)", sheets 1 through 6 of 6, dated 09/23/06, prepared by Al-Farooq Corporation, signed and sealed by Humayoun Farooq, P.E., bearing the Miami-Dade County Product Control Approval stamp with the Notice of Acceptance number and approval date by the Miami-Dade County Product Control Division.

MISSILE IMPACT RATING: Large and Small Missile Impact Resistant

LABELING: Each unit shall bear a permanent label with the manufacturer's name or logo, city, state and following statement: "Miami-Dade County Product Control Approved", unless otherwise noted herein.

RENEWAL of this NOA shall be considered after a renewal application has been filed and there has been no change in the applicable building code negatively affecting the performance of this product.

TERMINATION of this NOA will occur after the expiration date or if there has been a revision or change in the materials, use, and/or manufacture of the product or process. Misuse of this NOA as an endorsement of any product, for sales, advertising or any other purposes shall automatically terminate this NOA. Failure to comply with any section of this NOA shall be cause for termination and removal of NOA.

ADVERTISEMENT: The NOA number preceded by the words Miami-Dade County, Florida, and followed by the expiration date may be displayed in advertising literature. If any portion of the NOA is displayed, then it shall be done in its entirety.

INSPECTION: A copy of this entire NOA shall be provided to the user by the manufacturer or its distributors and shall be available for inspection at the job site at the request of the Building Official.
This NOA consists of this page 1 and evidence pages E-1 and E-2, as well as approval document mentioned above.
The submitted documentation was reviewed by **Manuel Perez, P.E.**

PRODUCT CONTROL ACCEPTED

YKK AP America, Inc.

NOTICE OF ACCEPTANCE: EVIDENCE SUBMITTED

A. DRAWINGS

1. Manufacturer's die drawings and sections.
2. Drawing No **W06-58**, Sheets 1 through 6 of 6, titled "YOW 225H Non Thermal Alum. Casement Wdw. (L.M.I.)", dated 09/23/06, prepared by Al-Farooq Corporation, signed and sealed by Humayoun Farooq, P.E.

B. TESTS

1. Test reports on 1) Air Infiltration Test, per FBC, TAS 202-94
   2) Uniform Static Air Pressure Test, Loading per FBC TAS 202-94
   3) Water Resistance Test, per FBC, TAS 202-94
   4) Large Missile Impact Test per FBC, TAS 201-94
   5) Small Missile Impact Test per FBC, TAS 201-94
   6) Cyclic Wind Pressure Loading per FBC, TAS 203-94
   7) Forced Entry Test, per FBC 2411 3.2.1, TAS 202-94

   along with marked-up drawings and installation diagram of an aluminum outswing casement window, prepared by Hurricane Test Laboratory, LLC, Test Report No. **HTL-0231-1019-05**, Elev. A & B dated 10/28/05, Elev. C dated 11/03/05-11/09/05 and Elev. D dated 11/04/05-01/18/06, signed and sealed by Vinu J. Abraham, P. E.
2. Test reports on 1) Air Infiltration Test, per FBC, TAS 202-94
   2) Uniform Static Air Pressure Test, Loading per FBC TAS 202-94
   3) Water Resistance Test, per FBC, TAS 202-94
   4) Large Missile Impact Test per FBC, TAS 201-94
   5) Cyclic Wind Pressure Loading per FBC, TAS 203-94
   6) Forced Entry Test, per FBC 2411 3.2.1, TAS 202-94

   along with marked-up drawings and installation diagram of an aluminum project-out window, prepared by Hurricane Test Laboratory, LLC, Test Report No. **HTL-0231-1019-05**, Elev. E dated 10/28/05-11/04/05 and Elev. O dated 11/08/05-01/18/06, signed and sealed by Vinu J. Abraham, P. E.
3. Test reports on 1) Air Infiltration Test, per FBC, TAS 202-94
   2) Uniform Static Air Pressure Test, Loading per FBC TAS 202-94
   3) Water Resistance Test, per FBC, TAS 202-94
   4) Large Missile Impact Test per FBC, TAS 201-94
   5) Small Missile Impact Test per FBC, TAS 201-94
   6) Cyclic Wind Pressure Loading per FBC, TAS 203-94

   along with marked-up drawings and installation diagram of aluminum fixed window, prepared by Hurricane Test Laboratory, LLC, Test Report No. **HTL-0231-1019-05**, Elev. F dated 10/28/05-01/23/06, Elev. G dated 10/28/05-01/24/06, Elev. H dated 11/07/05, Elev. I dated 01/23/06-01/26/06, Elev. J dated 10/28/05-01/25/06, Elev. J1 dated 11/07/05-01/24/06, Elev. K dated 11/01/05, Elev. L & M dated 10/31/05-01/20/06, and Elev. N dated 11/07/05-01/18/06, signed and sealed by Vinu J. Abraham, P. E.

Manuel Perez, P.E.
Product Control Examiner
NOA No. 06-1016.05
Expiration Date: December 14, 2011
Approval Date: December 14, 2006

4. Test reports on 1) Uniform Static Air Pressure Test, Loading per FBC TAS 202-94
   2) Large Missile Impact Test per FBC, TAS 201-94
   3) Cyclic Wind Pressure Loading per FBC, TAS 203-94

   along with marked-up drawings and installation diagram of an aluminum fixed window, prepared by Hurricane Test Laboratory, LLC, Test Report No. **HTL-0231-0316-06**, Elev. H dated 03/27/06-03/28/06, signed & sealed by Vinu J. Abraham, P. E.

C. **CALCULATIONS**

1. Anchor Calculations and structural analysis, complying with FBC-2004, prepared by Al-Farooq Corporation, dated 09/13/06, signed and sealed by Humayoun Farooq, P.E. **Complies with ASTM E1300-02**

D. **QUALITY ASSURANCE**

1. Miami Dade Building Code Compliance Office (BCCO).

E. **MATERIAL CERTIFICATIONS**

1. Notice of Acceptance No. **03-0415.13** issued to Solutia Inc. for their "**Vanceva Composites used for lamination of glass**" dated 12/11/03, expiring on 12/11/08.
2. Notice of Acceptance No. **04-0816.02** issued to E.I. DuPont DeNemours for "**DuPont Butacite "ST" PVB Material**" dated 02/04/05, expiring on 02/04/10.
3. Notice of Acceptance No. **01-0205.02** issued to Solutia Inc. for their "**Saflex / Keepsafe Maximum**" dated 05/17/01, expiring on 05/21/06.

F. **STATEMENTS**

1. Statement letter of conformance, dated September 13, 2006, signed and sealed by Humayoun Farooq, P.E.
2. Statement letter of no financial interest, dated September 13, 2006, signed and sealed by Humayoun Farooq, P.E.
3. Laboratory compliance letter for Test Reports No. HTL-0231-1019-05 and HTL-0231-0316-06, issued by Hurricane Test Laboratory, LLC, dated April 18, 2006, signed and sealed by Vinu J. Abraham, P.E.

G. **OTHER**

1. None.

Manuel Perez, P.E.
Product Control Examiner
NOA No. 06-1016.05
Expiration Date: December 14, 2011
Approval Date: December 14, 2006

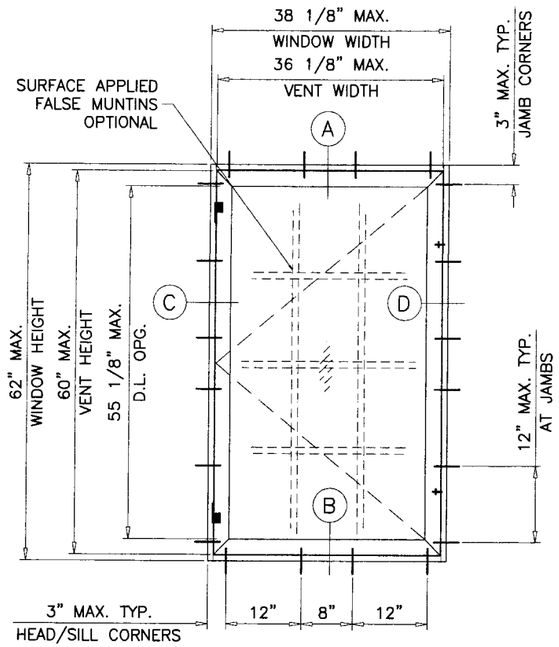

SINGLE VENT WDW.

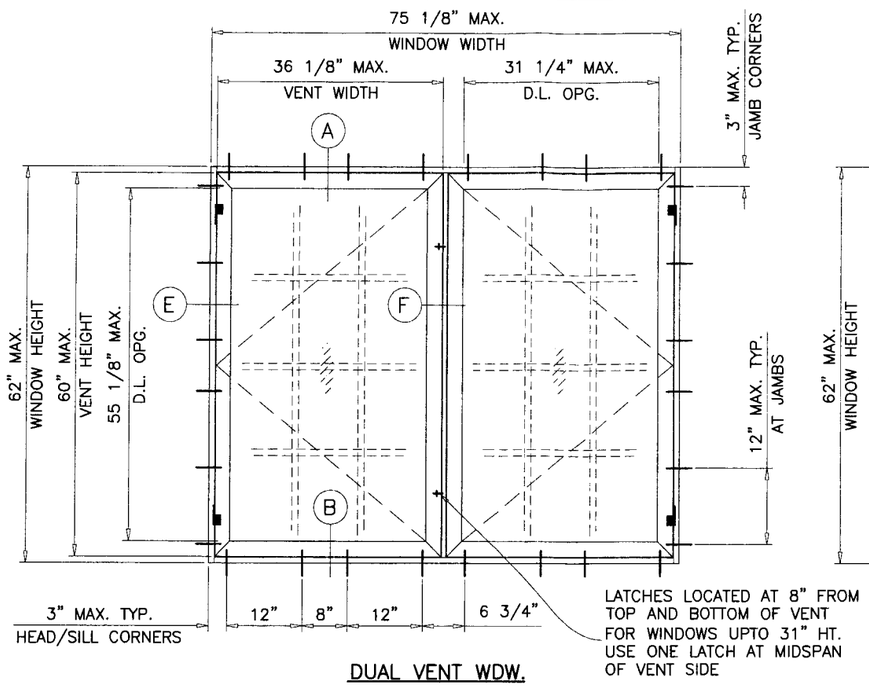

DUAL VENT WDW.

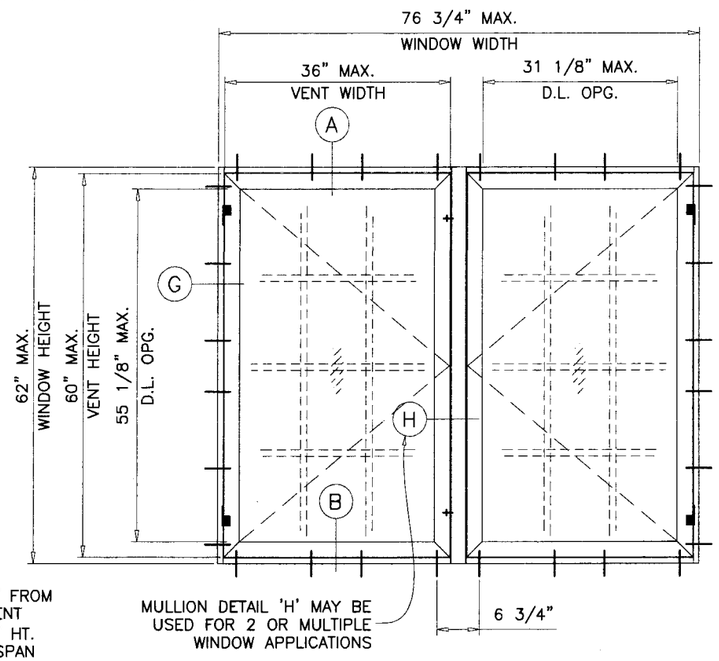

SIDE BY SIDE WDWS.

YOW 225H
NON THERMAL ALUMINUM CASEMENT WINDOWS

APPROVAL APPLIES TO SINGLE VENT WINDOWS OR DUAL VENT WINDOWS USING INTEGRAL IMPOST.

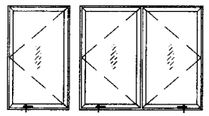

ALSO TOP AND BOTTOM COMBINATIONS OF FIXED AND CASEMENT WINDOWS USING INTEGRAL IMPOST.

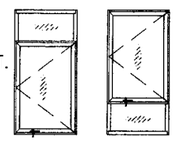

ALSO TO SIDE BY SIDE COMBINATIONS OF CASEMENT/FIXED, CASEMENT/CASEMENT OR WITH OTHER WINDOW TYPES IN MODULES OF TWO OR MORE WINDOWS USING MIAMI-DADE COUNTY APPROVED MULLIONS IN BETWEEN.

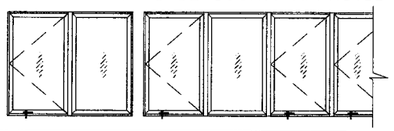

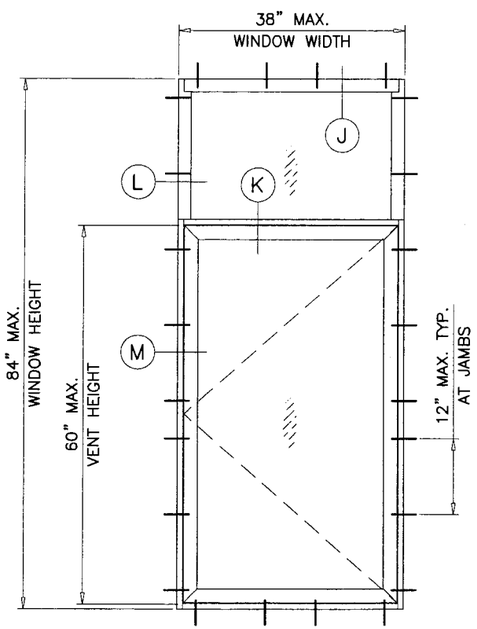

FIXED/CASEMENT WDWS.

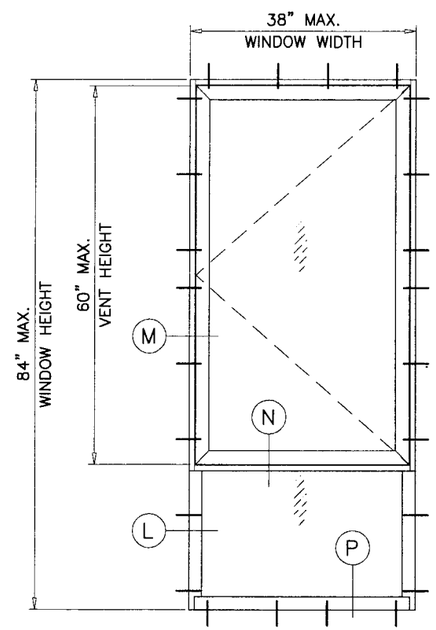

CASEMENT/FIXED WDWS.

THIS PRODUCT HAS BEEN DESIGNED AND TESTED TO COMPLY WITH THE REQUIREMENTS OF THE FLORIDA BUILDING CODE 2004 EDITION (REV. 2005) INCLUDING HIGH VELOCITY HURRICANE ZONE (HVHZ).

WOOD BUCKS BY OTHERS, MUST BE ANCHORED PROPERLY TO TRANSFER LOADS TO THE STRUCTURE.

ANCHORS SHALL BE AS LISTED, SPACED AS SHOWN ON DETAILS, ANCHORS EMBEDMENT TO BASE MATERIAL SHALL BE BEYOND WALL DRESSING OR STUCCO.

ANCHORING OR LOADING CONDITIONS NOT SHOWN IN THESE DETAILS ARE NOT PART OF THIS APPROVAL.

A LOAD DURATION INCREASE IN ALLOWABLE STRESS IS USED IN DESIGN OF ANCHORS INTO WOOD ONLY.

MATERIALS INCLUDING BUT NOT LIMITED TO STEEL/METAL SCREWS, THAT COME INTO CONTACT WITH OTHER DISSIMILAR MATERIALS SHALL MEET THE REQUIREMENTS OF 2004 FLORIDA BLDG. CODE SECTION 2003.8.4 (SUPPLEMENT 2005).

THESE WINDOWS ARE RATED FOR LARGE MISSILE IMPACT. SHUTTERS ARE NOT REQUIRED.

MAXIMUM DESIGN LOAD RATING = + 65.0 PSF
(FOR SIZES SHOWN OR SMALLER) − 65.0 PSF

LAMINATED GLASS
LARGE MISSILE IMPACT

Engr: DR. HUMAYOUN FAROOQ
STRUCTURES
FLA. PE # 16557
C.A.N. 3538

NOV 2 1 2006

Approved as complying with the Florida Building Code
Date DEC. 14 2006
NOA# 06-1016.05
Miami Dade Product Control Division
By Manuel Perez

AL-FAROOQ CORPORATION
ENGINEERS, PLANNERS & PRODUCT DESIGN
1235 SW 87 AVE
MIAMI, FLORIDA 33174
TEL. (305) 264-8100 FAX. (305) 262-6978
COMP-ANL\W06-58YKK

YOW 225H NON THERMAL ALUM CASEMENT WDW. (L.M.I.)

YKK ap™
YKK AP AMERICA INC.
332 FIRETOWER ROAD
DUBLIN, GEORGIA 31021
TEL.(478) 277-1955 FAX(478) 277-1978

revisions:

no	date	by	description

date: 09-23-06
scale: 1/2"=1'-0"
dr. by: HAMID
chk. by:

drawing no.
W06-58

SEALANTS:

FRAME CORNERS JOINTS SEALED WITH BUTYL RUBBER CORNER GASKET (#E2-0644).
TREMCO SPECTRUM 2 SILICONE SEALANT AT PERIMETER.

WEEP HOLES:

W1 = 1/4" X 1-1/16" WEEP SLOT AT CENTERLINE.
W2 = 9/32" DIA. WEEP HOLES AT 4" FROM EACH CORNER

LOCK OPTIONS:

OPTION #1:

BRONZECRAFT CAM HANDLES (E1-1541/1542)
AT LOCK STILE OF VENT, 8" FROM EACH END
SECURED WITH (2) #10 X 1/2" FH SMS.

BRONZECRAFT KEEPERS (E1-1519)
AT FRAME JAMB FACING LOCKS
SECURED WITH (2) #10 X 1/2" FH SMS.
SEE DTL. 'F' ON SHEET 4

OPTION #2:

PULL HANDLE (E1-1508) AT LOCK STILE
SECURED WITH (2) #8 X 1/2" FH SMS.

MULTI-POINT LOCK ASSEMBLY
(E1-1505, E1-1704, E1-1717, E1-1701, E1-1703)
AT FRAME JAMB, ENGAGEMENT POINTS 8" FROM ENDS

BRONZECRAFT KEEPERS (E1-1519)
AT VENT LOCK STILE FACING LOCKS
SECURED WITH (2) #10 X 1/2" FH SMS.
SEE DTL. 'G' ON SHEET 4

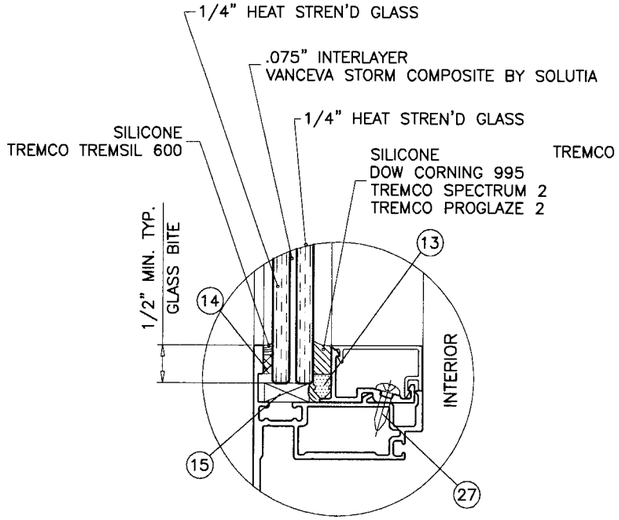

GLASS TYPE 'A'

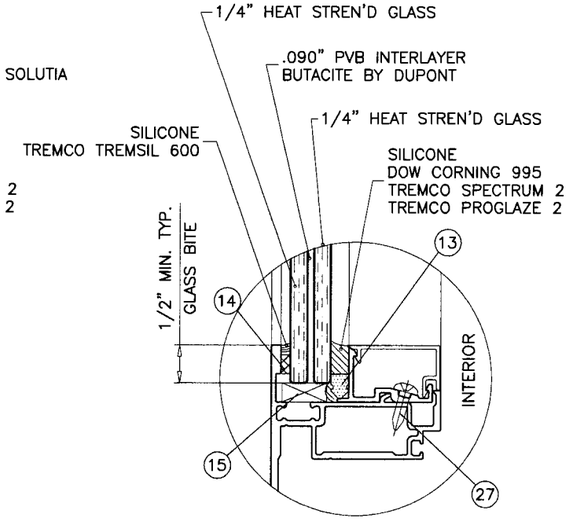

GLASS TYPE 'B'

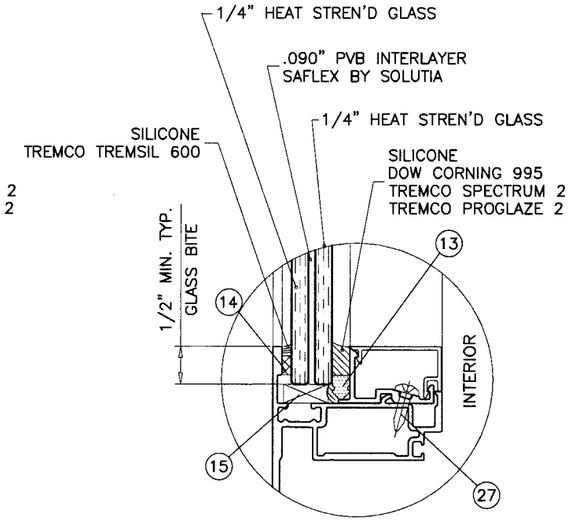

GLASS TYPE 'C'

GLAZING OPTIONS

NOTE:
GLASS CAPACITIES ARE BASED ON ASTM E1300-02 (3 SEC. GUSTS)

Engr: DR. HUMAYOUN FAROOQ
STRUCTURES
FLA. PE # 16557
C.A.N. 3538

NOV 21 2006

Approved as complying with the Florida Building Code
Date DEC. 14, 2006
NOAC 06-1016.05
Miami-Dade Product Control
By Manuel Perez

AL-FAROOQ CORPORATION
ENGINEERS, PLANNERS & PRODUCT DESIGN
1235 SW 87 AVE
MIAMI, FLORIDA 33174
TEL. (305) 264-8100 FAX. (305) 262-6978
COMP-ANL\W06-58YKK

YOW 225H NON THERMAL ALUM CASEMENT WDW. (L.M.I.)

YKK AP AMERICA INC.
332 FIRETOWER ROAD
DUBLIN, GEORGIA 31021
TEL.(478) 277-1955 FAX(478) 277-1978

revisions:			
no	date	by	description

date: 09-23-06
scale: 1/2" = 1"
dr. by: HAMID
chk. by:

drawing no. W06-58

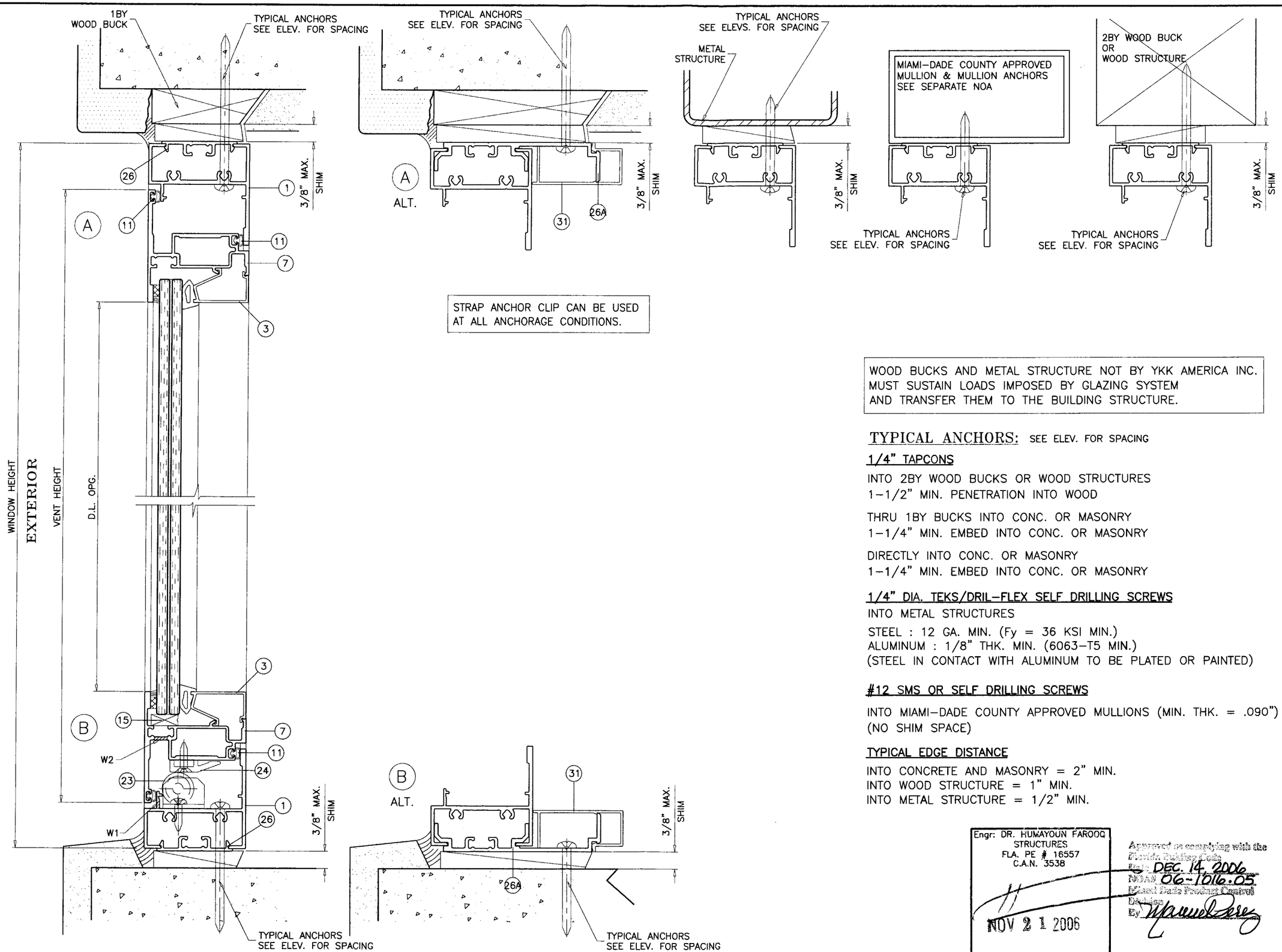

STRAP ANCHOR CLIP CAN BE USED
AT ALL ANCHORAGE CONDITIONS.

WOOD BUCKS AND METAL STRUCTURE NOT BY YKK AMERICA INC.
MUST SUSTAIN LOADS IMPOSED BY GLAZING SYSTEM
AND TRANSFER THEM TO THE BUILDING STRUCTURE.

TYPICAL ANCHORS: SEE ELEV. FOR SPACING

1/4" TAPCONS

INTO 2BY WOOD BUCKS OR WOOD STRUCTURES
1-1/2" MIN. PENETRATION INTO WOOD

THRU 1BY BUCKS INTO CONC. OR MASONRY
1-1/4" MIN. EMBED INTO CONC. OR MASONRY

DIRECTLY INTO CONC. OR MASONRY
1-1/4" MIN. EMBED INTO CONC. OR MASONRY

1/4" DIA. TEKS/DRIL-FLEX SELF DRILLING SCREWS

INTO METAL STRUCTURES

STEEL : 12 GA. MIN. (Fy = 36 KSI MIN.)
ALUMINUM : 1/8" THK. MIN. (6063-T5 MIN.)
(STEEL IN CONTACT WITH ALUMINUM TO BE PLATED OR PAINTED)

#12 SMS OR SELF DRILLING SCREWS

INTO MIAMI-DADE COUNTY APPROVED MULLIONS (MIN. THK. = .090")
(NO SHIM SPACE)

TYPICAL EDGE DISTANCE

INTO CONCRETE AND MASONRY = 2" MIN.
INTO WOOD STRUCTURE = 1" MIN.
INTO METAL STRUCTURE = 1/2" MIN.

Engr: DR. HUMAYOUN FAROOQ
STRUCTURES
FLA. PE # 16557
C.A.N. 3538

NOV 2 1 2006

Approved as complying with the
Florida Building Code
Exp. DEC. 14, 2006
NOAA 06-1016.05
Miami-Dade Product Control
Division
By

AL-FAROOQ CORPORATION
ENGINEERS, PLANNERS & PRODUCT DESIGN
1235 SW 87 AVE
MIAMI, FLORIDA 33174
TEL. (305) 264-8100 FAX. (305) 262-6978
COMP-ANL\W06-59YKK

YOW 225H NON THERMAL ALUM CASEMENT WDW. (S.M.I.)

YKK AP AMERICA INC.
332 FIRETOWER ROAD
DUBLIN, GEORGIA 31021
TEL.(478) 277-1955 FAX(478) 277-1978

revisions:			
no	date	by	description

date: 09-23-06
scale: 1/2" = 1"
dr. by: HAMID
chk. by:

drawing no.
W06-59

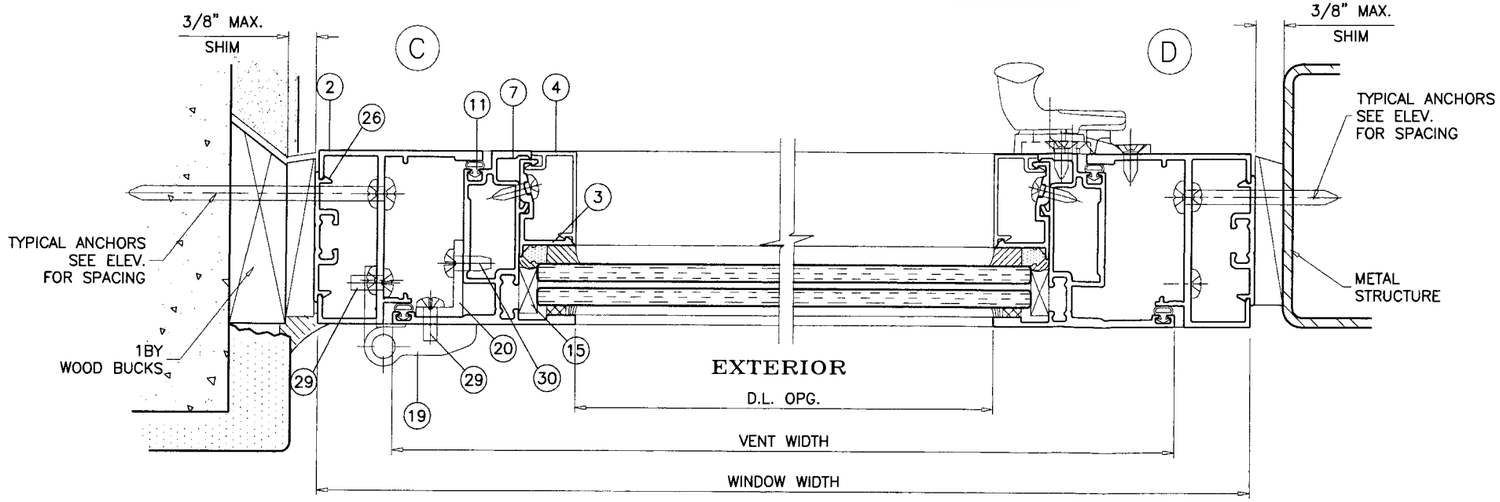

SINGLE VENT WINDOWS

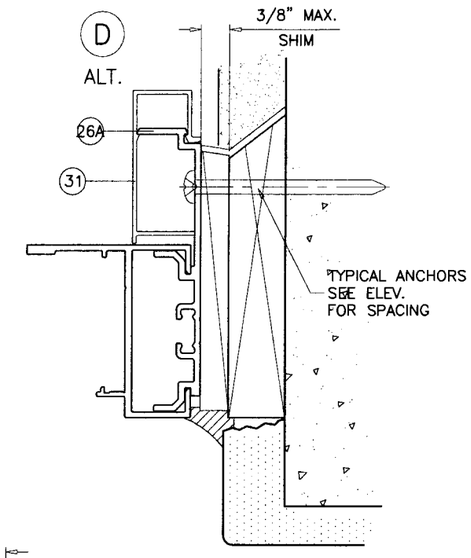

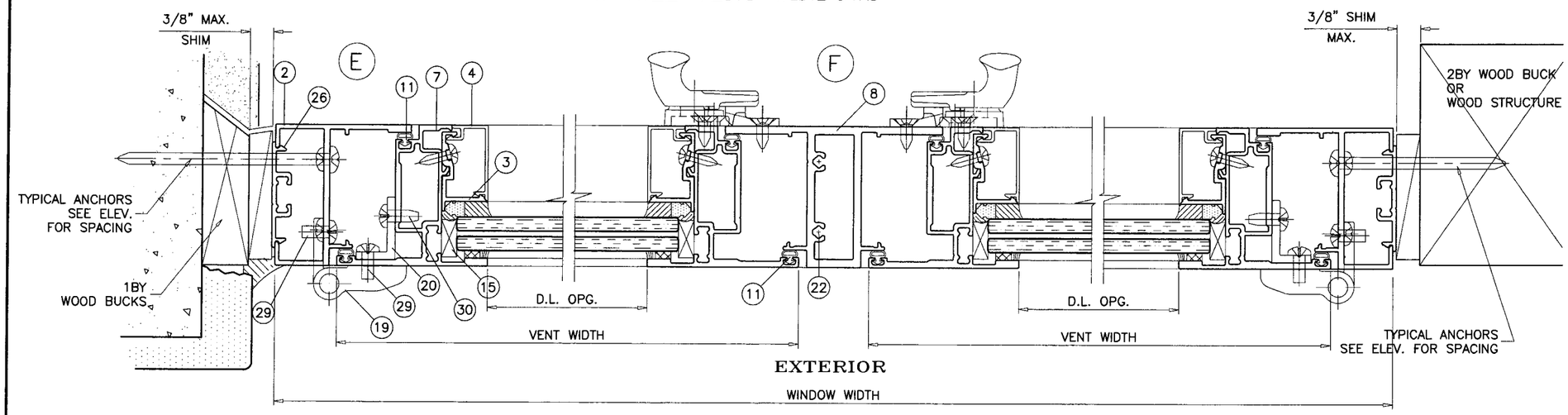

DUAL VENT WINDOWS

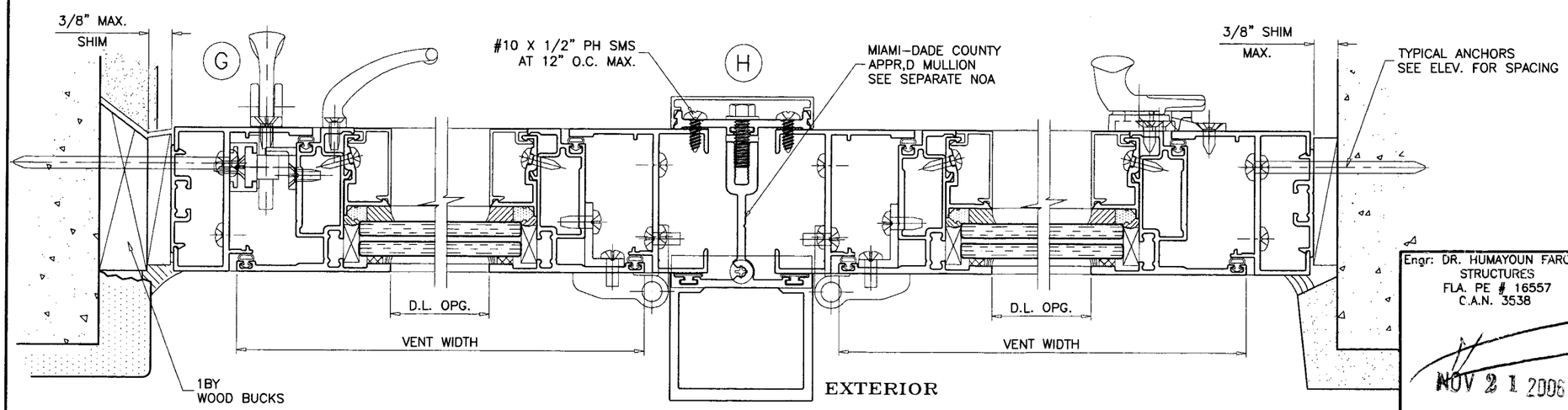

SIDE BY SIDE WINDOWS

Engr: DR. HUMAYOUN FAROOQ
STRUCTURES
FLA. PE # 16557
C.A.N. 3538

NOV 2 1 2006

Approved as complying with the
Florida Building Code
Date DEC. 14, 2006
Work 06-1016.05
Miami Dade Product Control
By

AL-FAROOQ CORPORATION
ENGINEERS, PLANNERS & PRODUCT DESIGN
1235 SW 87 AVE
MIAMI, FLORIDA 33174
TEL. (305) 264-8100 FAX. (305) 262-6978
COMP-ANL\W06-58YKK

YOW 225H NON THERMAL ALUM CASEMENT WDW. (L.M.I.)

YKK AP AMERICA INC.
332 FIRETOWER ROAD
DUBLIN, GEORGIA 31021
TEL.(478) 277-1955 FAX(478) 277-1978

revisions:			
no	date	by	description

date: 09-23-06
scale: 1/2" = 1"
dr. by: HAMID
chk. by:

drawing no.
W06-58

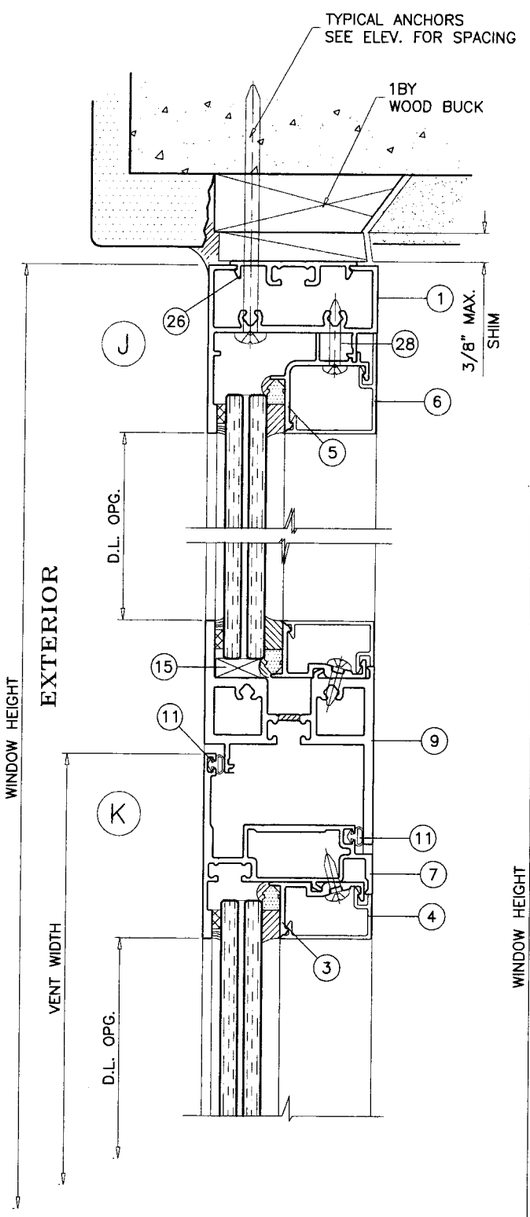

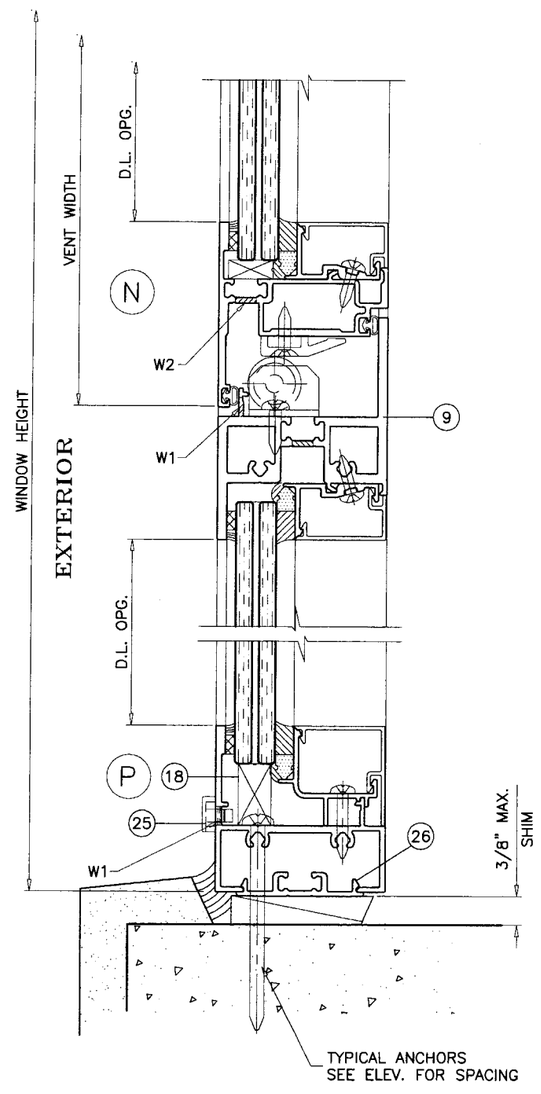

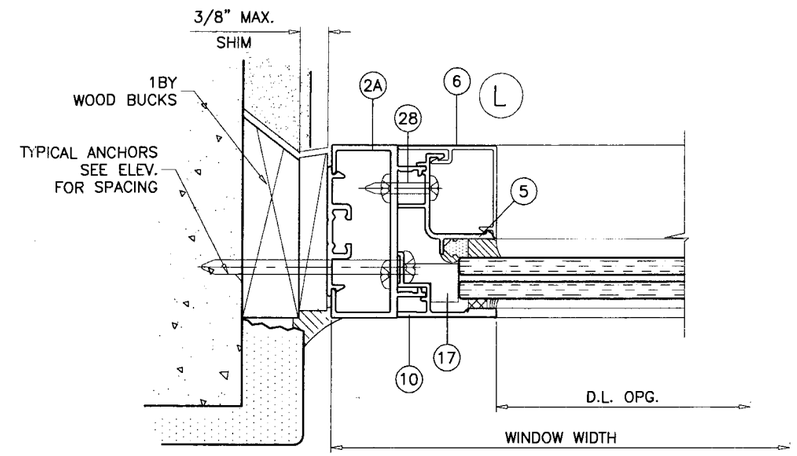

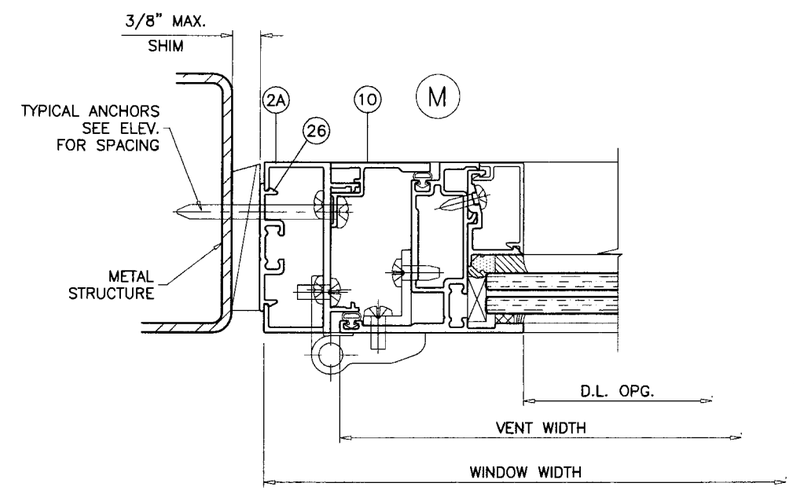

Engr: DR. HUMAYOUN FAROOQ
STRUCTURES
FLA. PE # 16557
C.A.N. 3538

NOV 2 1 2006

Approved as complying with the
Florida Building Code
Date DEC. 14, 2006
NOA# 06-1016.05
Miami-Dade Product Control
Division
By

YOW 225H NON THERMAL ALUM CASEMENT WDW. (L.M.I.)

YKK ap™

YKK AP AMERICA INC.
332 FIRETOWER ROAD
DUBLIN, GEORGIA 31021
TEL.(478) 277-1955 FAX(478) 277-1978

AL-FAROOQ CORPORATION
ENGINEERS, PLANNERS & PRODUCT DESIGN
1235 SW 87 AVE
MIAMI, FLORIDA 33174
TEL. (305) 264-8100 FAX. (305) 262-6978

COMP-ANL\W06-58YKK

revisions:

no	date	by	description

date: 09-23-06
scale: 1/2" = 1"
dr. by: HAMID
chk. by:

drawing no.
W06-58

sheet 5 of 6

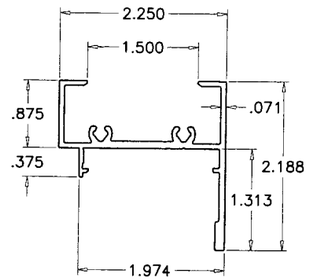

1 FRAME HEAD/SILL

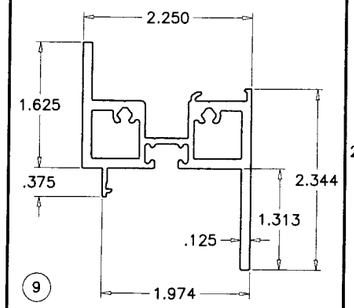

9 HORIZ. IMPOST (X/O OR O/X)

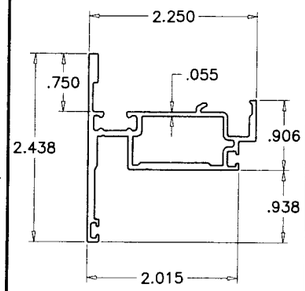

7 VENT STILE

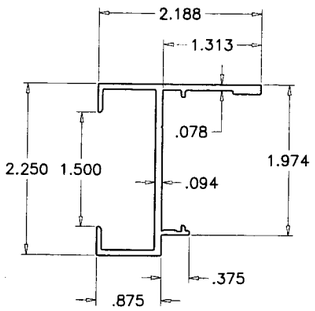

2 FRAME JAMB (VENT)

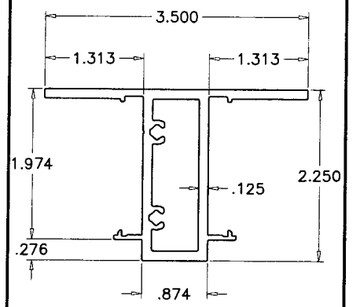

8 VERTICAL IMPOST

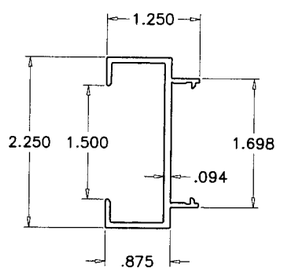

2A FRAME JAMB (FIX. LITE)

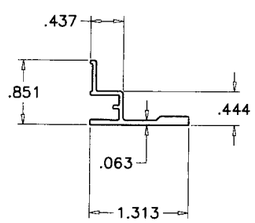

10 EXTERIOR GLAZING LEG

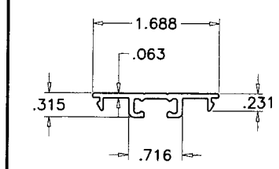

26 FILLER PLATE

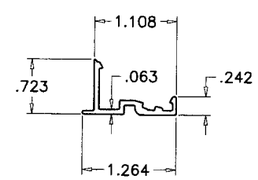

3 GLAZING STOP (VENT)

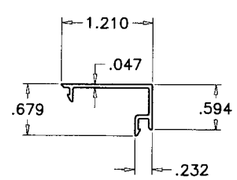

4 SNAP COVER (VENT)

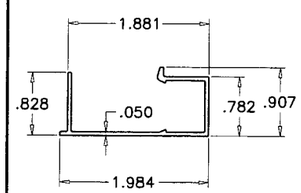

31 STRAP ANCHOR COVER

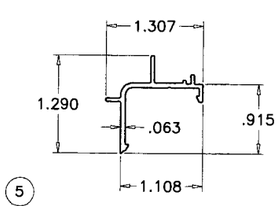

5 GLAZING STOP (FIX. HEAD/SILL)

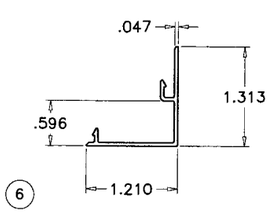

6 SNAP COVER (FIX. HEAD/SILL)

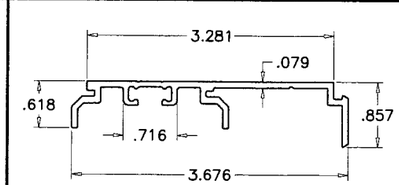

26A STRAP ANCHOR CLIP

ITEM NO.	PART NUMBER	QUANTITY	DESCRIPTION	MATERIAL	MANF./SUPLIER/REMARKS
1	E9-4536	2/ WDW	FRAME HEAD/SILL	6063-T5	YKK AMERICA INC.
2	E9-4537	2/ WDW	FRAME JAMB (VENT)	6063-T5	YKK AMERICA INC.
2A	E9-4538	AS REQD.	FRAME JAMB (FIX. LITE)	6063-T5	YKK AMERICA INC.
3	E9-4546	4/ WDW	GLAZING STOP (VENT)	6063-T5	YKK AMERICA INC.
4	E9-4547	4/ WDW	GLAZING STOP COVER (VENT)	6063-T5	YKK AMERICA INC.
5	E9-4544	4/ WDW	GLAZING STOP (FIX. LITE)	6063-T5	YKK AMERICA INC.
6	E9-4545	4/ WDW	GLAZING STOP COVER (FIX. LITE)	6063-T5	YKK AMERICA INC.
7	E9-4504	4/ WDW	VENT STILE	6063-T5	YKK AMERICA INC.
8	E9-4539	AS REQD.	VERT. IMPOST (XX)	6063-T5	YKK AMERICA INC.
9	E9-4570	AS REQD.	HORIZ. IMPOST (X/O OR O/X)	6063-T5	YKK AMERICA INC.
10	E9-4513	AS REQD.	EXTERIOR GLAZING LEG	6063-T5	YKK AMERICA INC.
11	E2-0625	AS REQD.	BULB WEATHERSTRIPPING	PVC	YKK AMERICA INC.
12	E2-0051	AS REQD.	BULB W'STRIPPING AT MULLION	PVC	YKK AMERICA INC.
13	E2-0359	AS REQD.	ARROW SPACER, 1" LONG	EPDM SPONGE	AT 3" FROM ENDS & 10" O.C. MAX.
14	E2-0670	AS REQD.	BACKER TAPE FOR 1/8" F.C.	POLYURETHANE	–
15	E2-0737	AS REQD.	SETTING BLOCKS/SIDE BLOCKS (VENT)	EPDM	1/4" X 19/32" X 4" LONG
17	E2-0653	AS REQD.	SIDE BLOCKS (FIX. LITE)	EPDM	–
18	E2-0652	AS REQD.	SETTING BLOCKS (FIX. LITE)	EPDM	1/2" X 7/8" X 4" LONG
19	E1-1714/1715	2/ VENT	BUTT HINGES AT 7-1/2" FROM EACH END	6063-T5	–
20	E1-1723	1/ HINGE	HINGE ANGLE	6063-T5	–
21	E1-1712	1/ CORNER	CORNER BLOCK	6063-T5	YKK AMERICA INC.
22	#10 X 1"	2/ CORNER	FRAME ASSEMBLY SCREWS	STEEL	PH SMS
23	K-10639	1/ VENT	GUIDE ROLLER ASSEMBLY	–	SECURED TO SILL W/ (2) #8 X 1/2" PH SMS
24	E1-1713	1/ VENT	GUIDE ROLLER BASE	–	SECURED TO VENT W/ (2) #10 3/4" FH SMS
25	E3-1127	1/ WDW	WEEP COVER	NYLON	AT WEEP SLOTS (AT FIXED ONLY)
26	E9-4566	AS REQD.	FILLER PLATE, 3" LONG AT ANCHOR LOCATIONS	6063-T5	YKK AMERICA INC.
26A	E1-1779	AS REQD.	STRAP ANCHOR, 4-1/2" LONG @ ANCHOR LOCATIONS	6063-T5	YKK AMERICA INC.
27	#8 X 1/2"	–	GLAZING STOP SCREWS	–	PH SMS AT 3" FROM ENDS & 10" O.C.
28	#10 X 1"	–	GLAZING STOP SCREWS	–	PH SMS AT 3" FROM ENDS & 10" O.C.
29	#10 X 7/16"	3/ HASP	HINGE INSTALLATION SCREWS	–	PH MS
30	#10 X 1/2"	3/ ANGLE	HINGE ANGLE SCREWS	–	PH SMS
31	E9-8431	AS REQD.	STRAP ANCHOR COVER	6063-T5	YKK AMERICA INC.

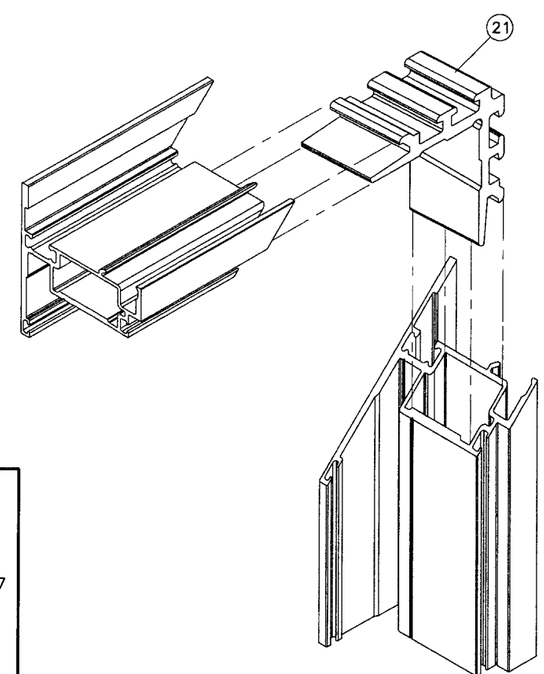

VENT CORNER

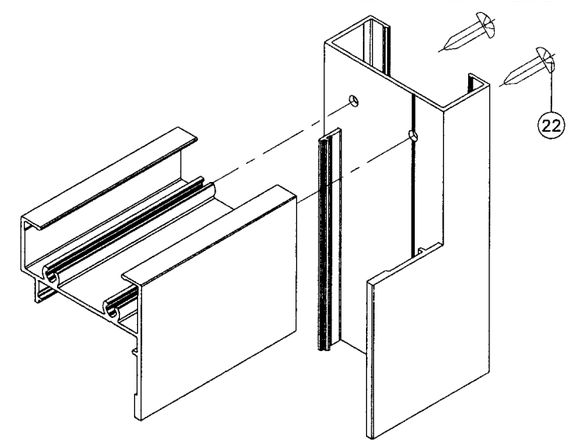

FRAME CORNER

Engr: DR. HUMAYOUN FAROOQ
STRUCTURES
FLA. PE # 16557
C.A.N. 3538

NOV 21 2006

Approved as complying with the Florida Building Code
Date DEC. 14, 2006
NOAC 06-1016.05
Miami Dade Product Control Division
By Manuel Perez

AL-FAROOQ CORPORATION
ENGINEERS, PLANNERS & PRODUCT DESIGN
1235 SW 87 AVE
MIAMI, FLORIDA 33174
TEL. (305) 264-8100 FAX. (305) 262-6978
COMP-ANL\W06-58YKK

YKK AP AMERICA INC.
332 FIRETOWER ROAD
DUBLIN, GEORGIA 31021
TEL.(478) 277-1955 FAX(478) 277-1978

YOW 225H NON THERMAL ALUM CASEMENT WDW. (L.M.I.)

revisions:

no	date	by	description

date: 09-23-06
scale: 1/2" = 1"
dr. by: HAMID
chk. by:

drawing no. W06-58