MIAMI-DADE COUNTY

BUILDING CODE COMPLIANCE OFFICE (BCCO)
PRODUCT CONTROL DIVISION

MIAMI-DADE COUNTY, FLORIDA
METRO-DADE FLAGLER BUILDING
140 WEST FLAGLER STREET, SUITE 1603
MIAMI, FLORIDA 33130-1563
(305) 375-2901 FAX (305) 375-2908
www.miamidade.gov/buildingcode

NOTICE OF ACCEPTANCE (NOA)

Jeld-Wen, Inc. (OR)
3737 Lakeport Blvd.
Klamath Falls, OR 97601

SCOPE:

This NOA is being issued under the applicable rules and regulations governing the use of construction materials. The documentation submitted has been reviewed by Miami-Dade County Product Control Division and accepted by the Board of Rules and Appeals (BORA) to be used in Miami Dade County and other areas where allowed by the Authority Having Jurisdiction (AHJ).

This NOA shall not be valid after the expiration date stated below. The Miami-Dade County Product Control Division (In Miami Dade County) and/or the AHJ (in areas other than Miami Dade County) reserve the right to have this product or material tested for quality assurance purposes. If this product or material fails to perform in the accepted manner, the manufacturer will incur the expense of such testing and the AHJ may immediately revoke, modify, or suspend the use of such product or material within their jurisdiction. BORA reserves the right to revoke this acceptance, if it is determined by Miami-Dade County Product Control Division that this product or material fails to meet the requirements of the applicable building code.

This product is approved as described herein, and has been designed to comply with the Florida Building Code, including the High Velocity Hurricane Zone.

DESCRIPTION: Series "PW 8300 Premium Atlantic" PVC Fixed Window – L.M.I.

APPROVAL DOCUMENT: Drawing No. **JELD0034**, titled "Premium Atlantic Vinyl PW (8300)" sheets 1 through 5 of 5, dated 06/29/06 with revision B dated 04/12/07, prepared by PTC, LLC, signed and sealed by Eric S. Nielsen, P.E., bearing the Miami-Dade County Product Control Approval stamp with the Notice of Acceptance number and approval date by the Miami-Dade County Product Control Division.

MISSILE IMPACT RATING: Large and Small Missile Impact Resistant

LABELING: Each unit shall bear a permanent label with the manufacturer's name or logo, Venice, Florida and following statement: "Miami-Dade County Product Control Approved", unless otherwise noted herein.

APPROVAL of this NOA shall be considered after an approval application has been filed and there has been no change in the applicable building code negatively affecting the performance of this product.

TERMINATION of this NOA will occur after the expiration date or if there has been a revision or change in the materials, use, and/or manufacture of the product or process. Misuse of this NOA as an endorsement of any product, for sales, advertising or any other purposes shall automatically terminate this NOA. Failure to comply with any section of this NOA shall be cause for termination and removal of NOA.

ADVERTISEMENT: The NOA number preceded by the words Miami-Dade County, Florida, and followed by the expiration date may be displayed in advertising literature. If any portion of the NOA is displayed, then it shall be done in its entirety.

INSPECTION: A copy of this entire NOA shall be provided to the user by the manufacturer or its distributors and shall be available for inspection at the job site at the request of the Building Official.

This NOA consists of this page 1 and evidence pages E-1 and E-2, as well as approval document mentioned above.

The submitted documentation was reviewed by **Jaime D. Gascon, P.E.**

PRODUCT CONTROL ACCEPTED

J. Gascon
4/17/07

Jeld-Wen, Inc. (OR)

NOTICE OF ACCEPTANCE: EVIDENCE SUBMITTED

A. DRAWINGS

1. Manufacturer's die drawings and sections.
2. Drawing No. **JELD0034**, titled "Premium Atlantic Vinyl PW (8300)" sheets 1 through 5 of 5, dated 06/29/06 with revision B dated 04/12/07, prepared by PTC, LLC, signed and sealed by Eric S. Nielsen, P.E.

B. TESTS

1. Test reports on 1) Air Infiltration Test, per FBC, TAS 202-94
   2) Uniform Static Air Pressure Test, Loading per FBC TAS 202-94
   3) Water Resistance Test, per FBC, TAS 202-94
   4) Large Missile Impact Test per FBC, TAS 201-94
   5) Cyclic Wind Pressure Loading per FBC, TAS 203-94
   6) Forced Entry Test, per FBC 2411 3.2.1, TAS 202-94

   along with marked-up drawings and installation diagram, prepared by National Certified Testing Laboratories, Test Report No. NCTL 210-3265-2, dated May 31, 2006, signed and sealed by Gerald J. Ferrara, P.E.

2. Test reports on 1) Air Infiltration Test, per FBC, TAS 202-94
   2) Uniform Static Air Pressure Test, Loading per FBC TAS 202-94
   3) Water Resistance Test, per FBC, TAS 202-94
   4) Large Missile Impact Test per FBC, TAS 201-94
   5) Cyclic Wind Pressure Loading per FBC, TAS 203-94
   6) Forced Entry Test, per FBC 2411 3.2.1, TAS 202-94

   along with marked-up drawings and installation diagram, prepared by National Certified Testing Laboratories, Test Report No. NCTL 210-3265-1, dated April 18, 2006, signed and sealed by Gerald J. Ferrara, P.E.

C. CALCULATIONS

1. Anchor verification calculations and structural analysis, complying with FBC-2004, dated 03/16/07, prepared by PTC, LLC, signed and sealed by Eric S. Nielsen, P.E. **Complies with ASTM E1300-02**

D. QUALITY ASSURANCE

1. Miami Dade Building Code Compliance Office (BCCO).

Jaime D. Gascon, P.E.
Chief, Product Control Division
NOA No 06-1017.04
Expiration Date: May 09, 2012
Approval Date: May 10, 2007

NOTICE OF ACCEPTANCE: EVIDENCE SUBMITTED

E. MATERIAL CERTIFICATIONS

1. Notice of Acceptance No. **06-1205.01** issued to E.I. DuPont DeNemours & Co., Inc. for their "DuPont **Sentry Glass ® Plus**" dated 02/15/07, expiring on 01/14/08.
2. Notice of Acceptance No. 06-1220.01 issued Spectus Systems – a Mikron Company for their "White Rigid PVC Extrusions", dated 01/11/2007, expiring on 12/26/2011.

F. STATEMENTS

1. Statement letter of conformance, dated 03/16/07, prepared by PTC, LLC, signed and sealed by Eric S. Nielsen, P.E.
2. Statement letter of no financial interest, dated 03/16/07, prepared by PTC, LLC, signed and sealed by Eric S. Nielsen, P.E.
3. Laboratory compliance letter for Test Report no. NCTL-210-3265-1 & 2, issued by National Certified Testing Laboratories, dated May 31, 2006, signed and sealed by Gerald J. Ferrara, P.E

G. OTHER

None

Jaime D. Gascon, P.E.
Chief, Product Control Division
NOA No 06-1017.04
Expiration Date: May 09, 2012
Approval Date: May 10, 2007

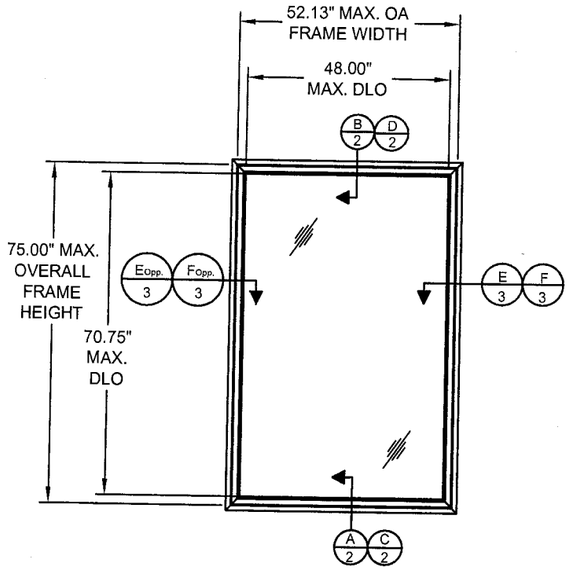

ELEVATION
PICTURE WINDOW

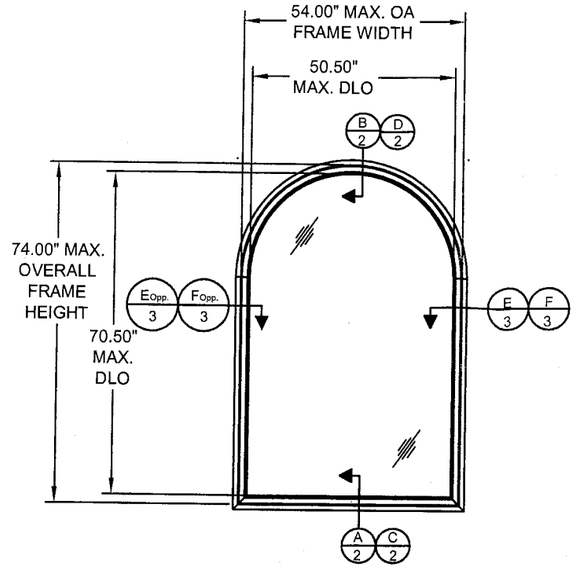

ELEVATION
RADIUS HEAD
PICTURE WINDOW

TABLE OF CONTENTS

SHEET	SHEET DESCRIPTION
1	ELEVATIONS, ANCHOR LAYOUTS AND NOTES
2	VERTICAL CROSS SECTIONS
3	HORIZONTAL CROSS SECTIONS & GLAZING DETAIL
4	BILL OF MATERIAL & COMPONENTS
5	ALTERNATE WINDOW CONFIGURATIONS

GENERAL NOTES:

1) THE PRODUCT SHOWN HEREIN IS DESIGNED AND MANUFACTURED TO COMPLY WITH THE 2004 FLORIDA BUILDING CODE CURRENT EDITION INCLUDING HVHZ.
2) WOOD BUCK OR STUD FRAMING TO BE DESIGNED AND ANCHORED TO PROPERLY TRANSFER ALL LOADS TO STRUCTURE, BUCK OR FRAMING IS RESPONSIBILITY OF ARCHITECT OR ENGINEER OF RECORD.
3) PRODUCTS ARE APPROVED FOR USE WHERE LARGE MISSILE IMPACT RESISTANCE IS REQUIRED. IMPACT PROTECTIVE SYSTEM IS NOT REQUIRED.
4) SEE DESIGN PRESSURE RATINGS SHEET 1.
5) DESIGN PRESSURE OF 50 PSF WAS ACHIEVED FOR THE 54" X 74" RADIUS HEAD P/W AS NOTED & APPROVED ON M-D N.O.A. 06-0407.01

INSTALLATION NOTES:

1) SHIM AS REQUIRED AT EACH ANCHOR LOCATION USING LOAD BEARING SHIMS. MAXIMUM ALLOWABLE SHIM STACK TO BE 1/4". SHIM WHERE SPACE GREATER THAN 1/16" IS PRESENT.
2) FOR WOOD FRAMING INSTALLATION USE #10 WOOD SCREWS WITH SUFFICIENT LENGTH TO ACHIEVE 1 3/4" MINIMUM EMBEDMENT INTO FRAMING.
3) FOR MASONRY INSTALLATION USE 3/16" DIAMETER ELCO TAPCONS WITH SUFFICIENT LENGTH TO ACHIEVE 1 1/4" MINIMUM EMBEDMENT INTO MASONRY.
4) FOR RECTANGULAR WINDOWS LOCATE ANCHORS AS SHOWN ON APPROPRIATE RECTANGULAR PICTURE WINDOW ANCHOR LAYOUT.
5) FOR ARCH TOP WINDOWS LOCATE ANCHORS AS SHOWN ON APPROPRIATE RADIUS HEAD PICTURE WINDOW ANCHOR LAYOUT.

LARGE MISSILE IMPACT

DESIGN PRESSURE RATINGS	
WINDOW SIZE	DESIGN PRESSURE
UP TO 52 1/8" X 75"	+50.0 PSF/-50.0 PSF
UP TO 54" X 74"	+50.0 PSF/-50.0 PSF

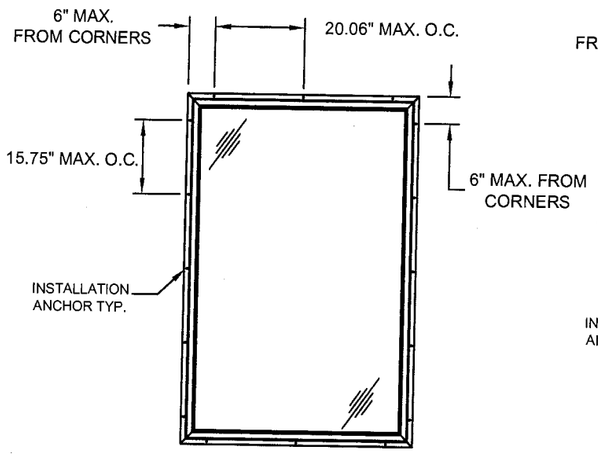

ANCHOR LAYOUT
PICTURE WINDOW (FIN FRAME)

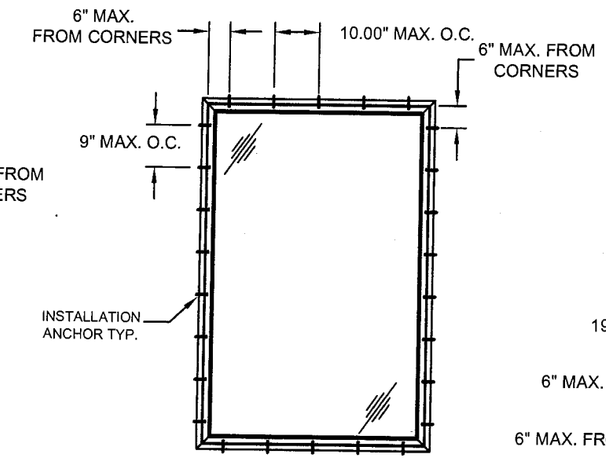

ANCHOR LAYOUT
PICTURE WINDOW (FLANGE FRAME)

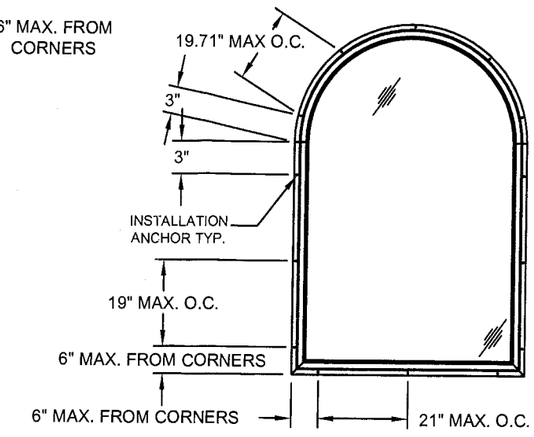

ANCHOR LAYOUT
RADIUS HEAD PICTURE
WINDOW (FIN FRAME)

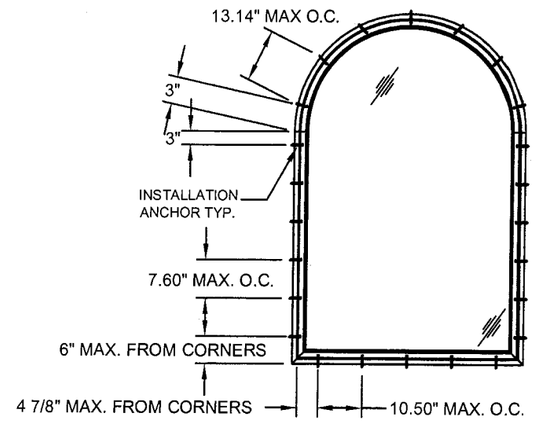

ANCHOR LAYOUT
RADIUS HEAD PICTURE
WINDOW (FLANGE FRAME)

REVISIONS

REV	DESCRIPTION	DATE	BY
B	AS REQUESTED BY MIAMI DADE	4/12/07	TK
A	AS REQUESTED BY MIAMI DADE	3/09/07	JKJ

JELD-WEN, INC.
355 CENTER CT., VENICE FL, 34285
TITLE: PREMIUM ATLANTIC VINYL PW (8300)
ELEVATIONS, ANCHOR LAYOUTS AND NOTES

DRN:	DATE:	DWG. NO:	SHEET:
BB	06/29/06	JELD0034	1 OF 5
SCALE: N.T.S.		REV: A	

PREPARED BY:
PTC, LLC
Phone 321.690.1788 Fax 321.690.1789

4/12/07
Eric S. Nielsen
Florida P. E. No. 41323
PTC, LLC
1535 Cogswell Street, Suite C25
Rockledge, Florida 32955
FBPE Certificate of Authorization NO. 25935

Approved as complying with the Florida Building Code
Date 05/10/2007
NOA# 06-1017.04
Miami Dade Product Control Division
By

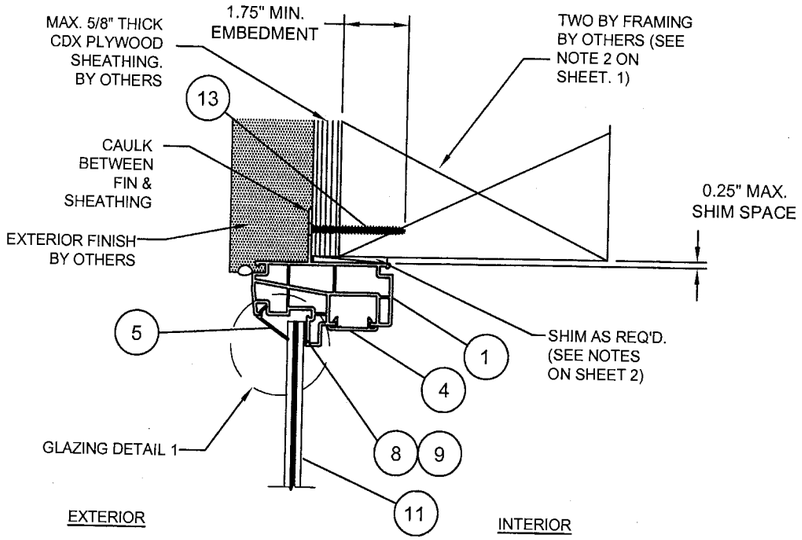

B/2 VERTICAL SECTION
FIN, WOOD

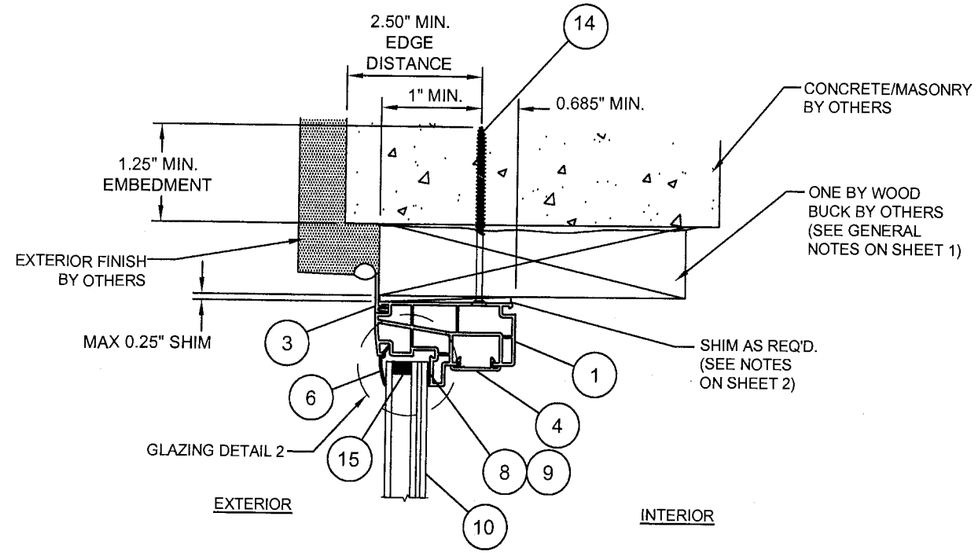

D/2 VERTICAL SECTION
FRAME, MASONRY

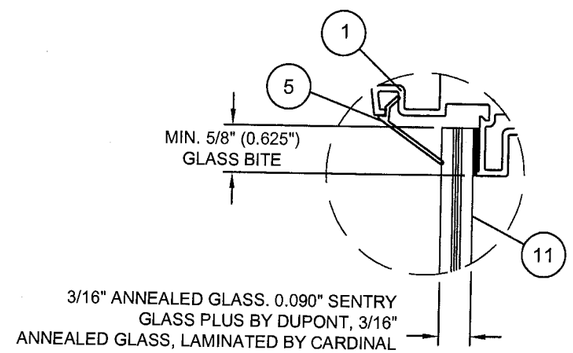

GLAZING DETAIL 1

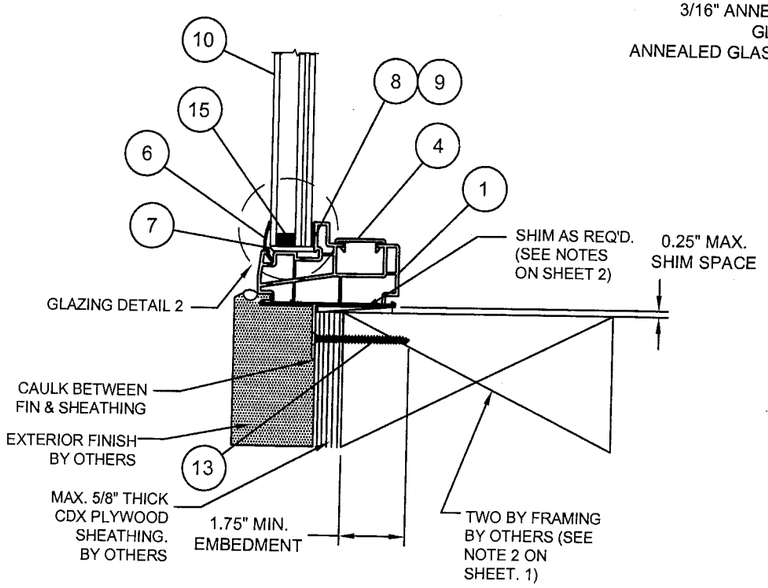

A/2 VERTICAL SECTION
FIN, WOOD

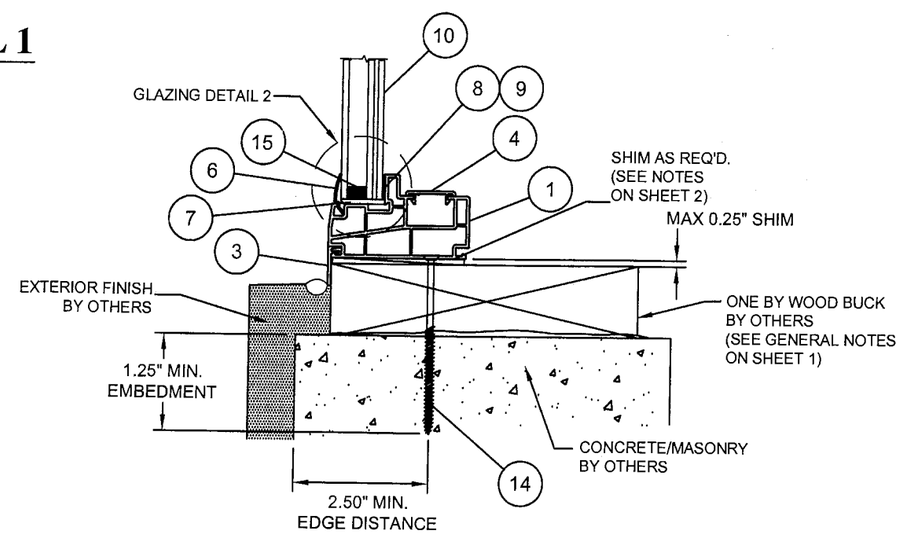

C/2 VERTICAL SECTION
FRAME, MASONRY

REVISIONS

REV	DESCRIPTION	DATE	BY
B	AS REQUESTED BY MIAMI DADE	4/12/07	TK
A	AS REQUESTED BY MIAMI DADE	3/09/07	JKJ

JELD-WEN, INC.
355 CENTER CT., VENICE FL, 34285
TITLE: PREMIUM ATLANTIC VINYL PW (8300) VERTICAL CROSS SECTIONS

DRW:	BB	DATE:	06/29/06
SCALE:	N.T.S.	DWG. NO:	JELD0034
REV:	A	SHEET:	2 OF 5

PREPARED BY:
PTC, LLC
Phone 321.690.1788 Fax 321.690.1789

4/12/07
Eric S. Nielsen
Florida P. E. No. 41323
PTC, LLC
1535 Cogswell Street, Suite C25
Rockledge, Florida 32955
FBPE Certificate of Authorization NO. 25935

Approved as complying with the Florida Building Code
Date 05/10/2007
NOA# 06-1017.04
Miami Dade Product Control Division
By

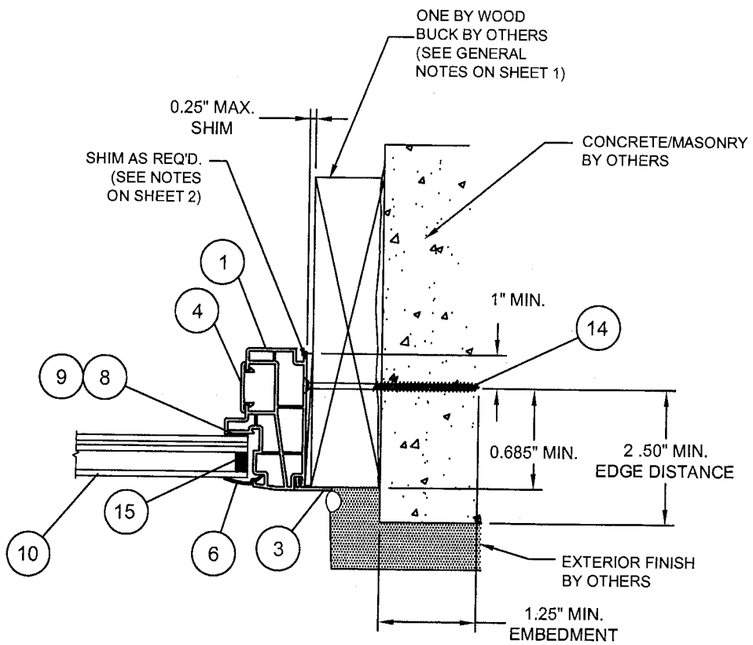

E/3 HORIZONTAL SECTION

FRAME, MASONRY

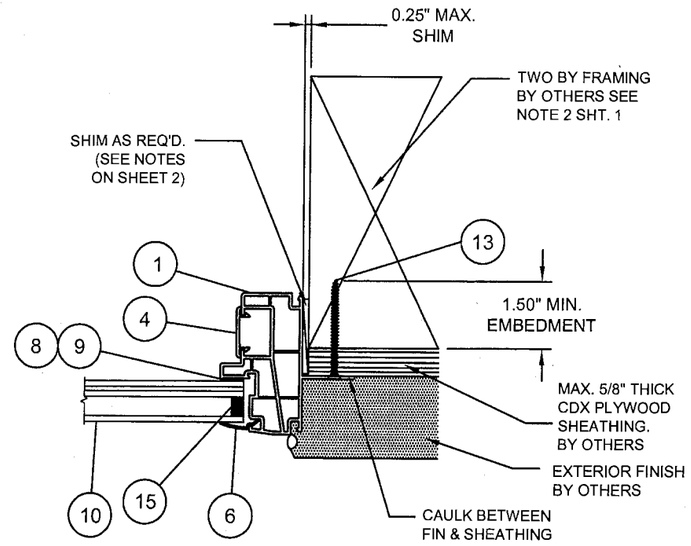

F/3 HORIZONTAL SECTION

FIN, WOOD

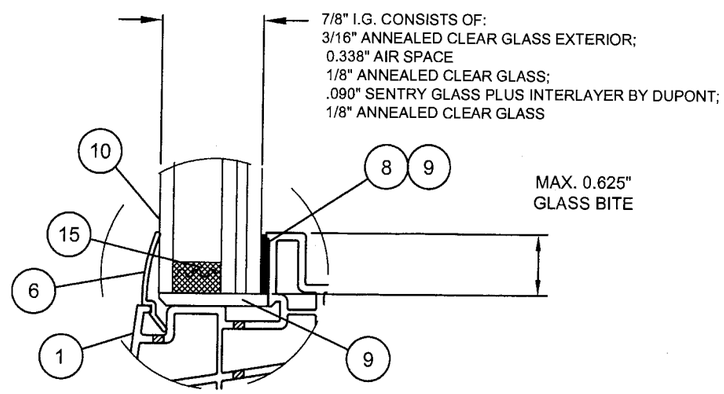

GLAZING DETAIL 2

REVISIONS

REV	DESCRIPTION	DATE	BY
B	AS REQUESTED BY MIAMI DADE	4/12/07	TK
A	AS REQUESTED BY MIAMI DADE	3/09/07	JKJ

JELD-WEN, INC.
355 CENTER CT., VENICE FL, 34285

TITLE: PREMIUM ATLANTIC VINYL PW (8300)
HORIZONTAL CROSS SECTIONS

DRN:	DATE:
BB	06/29/06
SCALE: N.T.S.	DWG. NO: JELD0034
REV: A	SHEET: 3 OF 5

PREPARED BY:
PTC, LLC
Phone 321.690.1788 Fax 321.690.1789

4/12/07
Eric S. Nielsen
Florida P. E. No. 41323
PTC, LLC
1535 Cogswell Street, Suite C25
Rockledge, Florida 32955
FBPE Certificate of Authorization NO. 25935

Approved as complying with the
Florida Building Code
Date 05/10/2007
NOA# 06-1017.04
Miami Dade Product Control
Division
By

BILL OF MATERIALS

NO.	PART NO.	DESCRIPTION	MATERIAL	MANUFACTURER
1	7131	HEAD, SILL & JAMB FRAME PVC EXTRUSION BY MIKRON	PVC	MIKRON
2		NOT USED		
3	8864	5/8" FLANGE	PVC	MIKRON
4	7057	POCKET COVER	PVC	MIKRON
5	7924	SINGLE GLAZED BEAD	PVC	MIKRON
6	6177	SINGLE GLAZED GLAZING BEAD	PVC	MIKRON
7	6573	SETTING BLOCK	PVC	MIKRON
8		DOW CORNING 995 SILICONE BACK BEDDING	SILICONE	
9		DOW CORNING 1199 SILICONE BACK BEDDING	SILICONE	
10		7/8" INSULATING LAMINATED GLASS - GLAZING DETAIL 1	GLASS	CARDINAL
11		7/16" LAMINATED GLASS - GLAZING DETAIL 2	GLASS	CARDINAL
12		NOT USED		
13		#10 WOOD SCREW CAPABLE OF ACHIEVING 1.75" MIN EMBEDMENT	STEEL	
14		3/16" ELCO TAPCON C.S ANCHOR OR EQUIV. CAPABLE OF ACHIEVING 1.25" MIN EMBEDMENT	STEEL	
15		SPACER VARIES		

1

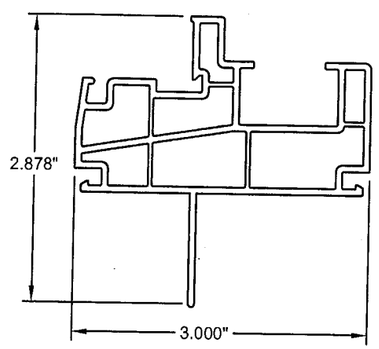

HEAD, SILL & JAMB FRAME TYP. WALL THICKNESS 0.065"

5

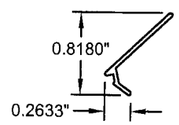

7/16" GLAZING BEAD TYP WALL THICKNESS 0.040"

3

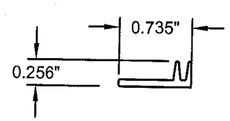

5/8" FLANGE TYP. WALL THICKNESS 0.060"

6

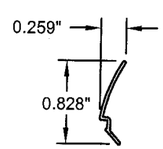

7/8" GLAZING BEAD TYP WALL THICKNESS 0.030"

4

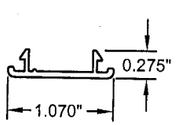

POCKET COVER TYP. WALL THICKNESS 0.060"

7

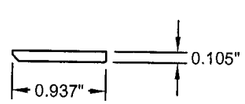

7/8" SETTING BLOCK TYP. WALL THICKNESS 0.105"

REVISIONS

REV	DESCRIPTION	DATE	BY
B	AS REQUESTED BY MIAMI DADE	4/12/07	TK
A	AS REQUESTED BY MIAMI DADE	3/06/07	JKJ

JELD-WEN, INC.
355 CENTER CT., VENICE FL, 34285
TITLE: PREMIUM ATLANTIC VINYL PW (8300) COMPONENTS AND B.O.M.

DRN: BB | DATE: 06/29/06
SCALE: N.T.S. | DWG. NO: JELD0034
REV: A | SHEET: 4 OF 5

PREPARED BY:
PTC, LLC
Phone 321.690.1788 Fax 321.690.1789

Eric S. Nielsen
Florida P. E. No. 41323
PTC, LLC
1535 Cogswell Street, Suite C25
Rockledge, Florida 32955
FBPE Certificate of Authorization NO. 25935

4/12/07

Approved as complying with the Florida Building Code
Date 05/10/2007
NOA# 06-1017.04
Miami Dade Product Control Division
By

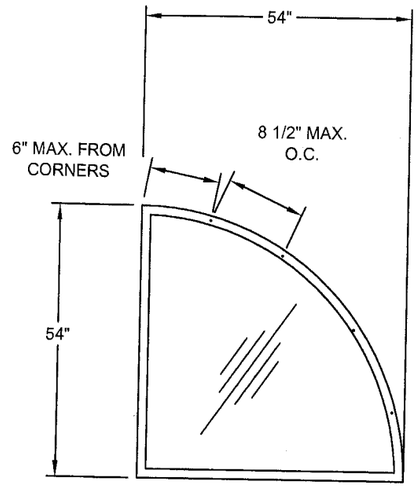

QUARTER ROUND

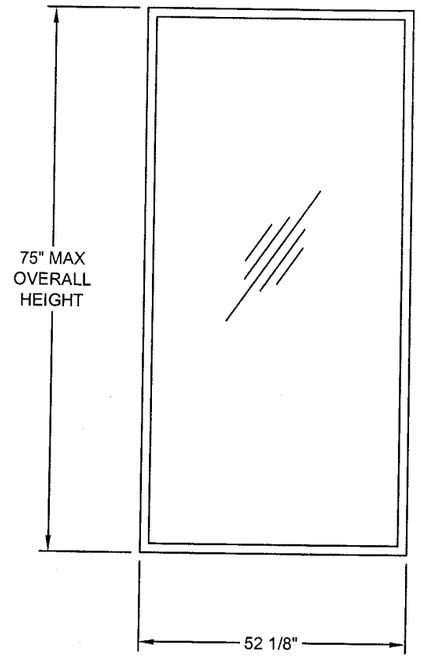

RECTANGLE

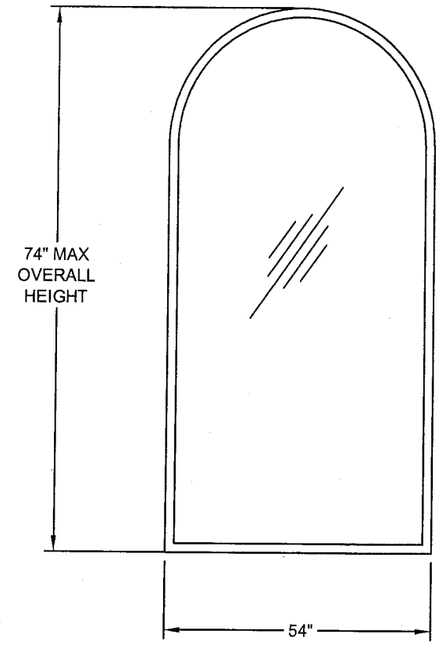

RADIUS TOP

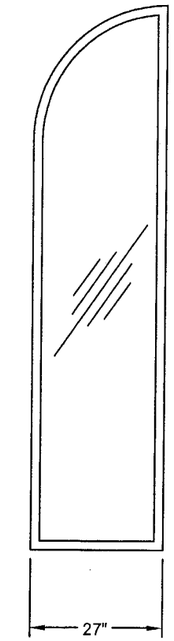

OPEN BOTTOM QUARTER ROUND

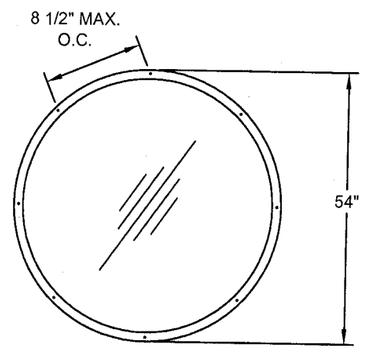

FULL ROUND

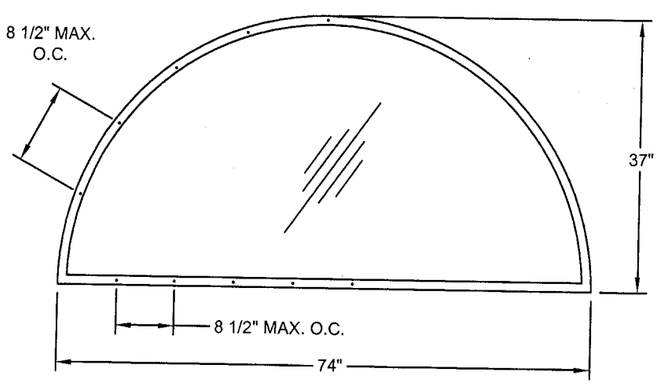

HALF ROUND

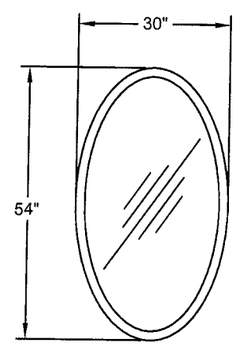

OVAL

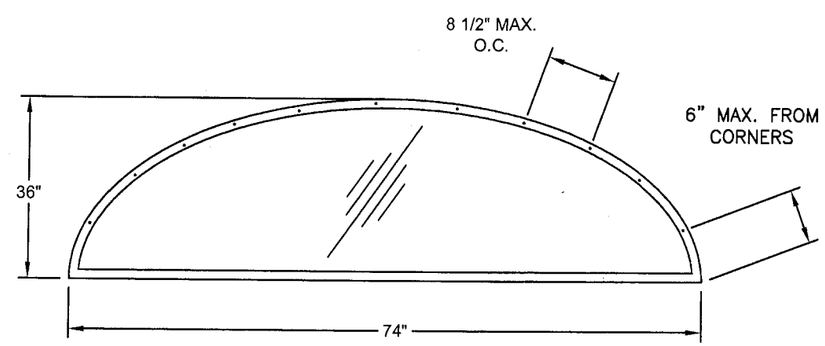

ELLIPSE

REVISIONS

REV	DESCRIPTION	DATE	BY
B	AS REQUESTED BY MIAMI DADE	4/12/07	TK
A	AS REQUESTED BY MIAMI DADE	3/08/07	JKJ

TITLE:

JELD-WEN, INC.
355 CENTER CT., VENICE FL, 34285
PREMIUM ATLANTIC VINYL PW (8300)
ALTERNATE WINDOW CONFIGURATIONS

PREPARED BY:

PTC, LLC
Phone 321.690.1788 Fax 321.690.1789

DRN:	BB	DATE:	06/29/06
SCALE:	N.T.S.	DWG. NO:	JELD0034
REV:	A	SHEET:	5 OF 5

Eric S. Nielsen
Florida P. E. No. 41323
PTC, LLC
1535 Cogswell Street, Suite C25
Rockledge, Florida 32955
FBPE Certificate of Authorization NO. 25935

Approved as complying with the Florida Building Code
Date 05/10/2007
NOA# 06-1017.04
Miami Dade Product Control Division
By