MIAMI-DADE COUNTY

BUILDING CODE COMPLIANCE OFFICE (BCCO)
PRODUCT CONTROL DIVISION

MIAMI-DADE COUNTY, FLORIDA
METRO-DADE FLAGLER BUILDING
140 WEST FLAGLER STREET, SUITE 1603
MIAMI, FLORIDA 33130-1563
(305) 375-2901 FAX (305) 375-2908

NOTICE OF ACCEPTANCE (NOA)

Arch Aluminum & Glass Company, Inc.
10200 NW 67th Street
Tamarac, FL 33321

SCOPE:

This NOA is being issued under the applicable rules and regulations governing the use of construction materials. The documentation submitted has been reviewed by Miami-Dade County Product Control Division and accepted by the Board of Rules and Appeals (BORA) to be used in Miami Dade County and other areas where allowed by the Authority Having Jurisdiction (AHJ).

This NOA shall not be valid after the expiration date stated below. The Miami-Dade County Product Control Division (In Miami Dade County) and/or the AHJ (in areas other than Miami Dade County) reserve the right to have this product or material tested for quality assurance purposes. If this product or material fails to perform in the accepted manner, the manufacturer will incur the expense of such testing and the AHJ may immediately revoke, modify, or suspend the use of such product or material within their jurisdiction. BORA reserves the right to revoke this acceptance, if it is determined by Miami-Dade County Product Control Division that this product or material fails to meet the requirements of the applicable building code.

This product is approved as described herein, and has been designed to comply with the Florida Building Code, including the High Velocity Hurricane Zone.

DESCRIPTION: "Series Magnum" Outswing Aluminum Doors w/ wo Transom

APPROVAL DOCUMENT: Drawing No. **06-002R1**, titled "Magnum series Aluminum Outswing Doors", sheets 1 through 9 of 9, dated 01/01/06 and last revised on Sep. 07, 2006, prepared by EngCo Inc., signed and sealed by Pedro De Figueiredo, P.E., bearing the Miami-Dade County Product Control Renewal stamp with the Notice of Acceptance number and expiration date by the Miami-Dade County Product Control Division.

MISSILE IMPACT RATING: Large and Small Missile Impact Resistant

Limitations:

1. **Single door 42" wide w/ wo transom is limited with glazing G1 (9/16" O.A. HS laminated glass)**
2. **Maximum transom height is limited to 22" above the door.**
3. **Storefront & curtain wall is not a part of this approval**

LABELING: Each unit shall bear a permanent label with the manufacturer's name or logo, city, state and following statement: "Miami-Dade County Product Control Approved", unless otherwise noted herein.

RENEWAL of this NOA shall be considered after a renewal application has been filed and there has been no change in the applicable building code negatively affecting the performance of this product.

TERMINATION of this NOA will occur after the expiration date or if there has been a revision or change in the materials, use, and/or manufacture of the product or process. Misuse of this NOA as an endorsement of any product, for sales, advertising or any other purposes shall automatically terminate this NOA. Failure to comply with any section of this NOA shall be cause for termination and removal of NOA.

ADVERTISEMENT: The NOA number preceded by the words Miami-Dade County, Florida, and followed by the expiration date may be displayed in advertising literature. If any portion of the NOA is displayed, then it shall be done in its entirety.

INSPECTION: A copy of this entire NOA shall be provided to the user by the manufacturer or its distributors and shall be available for inspection at the job site at the request of the Building Official.

This NOA **renews NOA # 06-0705.05** and consists of this page 1 and evidence page E-1, as well as approval document mentioned above.

The submitted documentation was reviewed by **Ishaq I. Chanda, P.E.**

PRODUCT CONTROL ACCEPTED

11/17/16

Arch Aluminum & Glass Company, Inc.

NOTICE OF ACCEPTANCE: EVIDENCE SUBMITTED

A. DRAWINGS (transferred from file # **06-0705.05**)

1. Manufacturer's die drawings and sections.
2. Drawing No. **06-002R1**, titled "Magnum series Aluminum Outswing Doors", sheets 1 through 9 of 9, dated 01/01/06 and last revised on Sep. 07, 2006, prepared by EngCo Inc., signed and sealed by Pedro De Figueiredo, P.E.

B. TESTS (transferred from file # **06-0705.05**)

1. Test reports on 1) Air Infiltration Test, per FBC, TAS 202-94
   2) Uniform Static Air Pressure Test, Loading per FBC, TAS 202-94
   3) Water Resistance Test, per FBC, TAS 202-94 (See NOA limitation)
   4) Forced Entry Test, per FBC 2411 3.2.1 and TAS 202-94
   5) Large Missile Impact Test per FBC, TAS 201-94
   6) Cyclic Wind Pressure Loading per FBC, TAS 203-94

along with marked-up drawings and installation diagram of outswing aluminum entrance door w/wo transoms, prepared by Fenestration Testing Laboratory, Inc., Test Report No. **FTL-2764,** dated 09/20/00, signed and sealed by Alan P. Gonzales, P.E., Test Report No(s). **FTL-3152,** dated 07/18/01 and **FTL-3151,** dated 08/13/01, both signed and sealed by Luis Figueredo, P.E.,

C. CALCULATIONS (transferred from file # **06-0705.05**)

1. Anchor Calculations and structural analysis, complying with FBC-2004, prepared by EngCo Inc., dated 06/21/06, signed and sealed by Pedro De Figueiredo, P.E.
2. Complies with ASTM E1300- 98 &-02

D. QUALITY ASSURANCE

1. Miami Dade Building Code Compliance Office (BCCO).

E. MATERIAL CERTIFICATIONS

1. Notice of Acceptance No. 01-1204.01 issued to E. I. DuPont DeNemours for "***Sentry Glass Plus***", expiring on 01/14/07.

F. STATEMENTS (transferred from file # **06-0705.05**)

1. Statement letter of conformance and no financial interest, prepared by Engco Inc., dated 06/20/06, signed and sealed by Pedro DeFigueiredo, P.E.
2. Statement letter of compliance, part of above referenced test reports.

G. OTHER

1. This **renews NOA # 06-0705.05** expiring January 03, 2007.
2. Previous associated files to this approval are NOA(s) # 01-1102.01.

Ishaq I. Chanda

Ishaq I. Chanda, P.E.
Product Control Examiner
NOA No 06-0818.02
Expiration Date: November 23, 2011
Approval Date: November 23, 2006

GENERAL NOTES:

1- CODE: THIS PRODUCT HAS BEEN TESTED AND DESIGNED IN ACCORDANCE WITH THE FLORIDA BUILDING CODE 2004 EDITION - (INCLUDING THE HIGH VELOCITY HURRICANE ZONE)

2- DEFINITION: THIS PRODUCT IS AN ALUMINUM OUTSWING DOOR WITH LARGE MISSILE IMPACT RESISTANT LAMINATED GLASS.

3- POSTING:
"ALUMINUM IMPACT DOOR LINE-MAGNUM SERIES
ARCH ALUMINUM & GLASS CO., INC.
TAMARAC - BROWARD COUNTY - FL
DADE COUNTY PRODUCT CONTROL APPROVED"

4- DESIGN LOADS: LOADS MUST BE CALCULATED BASED ON ASCE 7, BY A PROFESSIONAL ARCHITECT OR ENGINEER FOR EACH SPECIFIC PROJECT.

5- MATERIAL: ALL ALUMINUM PARTS TO BE 6063-T6 OR AS INDICATED AND GLAZING TO BE LAMINATED IMPACT RESISTANT GLASS AS SPECIFIED ON THIS APPROVAL.

6- FASTENERS: ASSEMBLY SCREWS AND ANCHORS SHALL BE AS SPECIFIED IN THIS CURRENT SET OF DRAWINGS.

7- USE: IT SHALL BE THE RESPONSIBILITY OF THE CONTRACTOR, ARCHITECT OR ENGINEER OF RECORD TO VERIFY THE FOLLOWING:
7.1- THE STABILITY OF THE STRUCTURE WHERE THE UNIT IS TO BE ATTACHED INSURING PROPER ANCHORAGE.
7.2- THE SITE SPECIFIC PROJECT CRITERIA, SUCH AS BUT NOT LIMITED TO, LOCAL CODE REQUIREMENTS, DESIGNED PRESSURES ETC.
7.3- THAT THIS APPROVAL IS ADEQUATE TO THE SPECIFIC PROJECT.

8- 33 1/3% INCREASE IN ALLOWABLE LOADS HAVE NOT BEEN USED IN THE DESIGN OF THE ANCHORS FOR THIS PRODUCT APPROVAL, HOWEVER, WOOD ANCHORS WITH 1.6 INCREASE FOR WIND LOAD DURATION HAVE BEEN USED.

9- MATERIALS, INCLUDING BUT NOT LIMITED TO STEEL/ METAL SCREWS, THAT COME INTO CONTACT WITH OTHER DISSIMILAR MATERIALS SHALL MEET THE REQUIREMENTS OF 2004 FBC SECTION 2003.8.4.

APPROVED CONFIGURATIONS

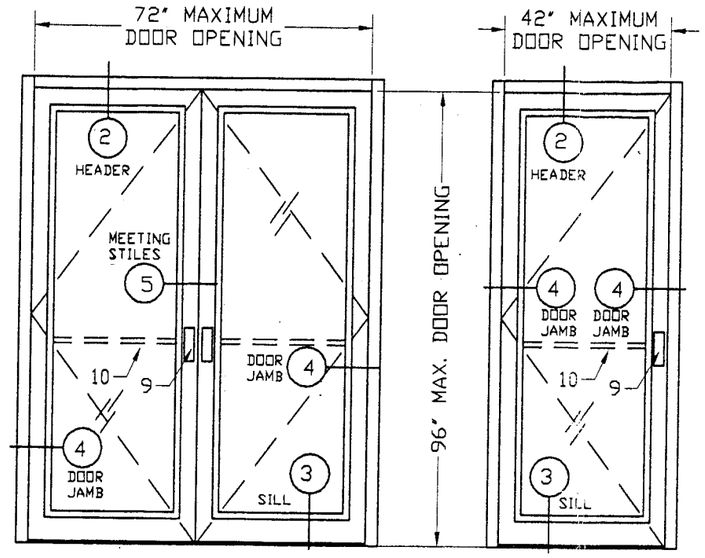

XX OR X
PAIR OR SINGLE DOOR

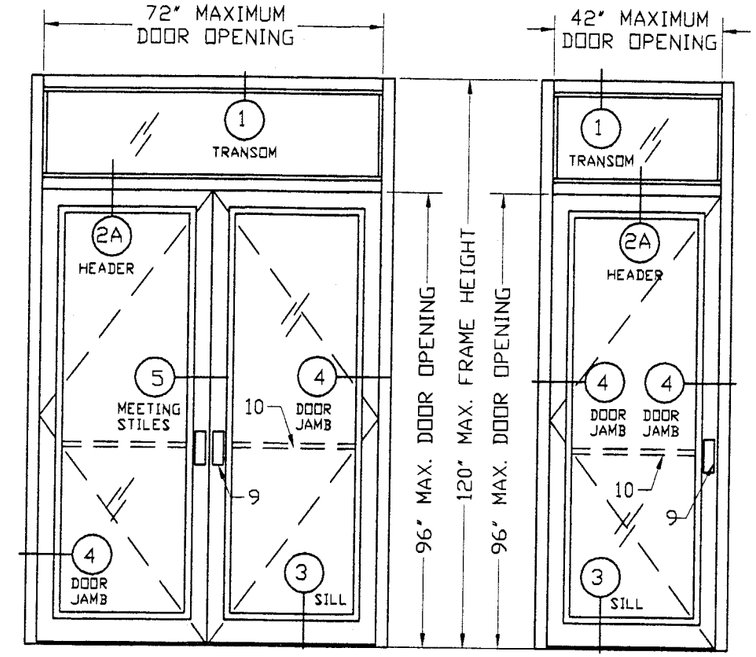

O/XX OR O/X
PAIR OR SINGLE DOOR WITH TRANSOM

PRODUCT RENEWED
as complying with the Florida Building Code
Acceptance No 06-1017.06
Expiration Date JAN 03, 2012
By Ishaq I. Chanda
Miami-Dade Product Control Division

USER INSTRUCTIONS:
1- DETERMINE PROJECT DESIGN WIND LOAD PRESSURES (Pd) AS PER ITEM 4 OF GENERAL NOTES, SHEET 1.

2- VERIFY IF MAXIMUM DOOR OPENINGS DO NOT EXCEED THE LIMITS ON THESE DRAWINGS.

3- VERIFY IF MAXIMUM DESIGNED WIND LOAD PRESSURES (Pd) FOR THE PROJECT DOES NOT EXCEED THE MAXIMUM ALLOWABLE PRESSURE Pda= 100 PSF

4- INCORPORATE A VALID NOTICE OF ACCEPTANCE FOR THE FRAMING WHEN DOORS ARE TO BE PART OF A STOREFRONT OR CURTAIN WALL ELEVATION.

MAXIMUM ALLOWABLE
PRESSURE
Pda= ±100 PSF

NOTE: SEE USER INSTRUCTIONS

MANUFACTURER:
Arch Aluminum & Glass Co. Inc.
10200 NW 67TH STREET
TAMARAC - FL - 33321
TEL: (800) 432-8132
FAX: (954) 724-9293

PRODUCT:
Aluminum Impact Door Line
MAGNUM SERIES
OUTSWING DOORS

Engineering:
EngCo Inc.
CA 8116
6971 W. Sunrise Blvd. 104
Plantation, Fl. 33313
Tel.: (954) 585-0304
Fax: (954) 585-0305

SEP 07 2006
Pedro De Figueiredo, PE
PE 52609

DRAFTING:
PK DRAFTING & MORE

Date: 01/01/06
Scale: NA
Design by: PPMF

PRODUCT CONTROL DIVISION:
PRODUCT REVISED
as complying with the Florida Building Code
Acceptance No 06-0705.05
Expiration Date JAN 3, 2007
By Manuel Perez
Miami-Dade Product Control Division

Drawing Number
06-002R1

TABLE 1 – ALLOWABLE DESIGNED PRESSURES FOR DOOR GLAZING TYPES:

ITEM#	DESCRIPTION	Pd - ALLOWABLE PRESSURE (PSF)
G1	9/16" LAMINATED W/ (2) 1/4" HS GLASS LITES WITH 0.09 SENTRY GLASS PLUS INTERLAYER	±100
G2	9/16" LAMINATED W/ (2) 1/4" ANNEAL GLASS LITES WITH 0.09 SENTRY GLASS PLUS INTERLAYER	±100

TABLE 2– ALLOWABLE DESIGNED PRESSURES FOR HARDWARE CONFIGURATIONS:

	ITEM#	LOCATION	DESCRIPTION	SUPPLIER REMARKS	Pd - ALLOWABLE PRESSURE (PSF)
HINGES PIVOTS	H1	HINGE STILES	ALUMINUM ROTON HINGE	HAGER	± 100
	H2		4 1/2" STEEL BUTT HINGES	REGENT	
	H3		4 1/2" BRASS BUTT HINGES	HAGER	
LOCKS	L1	ACTIVE STILE	3 POINT LOCK KEY OPERATED FROM EXTERIOR AND THUMB TURN ON INTERIOR	ADAMS RITE	± 100
	L2	INACTIVE STILE	2 POINT LOCK OPERATED ON INTERIOR WITH THUMB TURN		

LOCK OPTIONS & NOTES:

A- (X) SINGLE LEAF DOORS:
SINGLE LEAF DOORS FITTED WITH 3 POINT LOCK (L1 OPTION)

B- (XX) DOUBLE LEAF DOORS:

B1- ACTIVE DOOR:
ACTIVE LEAF DOOR FITTED WITH 3 POINT LOCK (L1 OPTION)

B2- INACTIVE DOOR:
INACTIVE LEAF DOOR FITTED WITH 2 POINT LOCK (L2 OPTION)

NOTES:
1- THREE POINT LOCK SYSTEM WITH 8 PLY HOOK LOCK BOLT BY ADAMS RITE #4015 & 4016, KEY OPERATED ON EXTERIOR AND THUMB-TURN ON INTERIOR, LOCATED AT 34" FROM BOTTOM OF PANEL.

2- TWO POINT LOCK SYSTEM ADAMS RITE#1880 WITH THUMB TURN ON THE INTERIOR, LOCATED AT 34" FROM BOTTOM OF PANEL.

BILL OF MATERIALS

MISCELLANEOUS DOOR COMPONENTS:

ITEM#	PART #	DESCRIPTION	MATERIAL	SUPPLIER/REMARKS
1	V2104	TAPE 1/2x1/8	-	NORTON
2	995	GLAZING SEALANT	SILICONE	DOW CORNING
3	H-65	BULB GASKET	PVC	UNIVERSAL RUBBER
4	H-63	WEDGE-IN GASKET	NEOPRENE	UNIVERSAL RUBBER
5	V2100	TAPE 3/8x1/4	-	NORTON
6	H-62C	SETTING BLOCK	NEOPRENE	UNIVERSAL RUBBER
7	S-PILE	PILE W'STRIPPING	-	SCHLEGEL
8	-	BULB W'STRIPPING	VINYL	PEMKO
9	AR800	PULL HANDLE @ 42 1/2"	6063-T6	ARCH ALUMINUM
10	1061	PUSH BAR @ 42 1/2"	6063-T5	ARCH ALUMINUM
11	TR36	3/8" THREADED ROD W/ NUT		ARCH ALUMINUM
12	347A	TOP RAIL RAIN CAP	6063-T5	PEMKO
13	68AR	TOP RAIL RAIN CAP	6063-T5	PEMKO
14	725047	BOTTOM SWEEP W/ BLADE	6063-T5	PEMKO
15	H-15	4.5X5 BUTT HINGE	BRASS	HAGER
16	355AV	ASTRAGAL	6063-T5	PEMKO
17	780-054	ROTON HINGE	ALUMINUM	PEMKO
18	26383	WEATHERING CHANNEL	6063-T5	ARCH ALUMINUM
19	H74T	THRESHOLD GASKET	NEOPRENE	UNIVERSAL RUBBER

NOTE: ITEMS #9 AND #10 ARE OPTIONAL.

FRAMING & DOOR PARTS (MANUFACTURED BY ARCH ALUMINUM)

ITEM#	PART #	DESCRIPTION	MATERIAL
F1	3001	DOOR HEADER/TRANSOM	6063-T6
F2	3000	DOOR HEADER/JAMB	6063-T6
F3	1012	ALTERNATE DOOR HEADER	6063-T6
F4	3004	SHEAR BLOCK	6063-T6
F5	3003	GLASS STOP	6063-T6
F6	3008	TRANSOM GLASS STOP	6063-T6
F7	3009	TRANSOM GLASS STOP	6063-T6
D1	44022	ACTIVE STILE	6063-T5
D2	44021	INACTIVE STILE	6063-T5
D3	44020	HINGE STILE	6063-T5
D4	44024	6 1/2" BOTTOM RAIL	6063-T5
D5	44023	3 1/2" TOP RAIL	6063-T5
D6	1040	4"X1/2" SADDLE THRESHOLD	6063-T5
D7	1042	4"X1/2" BUMPER THRESHOLD	6063-T5
D7A	BTHF2	4" WATER THRESHOLD	6063-T6
D8	1046A	STD DOOR STOP	6063-T5
D8A	AGA95	HEADER DOOR STOP	6063-T5
D8B	H67	DOOR STOP CLIP	SS 301/302
D9	44048	EXTERIOR GLASS STOP	6063-T5
D9A	44047	INTERIOR GLASS STOP	6063-T5
D10		FLUSH BOLT GUIDE	SS

TABLE 3– ALLOWABLE DESIGNED PRESSURES BASED ON DOOR OPENING AND WATER INFILTRATION

DOOR OPENING	72x96	42x96	36x96
PRESSURE	±100	±100	±100

CASE 1: WHERE WATER INFILTRATION IS NOT ACCEPTABLE

1- ALLOWABLE DESIGN PRESSURE IS VALID ONLY FOR UNITS INSTALLED WITH SECTIONS 3 AND 5 ON SHEET 8

2- DOOR SECTION 3 AND 5 ON SHEETS 6 AND 7 ARE NOT ACCEPTABLE FOR USE WITH THIS APPLICATION.

CASE 2: WHERE WATER INFILTRATION IS ACCEPTABLE

1- ALLOWABLE DESIGN PRESSURE 1 IS VALID ONLY FOR UNITS INSTALLED AT LOCATIONS PROTECTED BY A OVERHANG MEETING CRITERIA AS PER ILLUSTRATION 'Z' OR IN NON-HABITABLE AREAS WHERE WATER INFILTRATION IS ACCEPTABLE.

2- DOOR SECTIONS 3 AND 5 AS ILLUSTRATED IN SHEETS 6 AND 7 ARE ACCEPTABLE FOR USE WITH THIS APPLICATION.

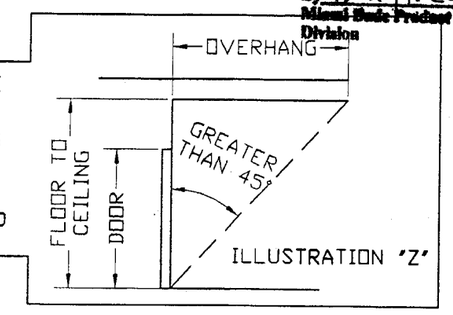

ILLUSTRATION 'Z'

PRODUCT RENEWED
as complying with the Florida Building Code
Acceptance No. 06-1017.06
Expiration Date JAN 03, 2012
By Ishaq I. Khan
Miami-Dade Product Control Division

PRODUCT REVISED
as complying with the Florida Building Code
Acceptance No. 06-0705.05
Expiration Date JAN 3, 2009
By Manuel Perez
Miami-Dade Product Control Division

MANUFACTURER:
Arch Aluminum & Glass Co. Inc.
10200 NW 67TH STREET
TAMARAC - FL - 33321
TEL: (800) 432-8132
FAX: (954) 724-9293

PRODUCT:
Aluminum Impact Door Line
MAGNUM SERIES
OUTSWING DOORS

Engineering:
EngCo Inc.
CA 8116
6971 W. Sunrise Blvd. 104
Plantation, Fl. 33313
Tel.: (954) 585-0304
Fax: (954) 585-0305

SEP 07 2006
Pedro De Figueiredo, PE
PE# 52609

DRAFTING:
PK DRAFTING & MORE

Date: 01/01/06
Scale: NA
Design by: PPMF

PRODUCT CONTROL DIVISION:

Drawing Number
06-002R1

DOOR COMPONENTS

D1- ACTIVE STILE

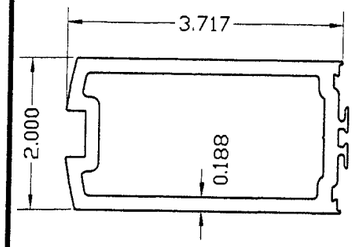

D2- INACTIVE STILE

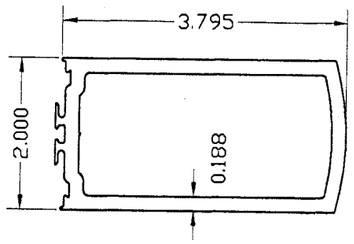

D3- HINGE STILE

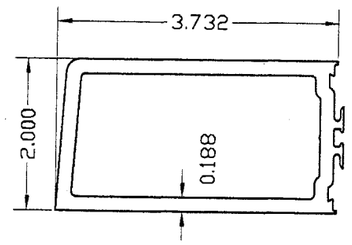

D8- STD. DOOR STOP

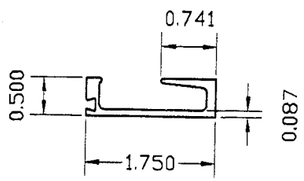

D8A- HEADER DOOR STOP

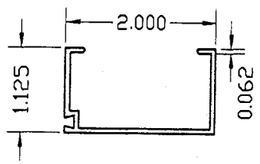

D8B- 1 1/8" CLIP W/ #10X1/2" PHMS 6" FROM ENDS AND 12"OC

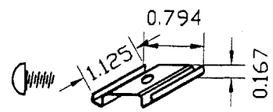

D4- BOTTOM RAIL

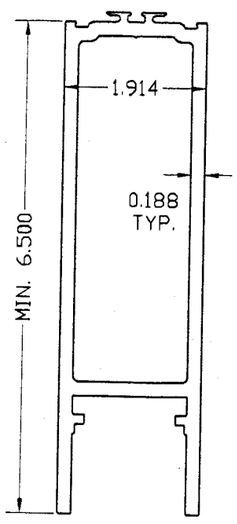

D5- TOP RAIL

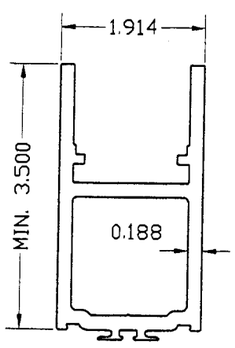

D9- EXTERIOR GLASS STOP

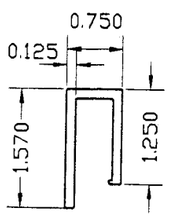

D9A- INTERIOR GLASS STOP

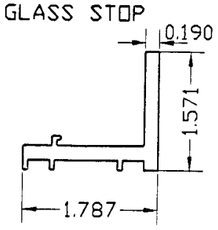

D6- SADDLE THRESHOLD

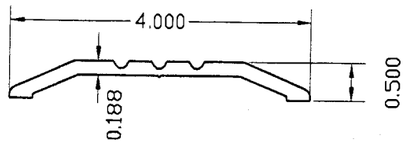

D7- BUMPER THRESHOLD

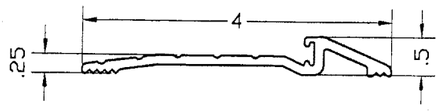

D7A- WATER BUMPER THRESHOLD

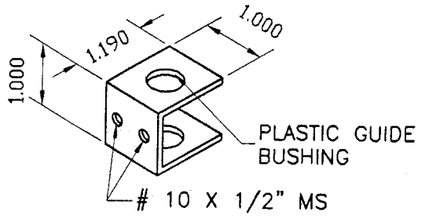

D10- FLUSH BOLT GUIDE STAINLESS STEEL

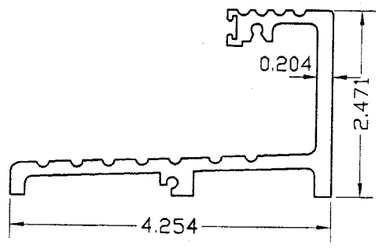

FRAMING COMPONENTS

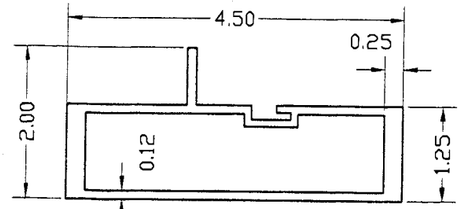

F1- 3001
DOOR TRANSOM/SIDELITE

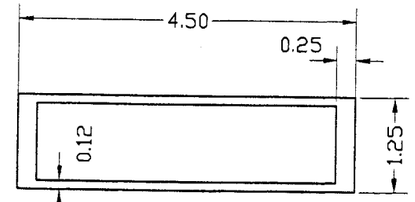

F2- 3000
DOOR HEADER/JAMB

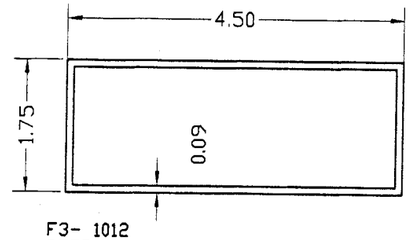

F3- 1012
DOOR TRANSOM/HEADER
APPLICABLE FOR OVERHEAD CONCEALED CLOSER

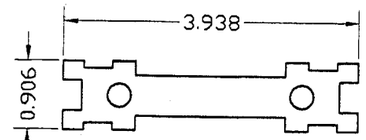

F4- FRAME SHEAR BLOCK

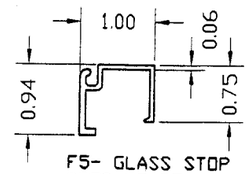

F5- GLASS STOP
DOOR HEADER/SIDELITE

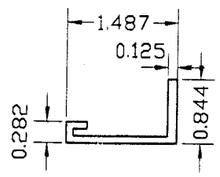

F6- TRANSOM GLASS STOP

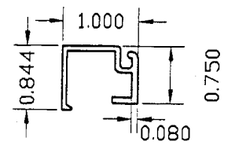

F7- TRANSOM GLASS STOP

WEATHERING COMPONENTS

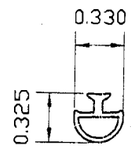

3- GASKET
H-65 PVC
use w/ D8 & D8A

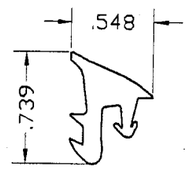

4- WEDGE-IN GASKET
H63 NEOPRENE
use w/ F5 & F7

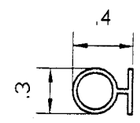

8- BULB
WEATHERSTRIPPING
VINYL
use w/ D7A

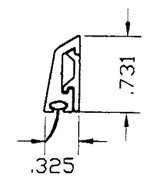

14- BOTTOM SWEEP
725049 6063-T5 WITH
NEOPRENE GASKET 425950

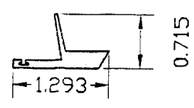

16- ASTRAGAL

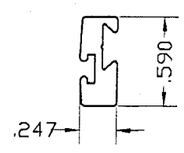

18- WEATHERING
CHANNEL 26383

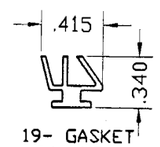

19- GASKET
H74T NEOPRENE
use w/ D7A

PRODUCT RENEWED
as complying with the Florida Building Code
Acceptance No. 06-1017.06
Expiration Date JAN. 3, 2007
By Ishaq I. Chand
Miami-Dade Product Control Division

MANUFACTURER:
Arch Aluminum & Glass Co. Inc.
10200 NW 67TH STREET
TAMARAC - FL - 33321
TEL: (800) 432-8132
FAX: (954) 724-9293

PRODUCT:
Aluminum Impact Door Line
MAGNUM SERIES
OUTSWING DOORS

Engineering:
EngCo Inc.
CA 8116
6971 W. Sunrise Blvd. 104
Plantation, Fl. 33313
Tel.: (954) 585-0304
Fax: (954) 585-0305

SEP 07 2006
Pedro De Figueiredo, PE
PE 52609

DRAFTING:
PK DRAFTING & MORE

Date: 01/01/06
Scale: NA
Design by: PPMF

PRODUCT CONTROL DIVISION:

PRODUCT REVISED
as complying with the Florida Building Code
Acceptance No. 06-0705.05
Expiration Date JAN. 3, 2007
By Manuel Perez
Miami-Dade Product Control Division

Drawing Number
06-002R1

GLAZING DETAILS

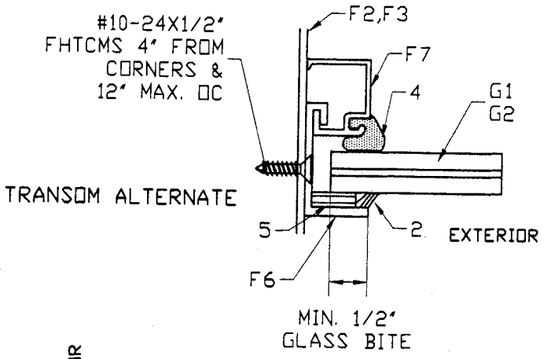

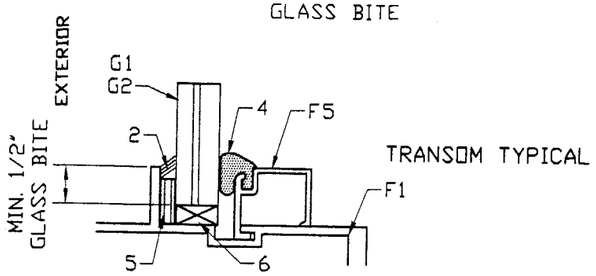

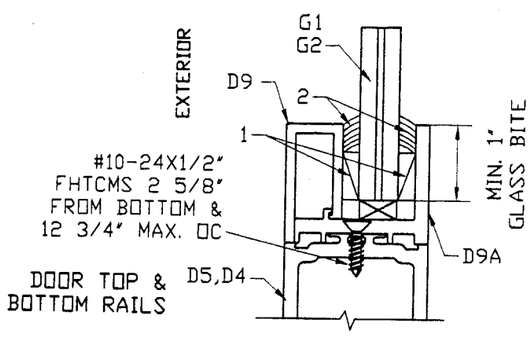

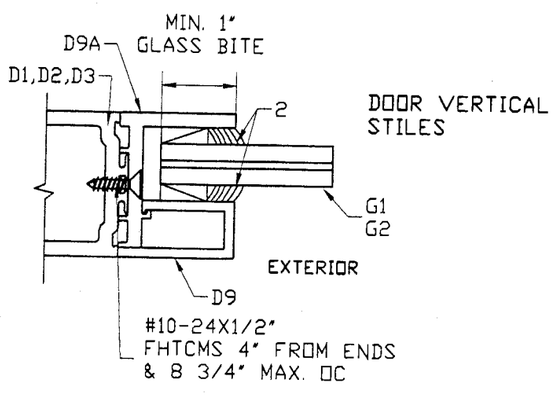

HINGE OPTIONS

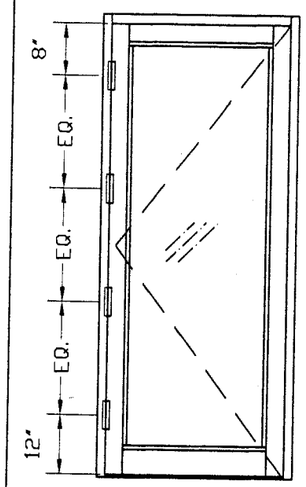

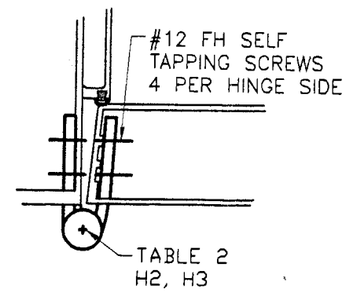

FOUR HINGES LOCATED
8" FROM CL TO TOP OF DOOR
12" FROM CL TO BOTTOM OF DOOR
AND EQUALLY SPACED IN BETWEEN

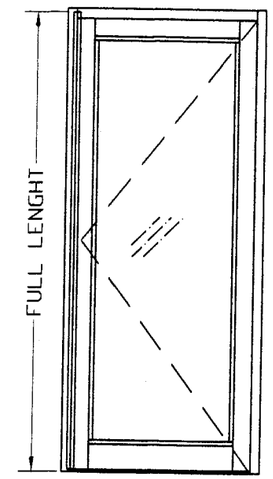

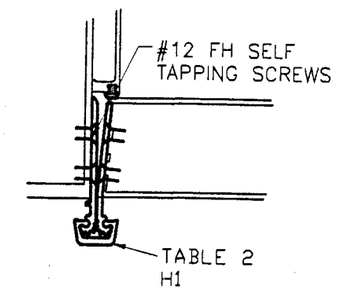

CONTINUOUS ALUMINUM ROTON HINGE
FASTENED TO FRAME AND DOOR
STILE WITH:
(27) TOTAL SCREWS ON 8' DOORS
(25) TOTAL SCREWS ON 7' DOORS

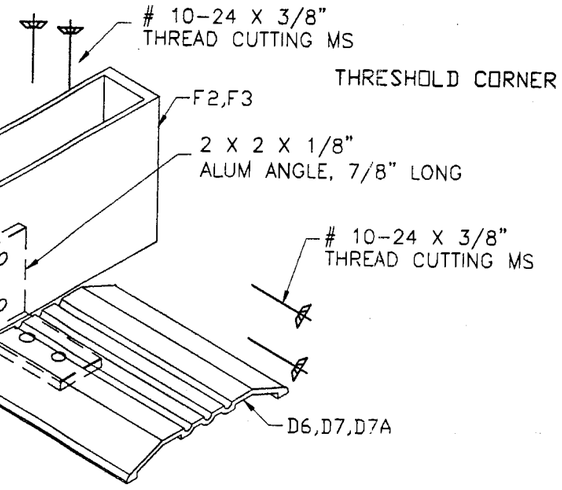

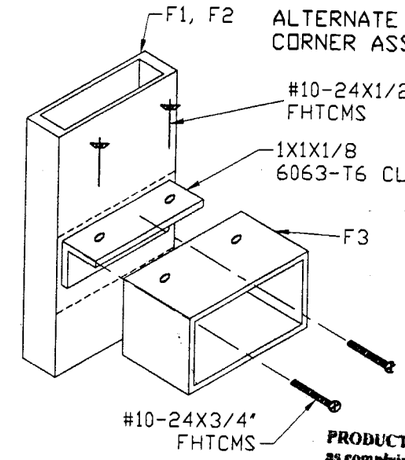

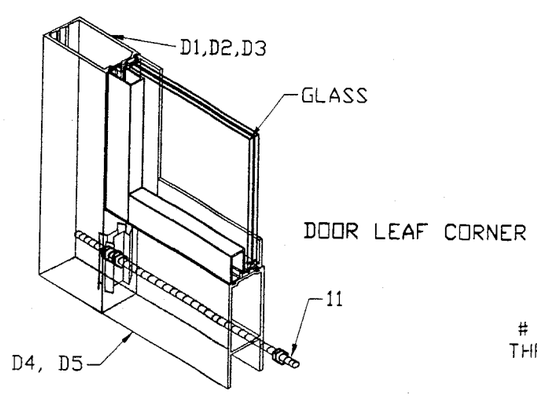

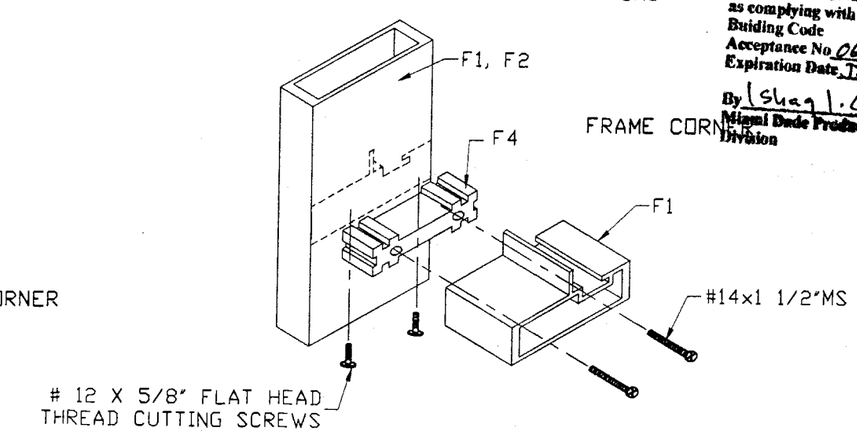

PRODUCT RENEWED
as complying with the Florida Building Code
Acceptance No. 06-1017-06
Expiration Date JAN 03 2012
By Shay I. Chandad
Miami Dade Product Control Division

MANUFACTURER:
Arch Aluminum & Glass Co. Inc.
10200 NW 67TH STREET
TAMARAC - FL - 33321
TEL: (800) 432-8132
FAX: (954) 724-9293

PRODUCT:
Aluminum Impact Door Line
MAGNUM SERIES
OUTSWING DOORS

Engineering:
EngCo Inc.
CA 8116
6971 W. Sunrise Blvd. 104
Plantation, Fl. 33313
Tel.: (954) 585-0304
Fax: (954) 585-0305

SEP 07 2006

Pedro De Figueiredo, PE
PE 52609

DRAFTING:
PK DRAFTING & MORE

Date: 01/01/06
Scale: NA
Design by: PPMF

PRODUCT CONTROL DIVISION:

PRODUCT REVISED
as complying with the Florida Building Code
Acceptance No. 06-0705.05
Expiration Date JAN. 3, 2007
By Manuel Perez
Miami Dade Product Control Division

Drawing Number
06-002R1

TRANSOM DETAILS W/ 3000 FRAMING

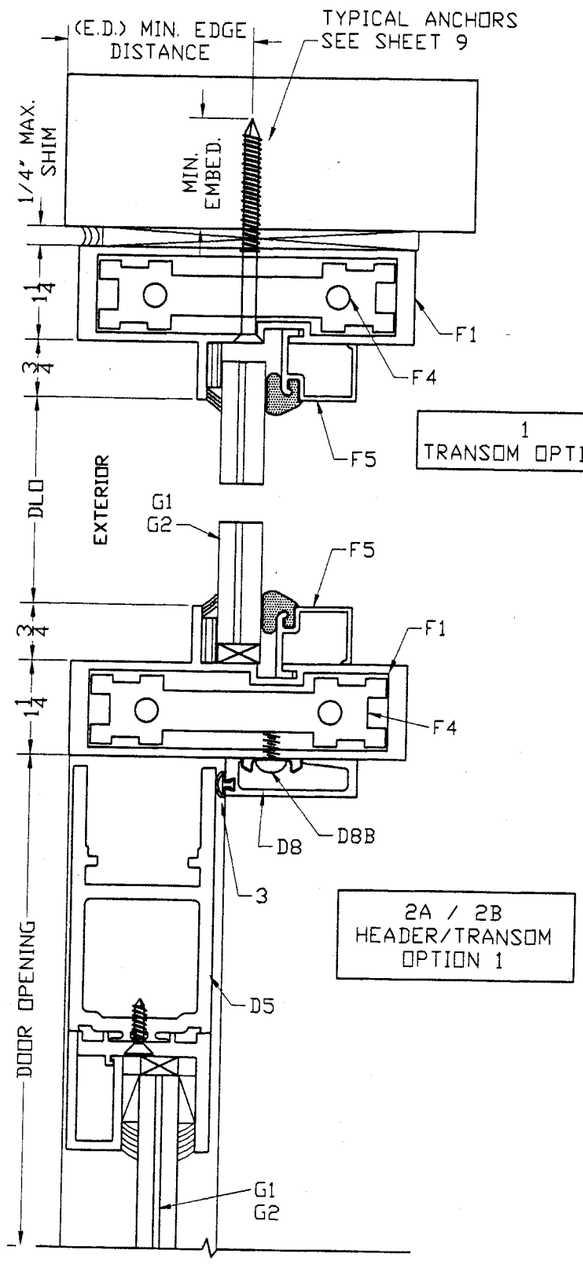

1
TRANSOM OPTIONS

2A / 2B
HEADER/TRANSOM
OPTION 1

TYPICAL ANCHORS
A- 1/4" TAPCONS W/ 1 1/4" EMBED. INTO MASONRY/CONCRETE
B- #14 SS WOOD SCREWS OR 1/4" TAPCONS W/ 1 1/2" EMBED. INTO WOOD (SG=.55)
C- 1/4-14 SELF DRILLING SCREWS INTO METAL STRUCTURES (1/8" MIN. 6063-T5 ALUMINUM OR ASTM A36 STEEL)

E.D.= 1" FOR WOOD
E.D.= 3" FOR CONCRETE
E.D.= 3/4" FOR METAL

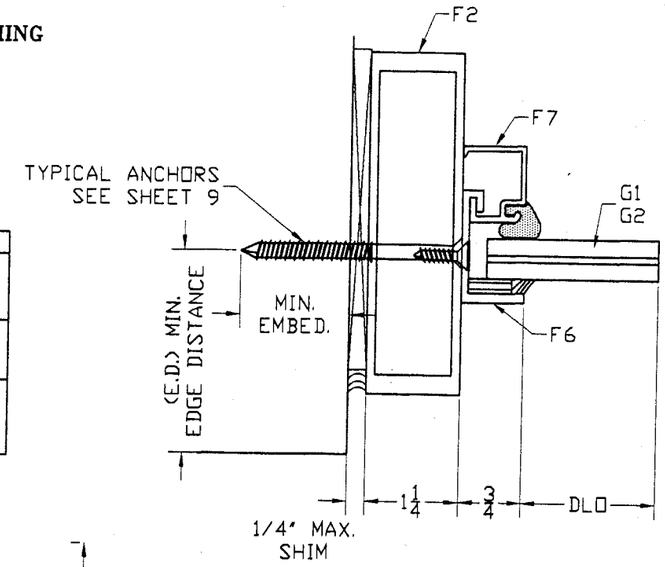

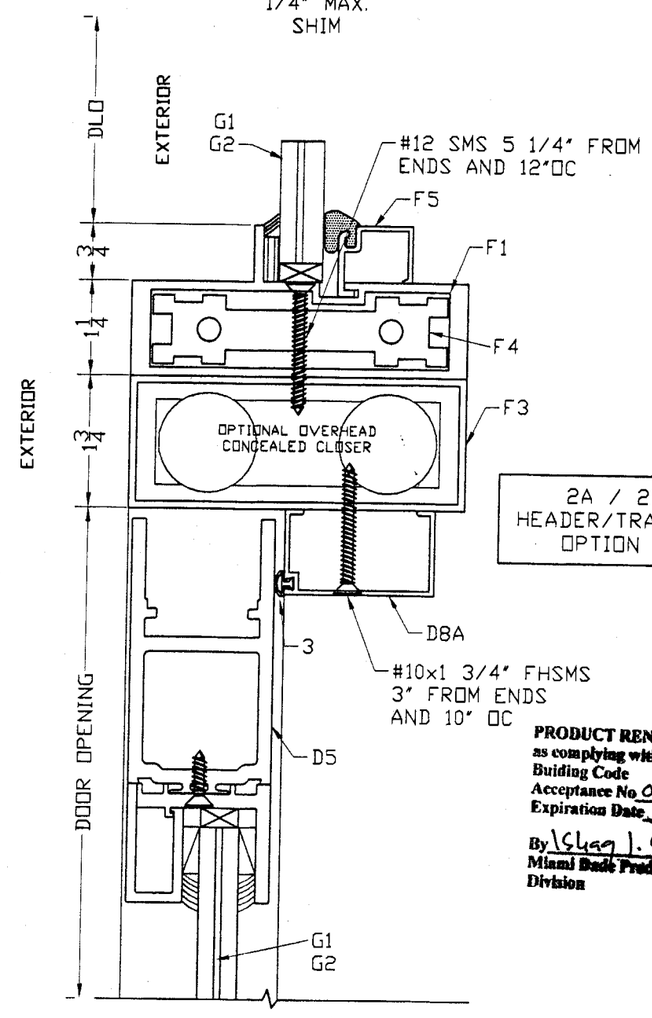

2A / 2B
HEADER/TRANSOM
OPTION 2

PRODUCT RENEWED
as complying with the Florida Building Code
Acceptance No. 06-1017.06
Expiration Date JAN 03, 2012
By Shay J. Chandra
Miami Dade Product Control Division

NOTES:
1- D8 DOOR STOP ANCHORED TO STEEL CLIPS D8B SPACED 6" FROM ENDS AND 12" OC.
2- STEEL CLIPS D8B ARE ANCHORED TO HEADER WITH ONE #10-24X1/2 PHMS

MANUFACTURER:
Arch Aluminum & Glass Co. Inc.
10200 NW 67TH STREET
TAMARAC - FL - 33321
TEL: (800) 432-8132
FAX: (954) 724-9293

PRODUCT:
Aluminum Impact Door Line
MAGNUM SERIES
OUTSWING DOORS

Engineering:
EngCo Inc.
CA 8116
6971 W. Sunrise Blvd. 104
Plantation, Fl. 33313
Tel.: (954) 585-0304
Fax: (954) 585-0305

SEP 07 2006
Pedro De Figueiredo, PE
PE 52609

DRAFTING:
PK DRAFTING & MORE

Date: 01/01/06
Scale: NA
Design by: PPMF

PRODUCT CONTROL DIVISION:
PRODUCT REVISED
as complying with the Florida Building Code
Acceptance No. 06-0705.05
Expiration Date JAN. 3, 2007
By Manuel Perez
Miami Dade Product Control Division

Drawing Number
06-002R1

DOOR VERTICAL SECTIONS DETAILS

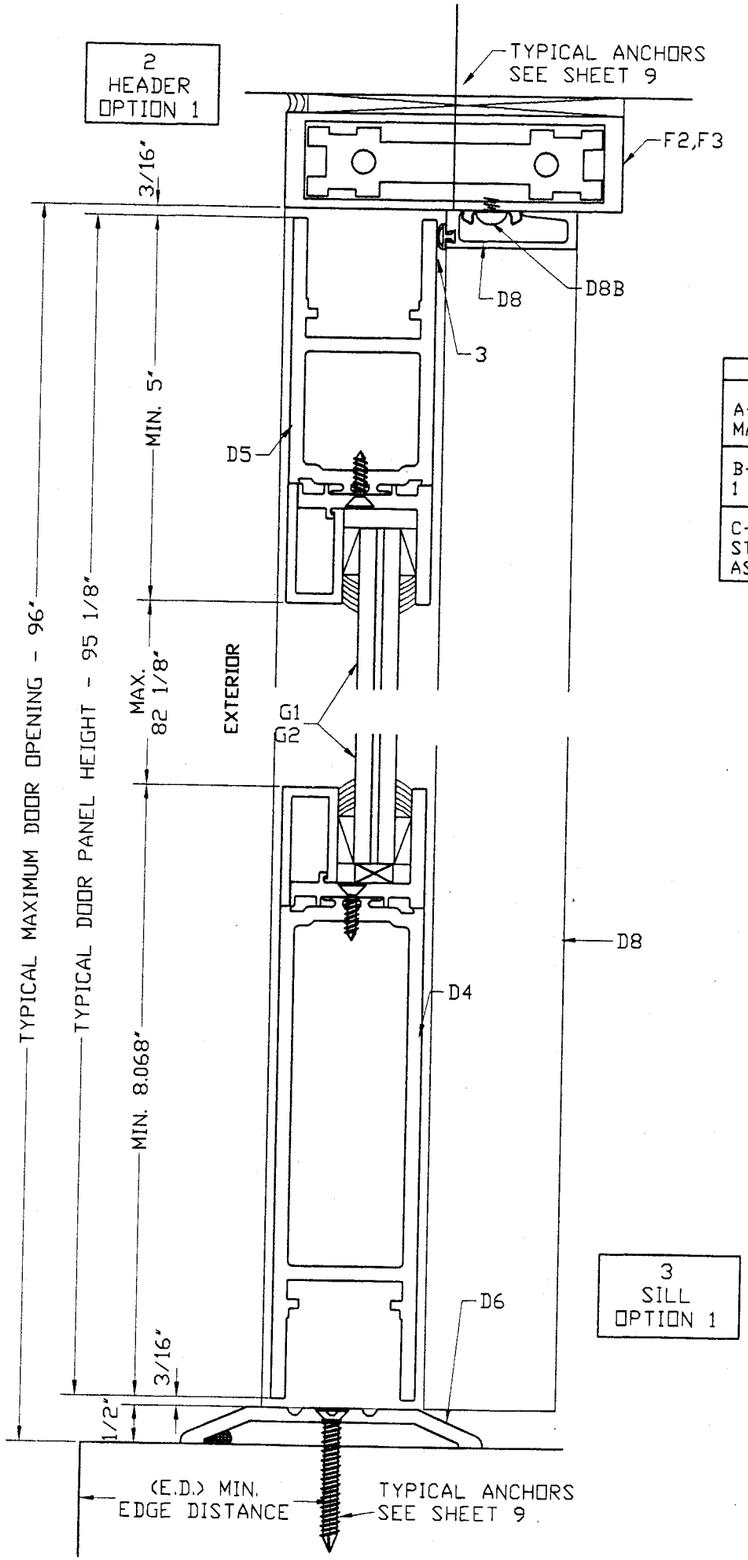

TYPICAL ANCHORS
A- 1/4" TAPCONS W/ 1 1/4" EMBED. INTO MASONRY/CONCRETE
B- #14 SS WOOD SCREWS OR 1/4". TAPCONS W/ 1 1/2" EMBED. INTO WOOD (SG=.55)
C- 1/4-14 SELF DRILLING SCREWS INTO METAL STRUCTURES (1/8" MIN. 6063-T5 ALUMINUM OR ASTM A36 STEEL)

E.D.= 1" FOR WOOD
E.D.= 3" FOR CONCRETE
E.D.= 3/4" FOR METAL

3
SILL
OPTION 1

APPLICABLE FOR
CASE 2 AS
PER SHEET 2

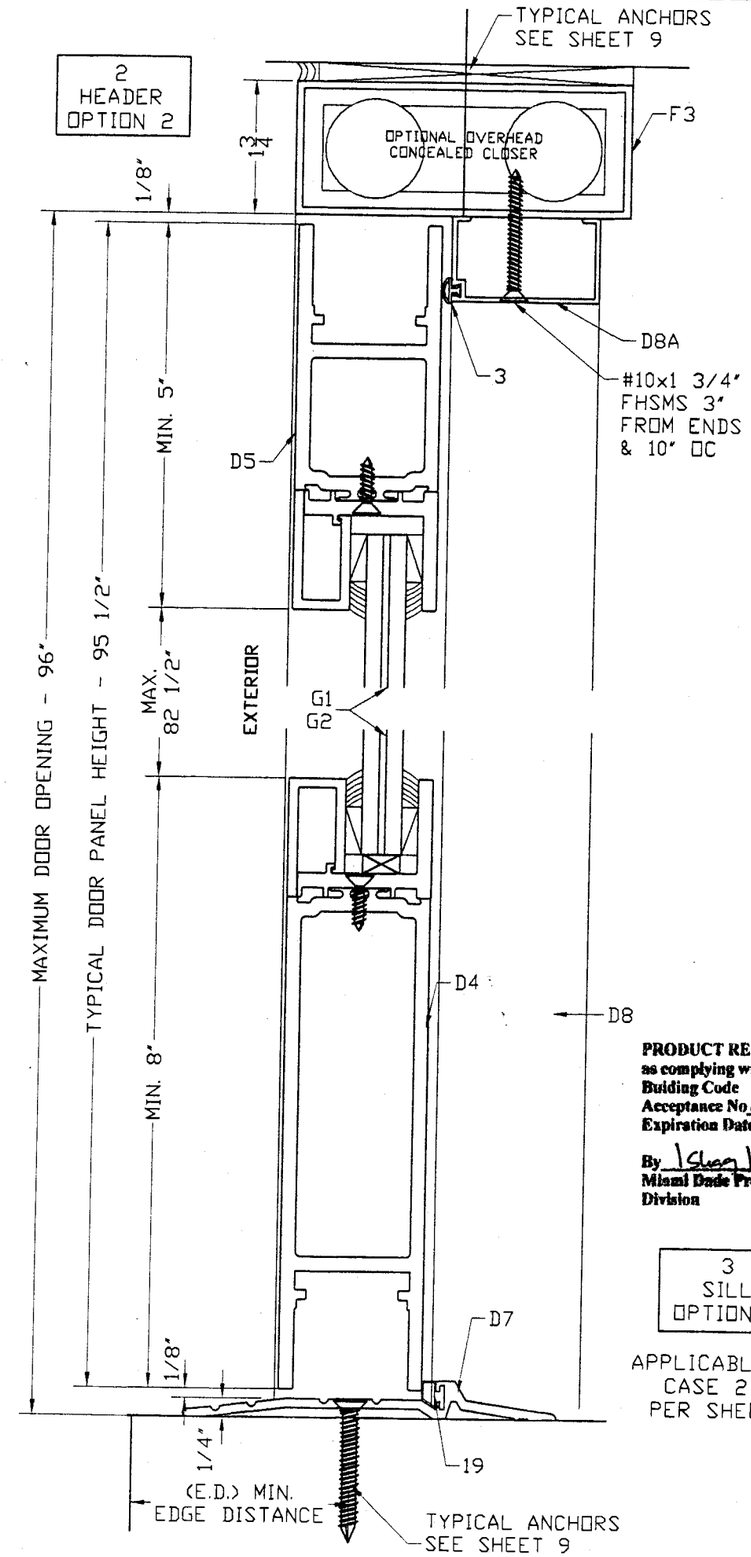

PRODUCT RENEWED
as complying with the Florida Building Code
Acceptance No. 06-1017.06
Expiration Date JAN 03, 2017
By [signature]
Miami Dade Product Control Division

3
SILL
OPTION 2

APPLICABLE FOR
CASE 2 AS
PER SHEET 2

MANUFACTURER:
Arch Aluminum & Glass Co. Inc.
10200 NW 67TH STREET
TAMARAC - FL - 33321
TEL: (800) 432-8132
FAX: (954) 724-9293

PRODUCT:
Aluminum Impact Door Line
MAGNUM SERIES
OUTSWING DOORS

Engineering:
EngCo Inc.
CA 8116
6971 W. Sunrise Blvd. 104
Plantation, Fl. 33313
Tel.: (954) 585-0304
Fax: (954) 585-0305

SEP 07 2006

Pedro Da Figueiredo, PE
PE 52609

DRAFTING:
PK DRAFTING & MORE

Date: 01/01/06
Scale: NA
Design by: PPMF

PRODUCT CONTROL DIVISION:

PRODUCT REVISED
as complying with the Florida Building Code
Acceptance No. 06-0705.05
Expiration Date JAN. 3, 2007
By [signature]
Miami Dade Product Control Division

Drawing Number
06-002R1

DOOR HORIZONTAL SECTIONS DETAILS

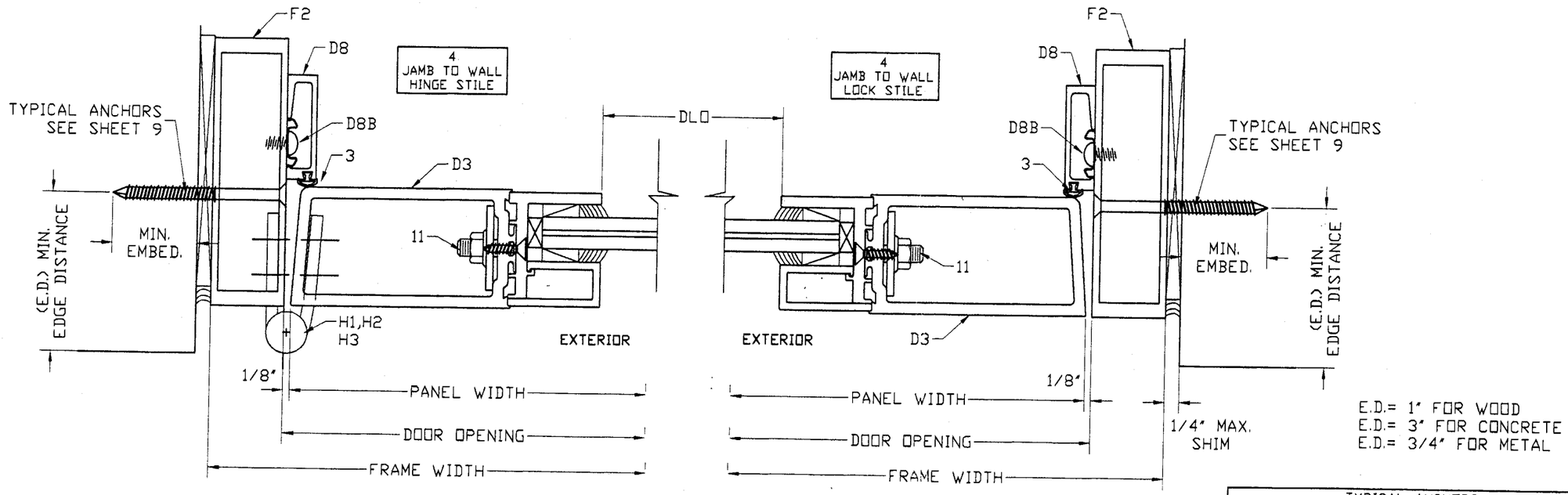

E.D.= 1" FOR WOOD
E.D.= 3" FOR CONCRETE
E.D.= 3/4" FOR METAL

TYPICAL ANCHORS
A- 1/4" TAPCONS W/ 1 1/4" EMBED. INTO MASONRY/CONCRETE
B- #14 SS WOOD SCREWS OR 1/4" TAPCONS W/ 1 1/2" EMBED. INTO WOOD (SG=.55)
C- 1/4-14 SELF DRILLING SCREWS INTO METAL STRUCTURES (1/8" MIN. 6063-T5 ALUMINUM OR ASTM A36 STEEL)

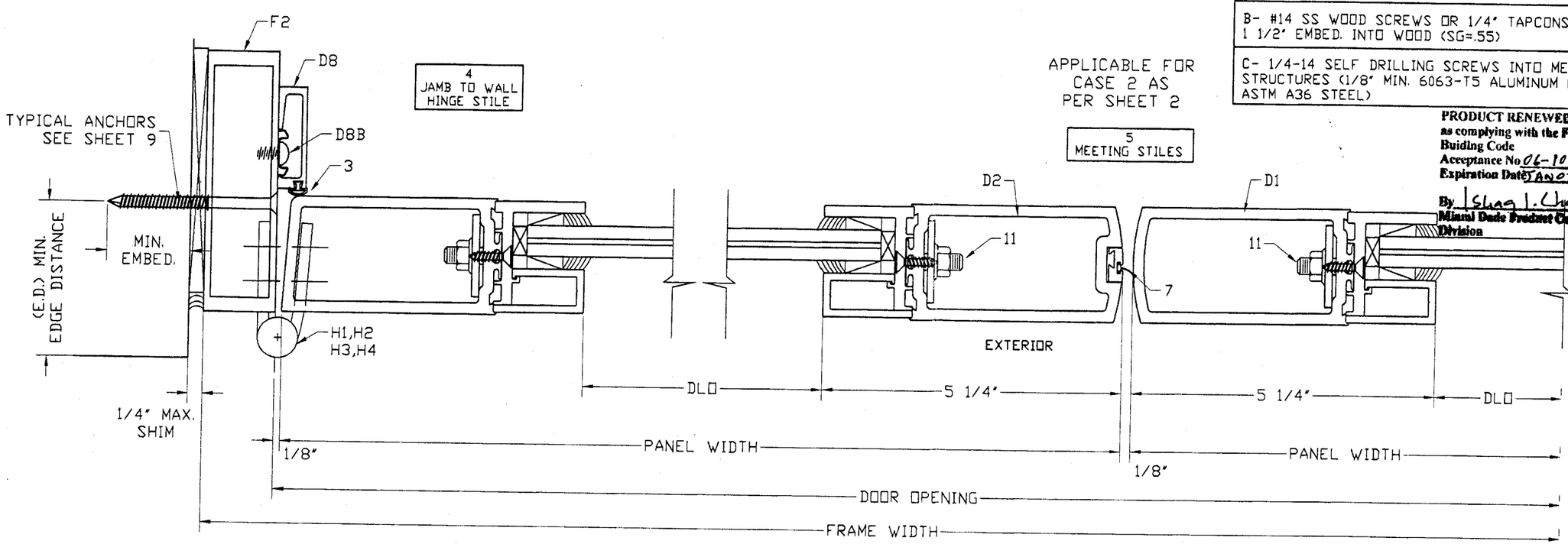

PRODUCT RENEWED
as complying with the Florida Buiding Code
Acceptance No 06-1017.06
Expiration Date JAN 03, 2012
By Shaq I. Chandi
Miami Dade Product Control Division

MANUFACTURER:
Arch Aluminum & Glass Co. Inc.
10200 NW 67TH STREET
TAMARAC - FL - 33321
TEL: (800) 432-8132
FAX: (954) 724-9293

PRODUCT:
Aluminum Impact Door Line
MAGNUM SERIES
OUTSWING DOORS

Engineering:
EngCo Inc.
CA 8116
6971 W. Sunrise Blvd. 104
Plantation, Fl. 33313
Tel.: (954) 585-0304
Fax: (954) 585-0305

SEP 07 2006
Pedro De Figueiredo, PE
PE 52609

DRAFTING:
PK DRAFTING & MORE

Date: 01/01/06
Scale: NA
Design by: PPMF

PRODUCT CONTROL DIVISION:
PRODUCT REVISED
as complying with the Florida Building Code
Acceptance No. 06-0705.05
Expiration Date JAN 3, 2007
By Manuel Serra
Miami Dade Product Control Division

Drawing Number
06-002R1

DOOR SECTIONS DETAILS WHERE WATER INFILTRATION IS NOT ACCEPTABLE SEE TABLE 3, CASE 1 ON SHEET 2
MAX. PRESSURE ± 100 PSF

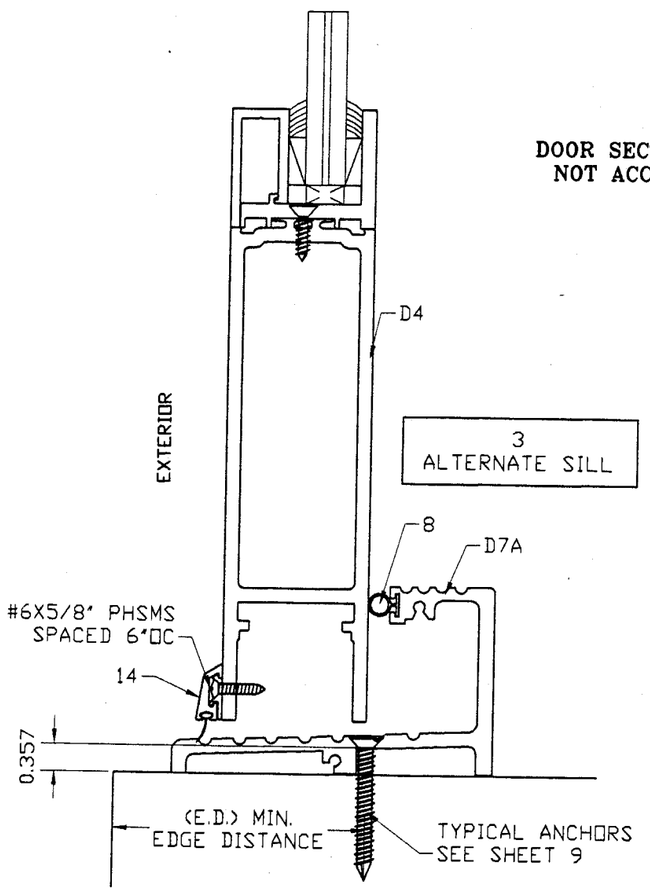

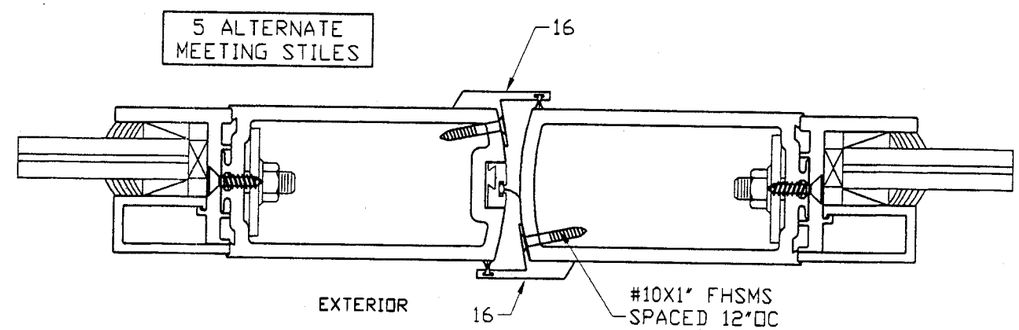

TYPICAL ANCHORS
A- 1/4" TAPCONS W/ 1 1/4" EMBED. INTO MASONRY/CONCRETE
B- #14 SS WOOD SCREWS OR 1/4" TAPCONS W/ 1 1/2" EMBED. INTO WOOD (SG=.55)
C- 1/4-14 SELF DRILLING SCREWS INTO METAL STRUCTURES (1/8" MIN. 6063-T5 ALUMINUM OR ASTM A36 STEEL)

E.D.= 1" FOR WOOD
E.D.= 3" FOR CONCRETE
E.D.= 3/4" FOR METAL

PRODUCT RENEWED
as complying with the Florida Buiding Code
Acceptance No 06-1017.06
Expiration Date JAN 03, 2012
By Ishay J. Llanes
Miami Dade Product Control Division

MANUFACTURER:
Arch Aluminum & Glass Co. Inc.
10200 NW 67TH STREET
TAMARAC - FL - 33321
TEL: (800) 432-8132
FAX: (954) 724-9293

PRODUCT:
Aluminum Impact Door Line
MAGNUM SERIES
OUTSWING DOORS

Engineering:
EngCo Inc.
CA 8116
6971 W. Sunrise Blvd. 104
Plantation, Fl. 33313
Tel.: (954) 585-0304
Fax: (954) 585-0305

SEP 07 2006
Pedro De Figueiredo, PE
PE 52609

DRAFTING:
PK DRAFTING & MORE

Date: 01/01/06
Scale: NA
Design by: PPMF

PRODUCT CONTROL DIVISION:
PRODUCT REVISED
as complying with the Florida Building Code
Acceptance No 06-0705.05
Expiration Date JAN. 3, 2007
By Manuel Sera
Miami Dade Product Control Division

Drawing Number
06-002R1

Sheet
8 of 9

ANCHORAGE LAY-OUT

TYPICAL ANCHORS
A- 1/4" TAPCONS W/ 1 1/4" EMBED. INTO MASONRY/CONCRETE
B- #14 SS WOOD SCREWS OR 1/4" TAPCONS W/ 1 1/2" EMBED. INTO WOOD (SG=.55)
C- 1/4-14 SELF DRILLING SCREWS INTO METAL STRUCTURES (1/8" MIN. 6063-T5 ALUMINUM OR ASTM A36 STEEL)

ANCHOR NOTES:
1- EDGE DISTANCE (ED.): 1" FOR WOOD, 3" FOR MASONRY & 3/4" FOR METAL
2- QUANTITY AND SPACING OF ANCHORS TYPE "B" WILL APPLY FOR INSTALLATION WITH BUCK.
3- WOOD BUCKS ARE NOT BY ARCH ALUMINUM, THEY ARE TO BE PROVIDED AND DESIGNED BY OTHERS
4- STRUCTURAL BUCKS ARE TO BE MADE OF MINIMUM 2X5 PT. WOOD.
5- NON STRUCTURAL BUCKS MADE OF LESS THAN 2X MUST BE CONTINUOUS AND FRAMING IS TO BE ATTACHED TO THE MAIN STRUCTURE.

XX/0 - PAIR WITH TRANSOM

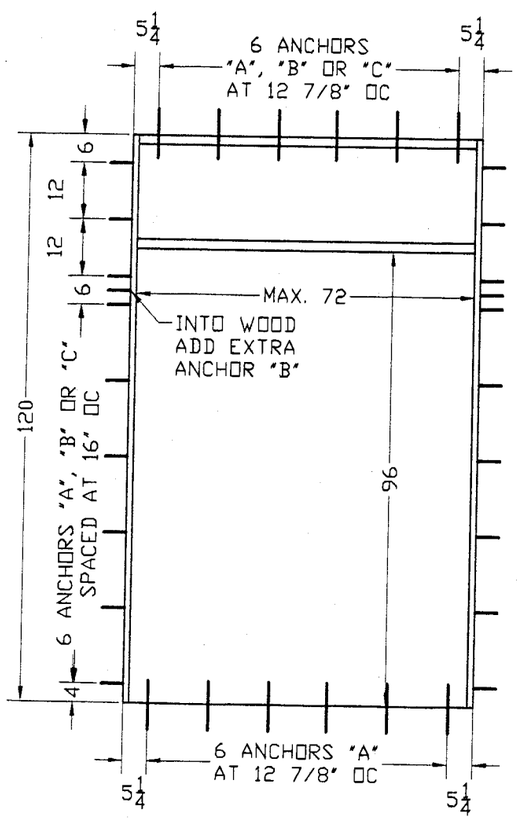

X/0 - SINGLE WITH TRANSOM

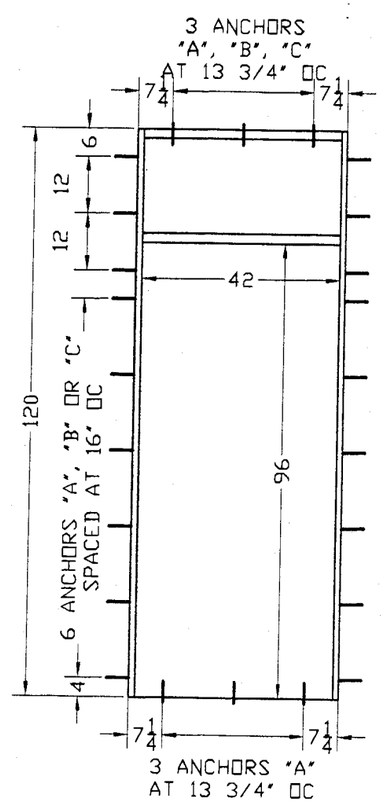

XX PAIR

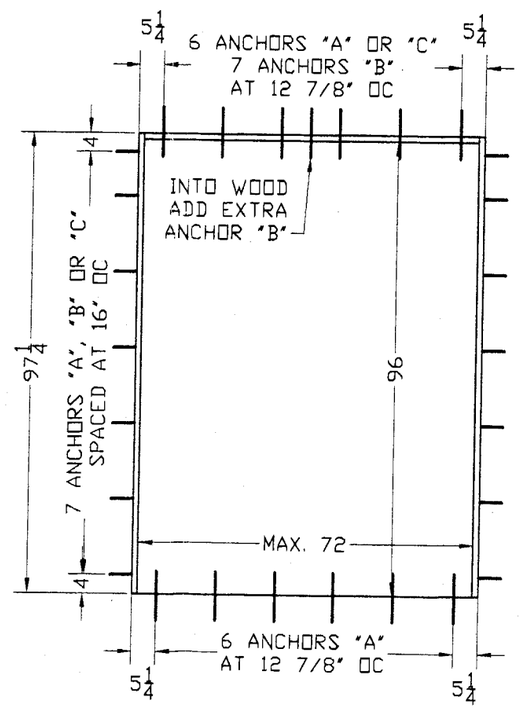

X SINGLE

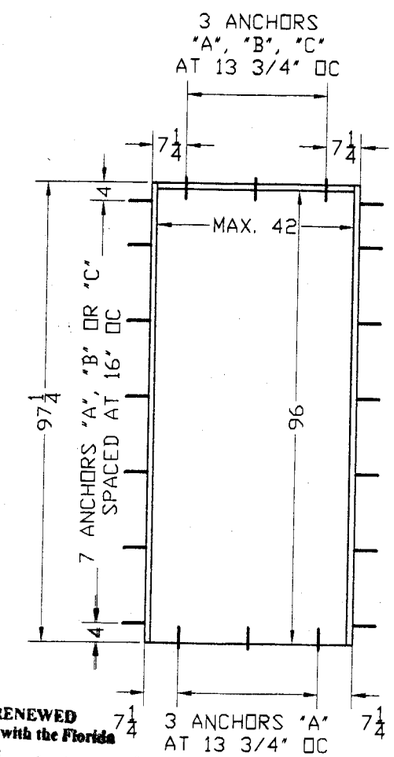

PRODUCT RENEWED
as complying with the Florida Buiding Code
Acceptance No. 06-1017.06
Expiration Date JAN03,2012
By Ishan I. Chanda
Miami Dade Product Control Division

MANUFACTURER:
Arch Aluminum & Glass Co. Inc.
10200 NW 67TH STREET
TAMARAC - FL - 33321
TEL: (800) 432-8132
FAX: (954) 724-9293

PRODUCT:
Aluminum Impact Door Line
MAGNUM SERIES
OUTSWING DOORS

Engineering:
EngCo Inc.
CA 8116
6971 W. Sunrise Blvd. 104
Plantation, Fl. 33313
Tel.: (954) 585-0304
Fax: (954) 585-0305

SEP 07 2006

Pedro De Figueiredo, PE
PE 52609

DRAFTING:
PK DRAFTING & MORE

Date: 01/01/06
Scale: NA
Design by: PPMF

PRODUCT CONTROL DIVISION:
PRODUCT REVISED
as complying with the Florida Building Code
Acceptance No. 06-0705.05
Expiration Date JAN. 3,2009
By Manuel Sera
Miami-Dade Product Control Division

Drawing Number
06-002R1