MIAMI-DADE COUNTY, FLORIDA
METRO-DADE FLAGLER BUILDING
140 WEST FLAGLER STREET, SUITE 1603
MIAMI, FLORIDA 33130-1563
(305) 375-2901 FAX (305) 375-2908
www.buildingcodeonline.com

BUILDING CODE COMPLIANCE OFFICE (BCCO)
PRODUCT CONTROL DIVISION

NOTICE OF ACCEPTANCE (NOA)

Eurotech Industries, Inc.
250 NE 32 Street
Fort Lauderdale, FL 33334

SCOPE:

This NOA is being issued under the applicable rules and regulations governing the use of construction materials. The documentation submitted has been reviewed by Miami-Dade County Product Control Division and accepted by the Board of Rules and Appeals (BORA) to be used in Miami Dade County and other areas where allowed by the Authority Having Jurisdiction (AHJ).

This NOA shall not be valid after the expiration date stated below. The Miami-Dade County Product Control Division (In Miami Dade County) and/or the AHJ (in areas other than Miami Dade County) reserve the right to have this product or material tested for quality assurance purposes. If this product or material fails to perform in the accepted manner, the manufacturer will incur the expense of such testing and the AHJ may immediately revoke, modify, or suspend the use of such product or material within their jurisdiction. BORA reserves the right to revoke this acceptance, if it is determined by Miami-Dade County Product Control Division that this product or material fails to meet the requirements of the applicable building code.

This product is approved as described herein, and has been designed to comply with the Florida Building Code, including the High Velocity Hurricane Zone.

DESCRIPTION: Aluminum Outswing Entrance Door-LMI

APPROVAL DOCUMENT: Drawing **No. W04-01,** titled "Aluminum Outswing Entrance Door", sheets 1 through 5 of 5, dated 01/15/04, prepared by AL-Farooq Corporation, signed and sealed by Humayoun Farooq, P.E., bearing the Miami-Dade County Product Control Revision stamp with the Notice of Acceptance number and expiration date by the Miami-Dade County Product Control Division.

MISSILE IMPACT RATING: Large and Small Missile Impact

LABELING: Each unit shall bear a permanent label with the manufacturer's name or logo, city, state and following statement: "Miami-Dade County Product Control Approved", unless otherwise noted herein.

RENEWAL of this NOA shall be considered after a renewal application has been filed and there has been no change in the applicable building code negatively affecting the performance of this product.

TERMINATION of this NOA will occur after the expiration date or if there has been a revision or change in the materials, use, and/or manufacture of the product or process. Misuse of this NOA as an endorsement of any product, for sales, advertising or any other purposes shall automatically terminate this NOA. Failure to comply with any section of this NOA shall be cause for termination and removal of NOA.

ADVERTISEMENT: The NOA number preceded by the words Miami-Dade County, Florida, and followed by the expiration date may be displayed in advertising literature. If any portion of the NOA is displayed, then it shall be done in its entirety.

INSPECTION: A copy of this entire NOA shall be provided to the user by the manufacturer or its distributors and shall be available for inspection at the job site at the request of the Building Official.

This NOA revises NOA No. **04-0428.03** consists of this page 1 and evidence pages E-1 and E-2, as well as approval document mentioned above.

The submitted documentation was reviewed by **Jaime D. Gascon, P.E.**

PRODUCT CONTROL ACCEPTED

J. Gascon
2/1/07

Eurotech Industries, Inc.

NOTICE OF ACCEPTANCE: EVIDENCE SUBMITTED

A. DRAWINGS

1. Manufacturer's die drawings and sections.
2. Drawing **No. W04-01,** titled "Aluminum Outswing Entrance Door", sheets 1 through 5 of 5, dated 01/15/04, prepared by AL-Farooq Corporation, signed and sealed by Humayoun Farooq, P.E.

B. TESTS (Submitted under NOA No. 04-0428.03)

1. Test reports on 1) Air Infiltration Test, per FBC, TAS 202-94
2) Uniform Static Air Pressure Test, Loading per FBC, TAS 202-94
3) Water Resistance Test per FBC, TAS 202-94
4) Forced Entry Test, per FBC 2411 3.2.1 and TAS 202-94
along with installation diagram of aluminum outswing door, prepared by Hurricane Test Laboratory, Inc., Test Report No. **HTL- 03-1331,** dated 01/15/04, signed and sealed by Rafael E. Droz-Seda, P.E.

2. Test reports on 1) Air Infiltration Test, per FBC, TAS 202-94
2) Uniform Static Air Pressure Test, Loading per FBC, TAS 202-94
3) Water Resistance Test per FBC, TAS 202-94
4) Forced Entry Test, per FBC 2411 3.2.1 and TAS 202-94
along with installation diagram of aluminum outswing door, prepared by Hurricane Test Laboratory, Inc., Test Report No. **HTL- 03-1365,** dated 01/15/04, signed and sealed by Rafael E. Droz-Seda, P.E.

3. Test reports on 1) Large Missile Impact Test per FBC, TAS 201-94
2) Cyclic Wind Pressure Loading per FBC, TAS 203-94
along with installation diagram of an aluminum outswing door, prepared by Hurricane Test Laboratory, Inc., Test Report No.**HTL-03-1882**, dated 01/15/04, signed and sealed by Rafael E. Droz-Seda, P.E.

4. Test reports on 1) Large Missile Impact Test per FBC, TAS 201-94
2) Cyclic Wind Pressure Loading per FBC, TAS 203-94
along with installation diagram of an aluminum outswing door, prepared by Hurricane Test Laboratory, Inc., Test Report No.**HTL-03-1889**, dated 02/03/04, signed and sealed by Rafael E. Droz-Seda, P.E.

5. Test reports on 1) Large Missile Impact Test per FBC, TAS 201-94
2) Cyclic Wind Pressure Loading per FBC, TAS 203-94
along with installation diagram of an aluminum outswing door, prepared by Hurricane Test Laboratory, Inc., Test Report No.**HTL-03-1890**, dated 02/09/04, signed and sealed by Rafael E. Droz-Seda, P.E.

6. Tensile Test prepared by Hurricane Engineering & Testing, Test No. HETI-04-T100, dated 01/29/04, tested per ASTM E8-01e1, signed and sealed by Rafael E. Droz-Seda, P.E.

Jaime D. Gascon, P.E.
Chief, Product Control Division
NOA No 06-1019.06
Expiration Date: June 10, 2009
Approval Date: February 22, 2007

NOTICE OF ACCEPTANCE: EVIDENCE SUBMITTED

C. CALCULATIONS

1. Revised Anchor Calculations and structural analysis, complying with FBC-2004, prepared by Simonton Windows, dated 04/26/06, signed and sealed by Humayoun Farooq, P.E.
   Complies with ASTM E1300-98

D. QUALITY ASSURANCE

1. Miami Dade Building Code Compliance Office (BCCO).

E. MATERIAL CERTIFICATIONS

1. Notice of Acceptance No. **00-1204.01** issued to "E.I. DuPont DeNemours" for " Dupont Sentry Plus" dated 01/14/99 and expiring on 01/14/07.

F. STATEMENTS

1. Statement letter of compliance, dated April 28, 2006, signed and sealed by Humayoun Farooq, P.E.
2. Statement letter of no financial interest issued by AL Farooq Corporation, dated May 02,2006, signed and sealed by Humayoun Farooq, P.E.

G. OTHER

2. Notice of Acceptance No. 04-0428.03, issued to "Eurotech Industries, Inc." for "Aluminum Outswing Entrance Door" dated 06/10/04 and expiring on 06/10/09.

Jaime D. Gascon, P.E.
Chief, Product Control Division
NOA No 06-1019.06
Expiration Date: June 10, 2009
Approval Date: February 22, 2007

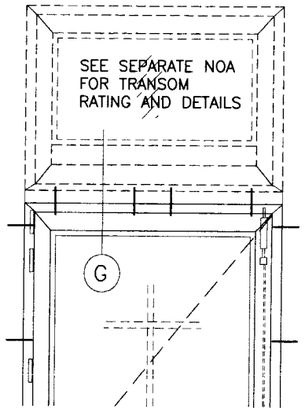

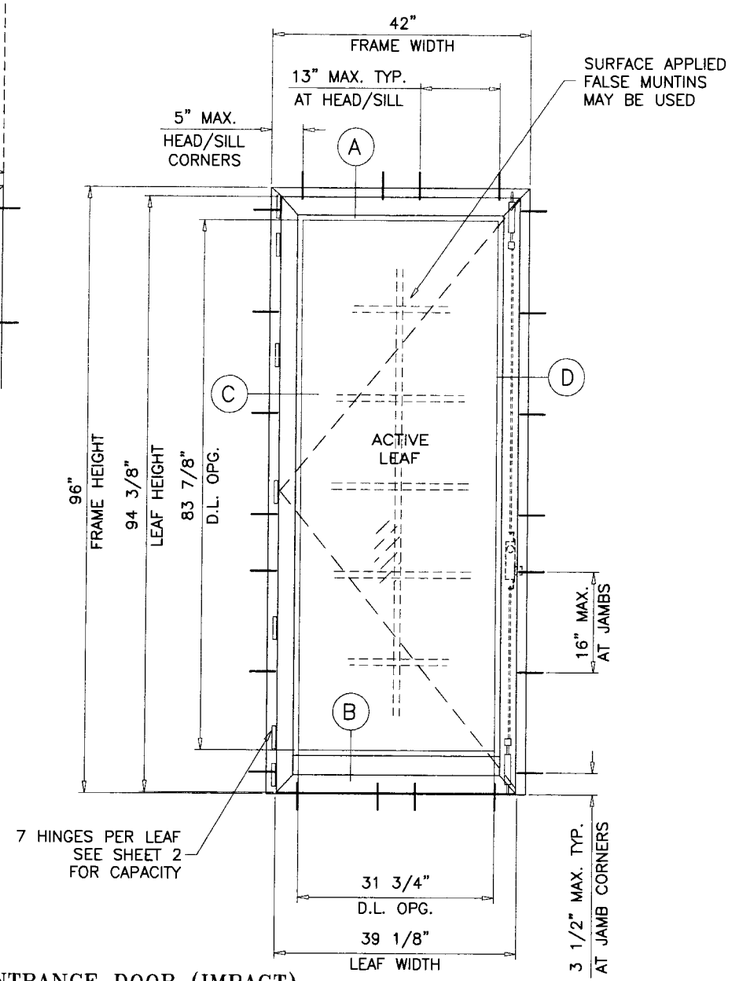

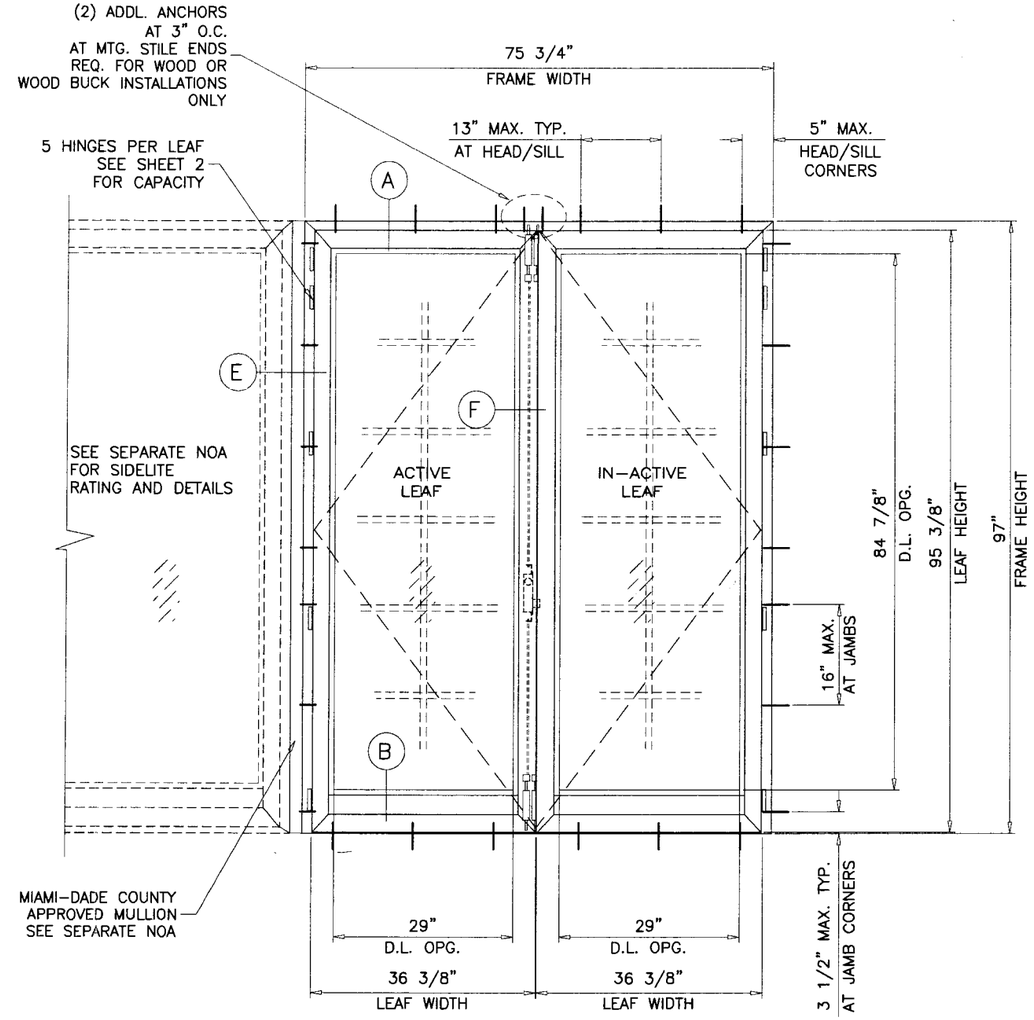

TYPICAL ELEVATIONS

ALUMINUM OUTSWING ENTRANCE DOOR (IMPACT)

THIS PRODUCT IS RATED FOR LARGE MISSILE IMPACT.
SHUTTERS ARE NOT REQUIRED.

APPROVAL APPLIES TO SINGLE (X) AND DOUBLE (XX) LEAF DOORS.
ALSO DOORS WITH FIXED LITES AT ONE OR BOTH SIDES OF DOORS OR FIXED LITES (TRANSOMS) ABOVE DOORS WITH APPROVED CLIPPED MULLION IN BETWEEN.

THIS PRODUCT HAS BEEN DESIGNED AND TESTED TO COMPLY WITH THE REQUIREMENTS OF THE FLORIDA BUILDING CODE 2004 EDITION (REV. 2006) INCLUDING HIGH VELOCITY HURRICANE ZONE (HVHZ).

WOOD BUCKS BY OTHERS, MUST BE ANCHORED PROPERLY TO TRANSFER LOADS TO THE STRUCTURE.

ANCHORS SHALL BE AS LISTED, SPACED AS SHOWN ON DETAILS, ANCHORS EMBEDMENT TO BASE MATERIAL SHALL BE BEYOND WALL DRESSING OR STUCCO.

ANCHORING OR LOADING CONDITIONS NOT SHOWN IN THESE DETAILS ARE NOT PART OF THIS APPROVAL.

A LOAD DURATION INCREASE IN ALLOWABLE STRESS IS USED IN DESIGN OF ANCHORS INTO WOOD ONLY.

MATERIALS INCLUDING BUT NOT LIMITED TO STEEL/METAL SCREWS, THAT COME INTO CONTACT WITH OTHER DISSIMILAR MATERIALS SHALL MEET THE REQUIREMENTS OF 2004 FLORIDA BLDG. CODE SECTION 2003.8.4 (SUPPLEMENT 2005).

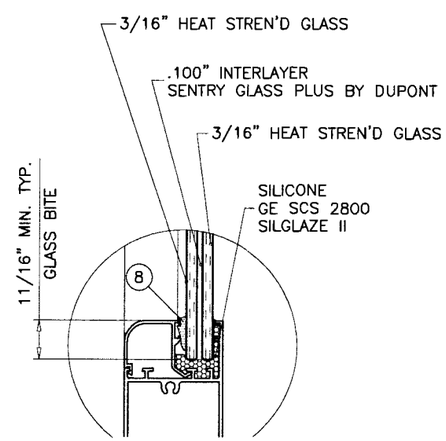

GLAZING DETAIL

PRODUCT REVISED
as complying with the Florida
Building Code
Acceptance No. 06-1019.06
Registration Date 06/10/09
By
Miami-Dade Product Control
Division

Engr: DR. HUMAYOUN FAROOQ
STRUCTURES
FLA. PE # 16557
C.A.N. 3538
10 OCT 05

AL-FAROOQ CORPORATION
ENGINEERS & PRODUCT DEVELOPMENT
1235 S.W. 87 AVE
MIAMI, FLORIDA 33174
TEL. (305) 264-8100 FAX. (305) 262-6978
COMP-ANL\W04-01EWD

ALUM OUTSWING ENTRANCE DOOR (IMPACT)

EUROTECH WINDOWS & DOORS
250 N.E. 32nd STREET
FT. LAUDERDALE, FL. 33334
TEL. (954) 630-9967 TEL. (954) 630-0217

revisions:

no	date	by	description
A	04.28.06		UPDATED FOR 2004 FBC

date: 01-15-04
scale: 1/2"=1'-0"
dr. by: HAMID
chk. by:

drawing no.
W04-01

sheet 1 of 5

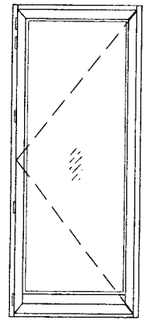

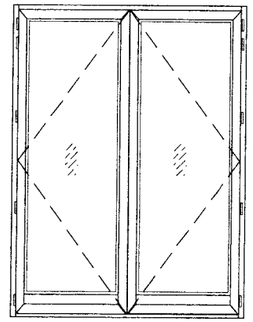

DESIGN LOAD CAPACITY – PSF SINGLE (X) DOORS					
DOOR SIZE		HINGE OPTION 1 LOCK OPTION 1		HINGE OPTION 2 LOCK OPTION 2	
WIDTH	HEIGHT	EXT. (+)	INT. (–)	EXT. (+)	INT. (–)
2/6	6/8	75.0	75.0	75.0	110.0
3/0		75.0	75.0	75.0	110.0
3/6		–	–	75.0	110.0
2/6	7/0	75.0	75.0	75.0	110.0
3/0		75.0	75.0	75.0	110.0
3/6		–	–	75.0	110.0
2/6	8/0	75.0	75.0	75.0	110.0
3/0		75.0	75.0	75.0	110.0
3/6		–	–	75.0	110.0

DOORS APPROVED FOR INSTALLATIONS WHERE WATER INFILTRATION RESISTANCE IS REQUIRED.

DESIGN LOAD CAPACITY – PSF DOUBLE (XX) DOORS			
DOOR SIZE		HINGE OPTION 1 LOCK OPTION 3	
WIDTH	HEIGHT	EXT. (+)	INT. (–)
5/0	6/8	75.0	75.0
6/0		75.0	75.0
5/0	7/0	75.0	75.0
6/0		75.0	75.0
5/0	8/0	75.0	75.0
6/0		75.0	75.0

LOADS SHOWN ABOVE ARE FOR INSTALLATIONS WHERE WATER INFILTRATION RESISTANCE IS NOT REQUIRED.

LIMIT EXTERIOR(+) LOADS TO 48 PSF FOR INSTALLATIONS WHERE WATER INFILTRATION RESISTANCE IS REQUIRED.

ITEM #	PART #	REQD.	DESCRIPTION	MATERIAL	MANF./SUPPLIER/REMARKS
1	ER006	AS REQD.	DOOR FRAME	6063–T6	–
2	ER012	AS REQD.	DOOR LEAF	6063–T6	–
3	VZ1566	1/ LEAF	DOOR BASE BOARD	6063–T6	–
4	VZ–1483	1/ DOOR	FRAME SILL	6063–T6	–
5	–	1/ DOOR	SILL BASE	6063–T6	–
6	VZ–1481	AS REQD.	ASTRAGAL STILE	6063–T6	–
7	VZ–1535	4/ LEAF	GLAZING BEAD	6063–T6	–
8	2801	AS REQD.	GLAZING GASKET	VINYL	–
9	–	–	–	–	–
10	1001/50	1/ CORNER	CORNER KEY	ALUMINUM	MONTICELLO
11	00600X	4/ LEAF	HINGES	ALUMINUM	GIESSE
12	#10 X 3/8"	4/ HINGE	HINGE INSTALLATION SCREWS	–	PH MACHINE SCREWS
13	–	AS REQD.	BULB W'STRIPPING	–	–
14	–	–	–	–	–
15	#12 X 1–1/4	–	FRAME ASSEMBLY SCREWS	–	SMS
16	–	AS REQD.	STRIKE PLATE REINFORCING	STEEL	1–1/4" X 1/4" X 16–1/4" LONG

LOCK OPTIONS SINGLE DOORS:

OPTION #1:

MANUALLY OPERATED CONCEALED FLUSH BOLTS AT TOP AND BOTTOM OF ACTIVE LEAF PART #02181 ATTACHED WITH (4) #8 X 1–1/2" SMS.

3 POINT LOCK SYSTEM AT ACTIVE LOCK STILE 36" FROM BOTTOM, KEY OPERATED ON EXTERIOR AND THUMB TURN ON INTERIOR.

OPTION #2:

MANUALLY OPERATED CONCEALED FLUSH BOLTS AT TOP AND BOTTOM OF ACTIVE LEAF PART #02181 ATTACHED WITH (4) #8 X 1–1/2" SMS.

3 POINT LOCK SYSTEM AT ACTIVE LOCK STILE 36" FROM BOTTOM, KEY OPERATED ON EXTERIOR AND THUMB TURN ON INTERIOR.

STRIKE PLATE REINFORCED WITH STEEL BAR 1–1/4" X 1/4" X 16–1/4" LONG ATTACHED WITH (2) #8 X 3/4" SMS

LOCK OPTIONS DOUBLE DOORS:

OPTION #3:

ACTIVE LEAF:

MANUALLY OPERATED CONCEALED FLUSH BOLTS AT TOP AND BOTTOM OF ACTIVE LEAF PART #02181 ATTACHED WITH (4) #8 X 1–1/2" SMS.

3 POINT LOCK SYSTEM AT ACTIVE LOCK STILE 36" FROM BOTTOM, KEY OPERATED ON EXTERIOR AND THUMB TURN ON INTERIOR.

INACTIVE LEAF

MANUALLY OPERATED CONCEALED FLUSH BOLTS AT TOP AND BOTTOM OF INACTIVE LEAF PART #02168 ATTACHED WITH (4) #8 X 1–1/2" SMS.

HINGE OPTIONS:

OPTION #1:

TWO–HANDED COMB HING
EXTRUDED ALUMINUM BRIDGE 2
BY 'GIESSE'
(5) PER LEAF
AT 6", 12", 35", 63–1/2" AND 92–1/2" FROM TOP OF DOOR

OPTION #2:

TWO–HANDED COMB HING
EXTRUDED ALUMINUM BRIDGE 2
BY 'GIESSE'
(7) PER LEAF
AT 3", 9" AND 26–3/8" FROM TOP AND BOTTOM, ONE AT MIDSPAN
(6) RETAINING PINS LOCATED ABOVE AND BELOW 2ND, 4TH AND 6TH HINGE FROM BOTTOM.

SEE CHARTS ABOVE FOR DESIGN LOAD CAPACITIES

NOTE: TOP AND BOTTOM FLUSH BOLTS MUST BE ENGAGED DURING PERIODS OF HURRICANE WARNING.

PRODUCT REVIEWED
as complying with the Florida Building Code
Acceptance No. 06-1019.04
Expiration Date 06/10/09
By
Miami-Dade Product Control Division

NOTE:
GLASS CAPACITIES ON THIS SHEET ARE BASED ON
A: ASTM E1300–98 (60 SEC. WIND)
B: ASTM E1300–02 (3 SEC. GUSTS) WITH REDUCTIONS FOR FLEXIBLE SUPPORTS TO COMPLY WITH SECTION 2403.2 OF FBC 2004 EDITION.

Engr: DR. HUMAYOUN FAROOQ
STRUCTURES
FLA. PE # 16557
C.A.N. 3538

OCT 05 2006

AL-FAROOQ CORPORATION
ENGINEERS & PRODUCT DEVELOPMENT
1235 S.W. 87 AVE
MIAMI, FLORIDA 33174
TEL. (305) 264-8100 FAX. (305) 262-6978
COMP–ANL\W04–01EWD

ALUM OUTSWING ENTRANCE DOOR (IMPACT)

EUROTECH WINDOWS & DOORS
250 N.E. 32nd STREET
FT. LAUDERDALE, FL. 33334
TEL. (954) 630–0217 TEL. (954) 630–9967

revisions:

no	date	by	description
A	04.28.06		UPDATED FOR 2004 FBC

date: 01–15–04
scale: 1/2"=1'–0"
dr. by: HAMID
chk. by:

drawing no.
W04–01

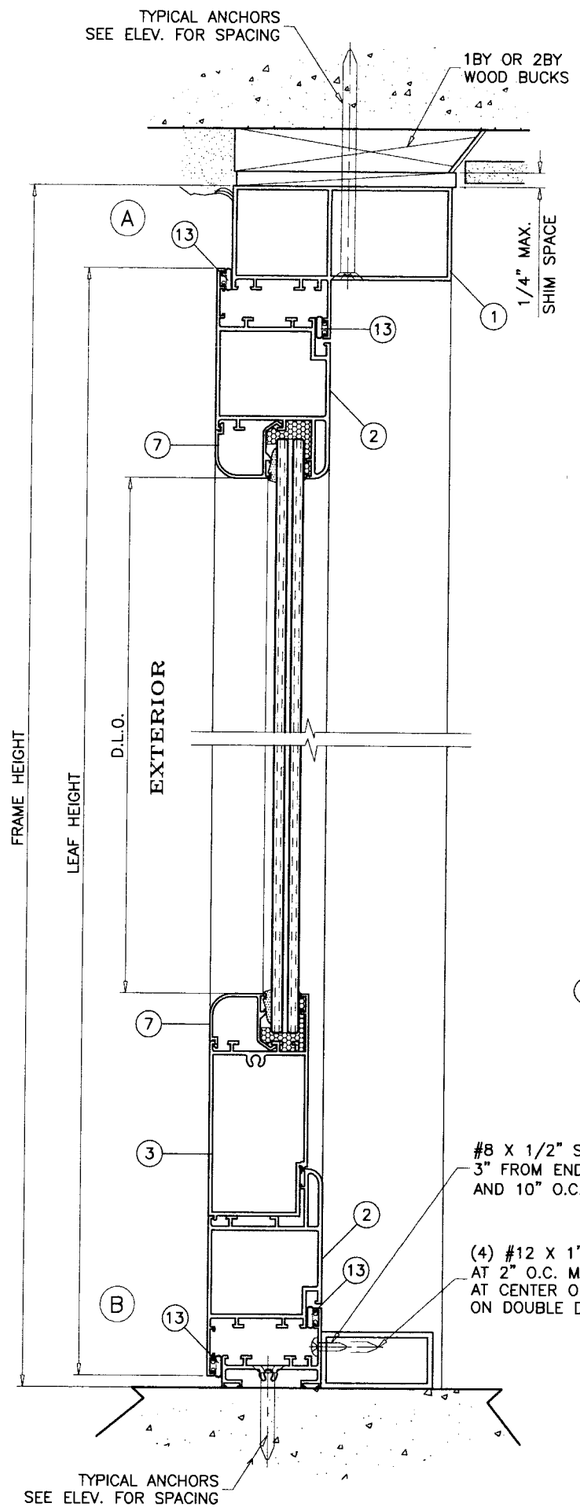

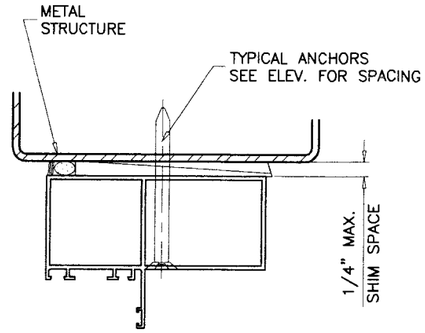

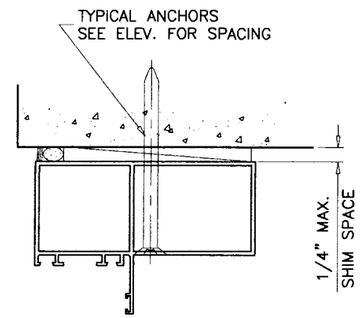

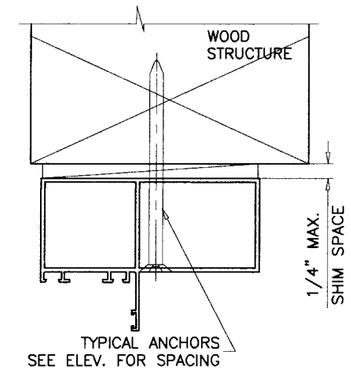

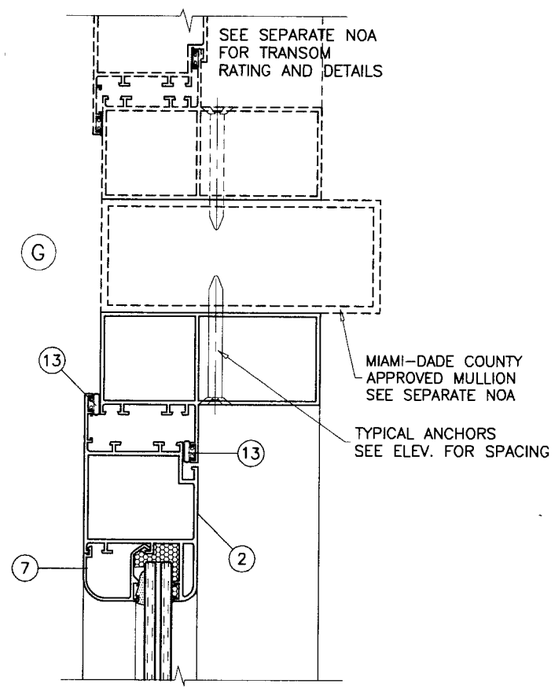

WOOD BUCKS NOT BY EUROTECH, MUST SUSTAIN LOADS IMPOSED BY GLAZING SYSTEM AND TRANSFER THEM TO THE BUILDING STRUCTURE.

TYPICAL ANCHORS: SEE ELEV. FOR SPACING

A) 1/4" DIA TAPCONS
INTO WOOD STRUCTURES
WITH 1-1/2" MIN. PENETRATION INTO WOOD

THRU WOOD BUCKS INTO MASONRY
WITH 1-1/4" MIN. EMBED INTO CONC. OR MASONRY

B) 1/4" DIA TAPCONS
DIRECTLY INTO MASONRY
WITH 1-1/4" MIN. EMBED INTO MASONRY

C) 1/4" TEKS OR SELF DRILLING SCREWS
INTO METAL STRUCTURES

STEEL : 12 GA. MIN. (Fy = 36 KSI MIN.)
ALUMINUM : 1/8" THK. MIN. (6063-T5 MIN.)
(STEEL IN CONTACT WITH ALUMINUM TO BE PLATED OR PAINTED)

TYPICAL EDGE DISTANCE

INTO CONCRETE AND MASONRY = 3" MIN.
INTO WOOD STRUCTURE = 1" MIN.
INTO METAL STRUCTURE = 1/2" MIN.

SEALANTS:

ALL FRAME AND LEAF CORNERS AND JOINTS SEALED WITH ADSEL OR TEKNA 50729 SEALANTS.

PRODUCT REVISED
in complying with the Florida
Building Code
Acceptance No. 06-1019.06
Expiration Date 06/10/09
By
Miami Dade Product Control
Division

Engr: DR. HUMAYOUN FAROOQ
STRUCTURES
FLA. PE # 16557
C.A.N. 3538

OCT 05 2006

AL-FAROOQ CORPORATION
ENGINEERS & PRODUCT DEVELOPMENT
1235 S.W. 87 AVE
MIAMI, FLORIDA 33174
TEL. (305) 264-8100 FAX. (305) 262-6978
COMP-ANL\W04-01EWD

ALUM OUTSWING ENTRANCE DOOR (IMPACT)

EUROTECH WINDOWS & DOORS
250 N.E. 32nd STREET
FT. LAUDERDALE, FL. 33334
TEL. (954) 630-0217

revisions:

no	date	by	description
A	04.28.06		UPDATED FOR 2004 FBC

date: 01-15-04
scale: 3/8" = 1"
dr. by: HAMID
chk. by:

drawing no.
W04-01

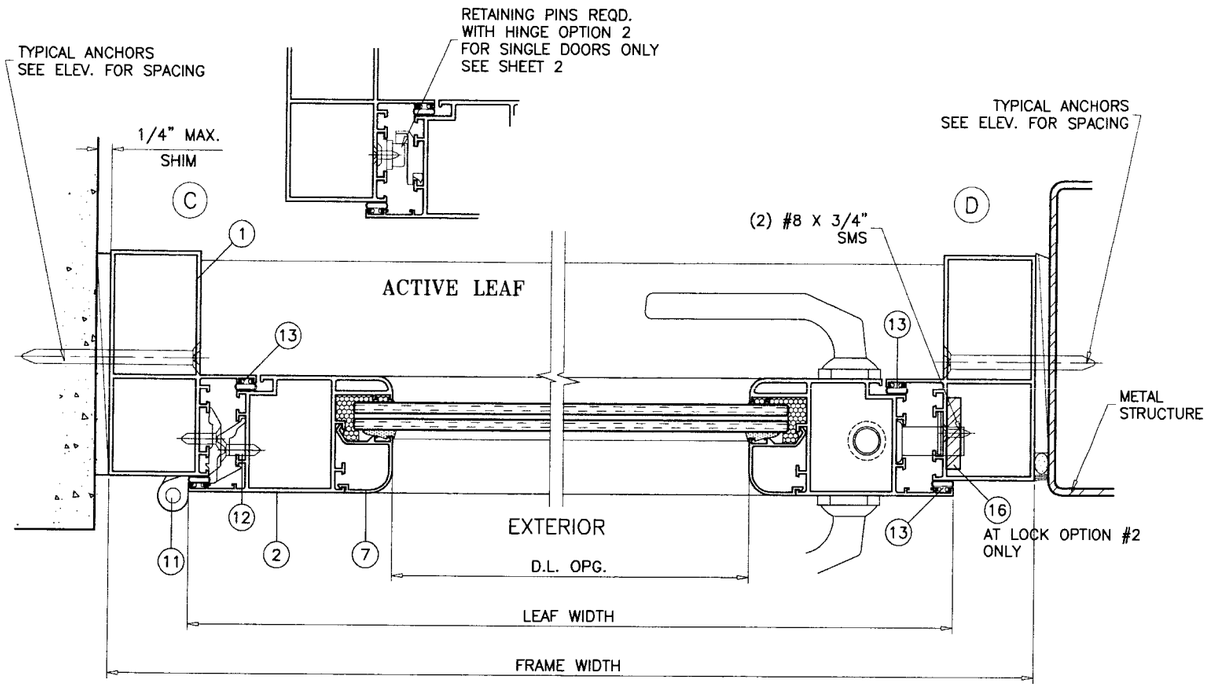

SINGLE DOOR

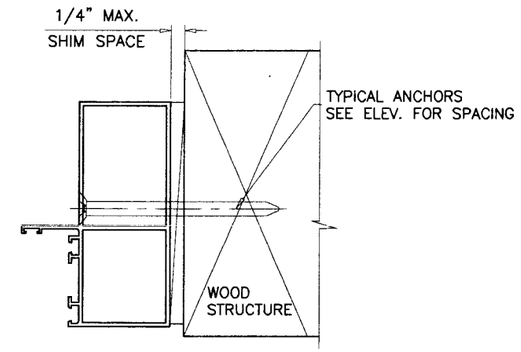

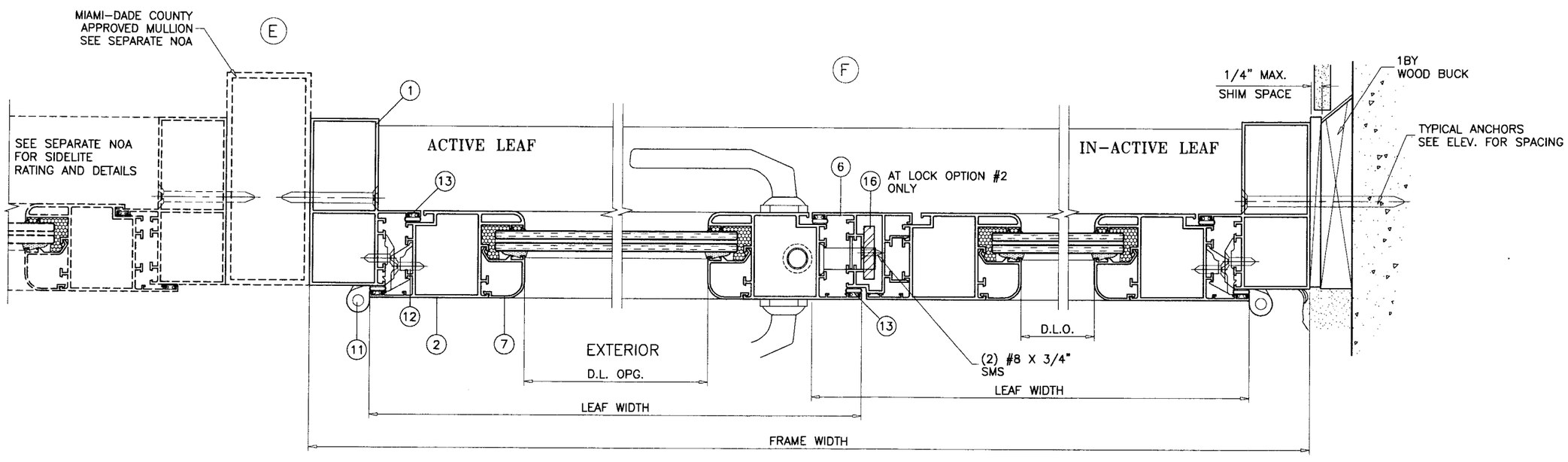

DOUBLE DOOR

PRODUCT REVISED
complying with the Florida
Building Code
Acceptance No. 06-1019.06
Expiration Date 06/10/09
By
Miami-Dade Product Control
Division

Engr: DR. HUMAYOUN FAROOQ
STRUCTURES
FLA. PE # 16557
C.A.N. 3538

OCT 05 2006

AL-FAROOQ CORPORATION
ENGINEERS & PRODUCT DEVELOPMENT
1235 S.W. 87 AVE
MIAMI, FLORIDA 33174
TEL. (305) 264-8100 FAX. (305) 262-6978
COMP-ANL\W04-01EWD

ALUM OUTSWING ENTRANCE DOOR (IMPACT)

EUROTECH WINDOWS & DOORS
250 N.E. 32nd STREET
FT. LAUDERDALE, FL. 33334
TEL. (954) 630-9967 TEL. (954) 630-0217

revisions:

no	date	by	description
A	04.28.06		UPDATED FOR 2004 FBC

date: 01-15-04
scale: 3/8" = 1"
dr. by: HAMID
chk. by:

drawing no.
W04-01

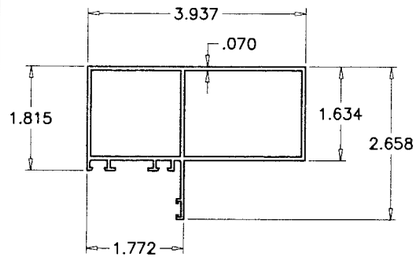

DOOR FRAME

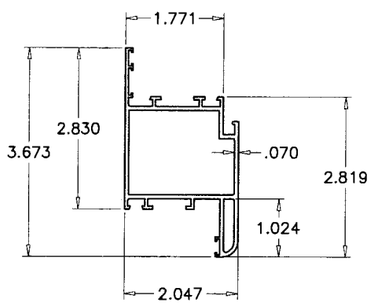

DOOR LEAF

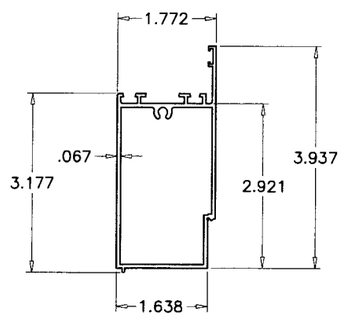

DOOR BASE BOARD

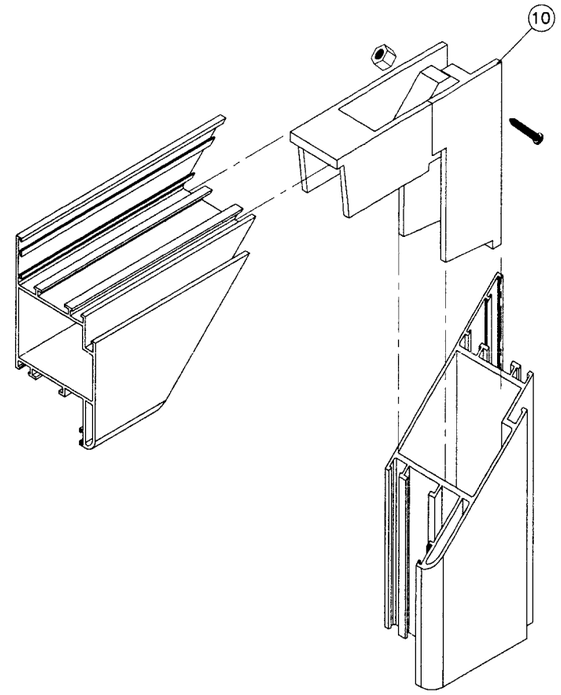

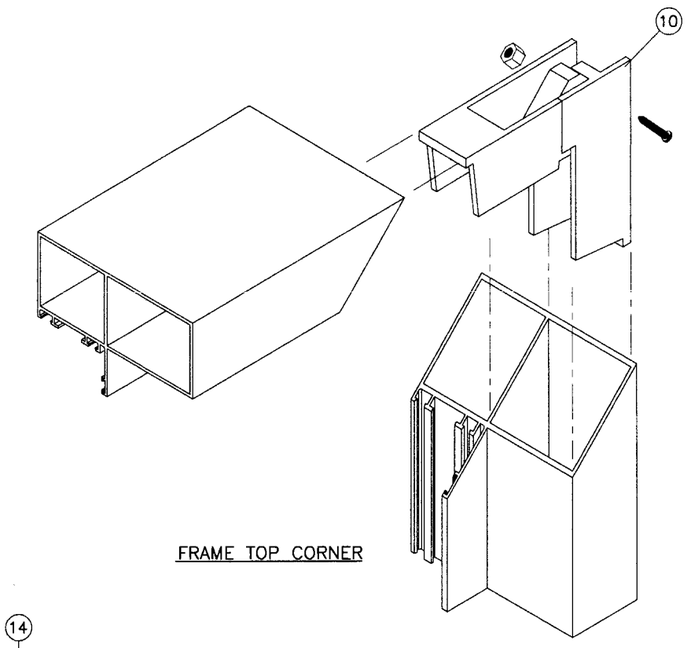

FRAME TOP CORNER

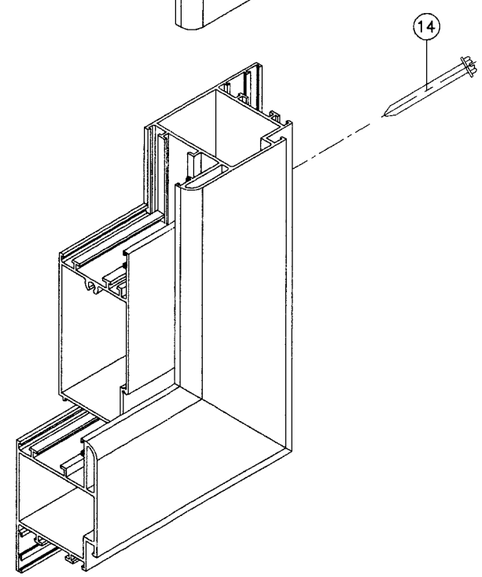

LEAF CORNERS

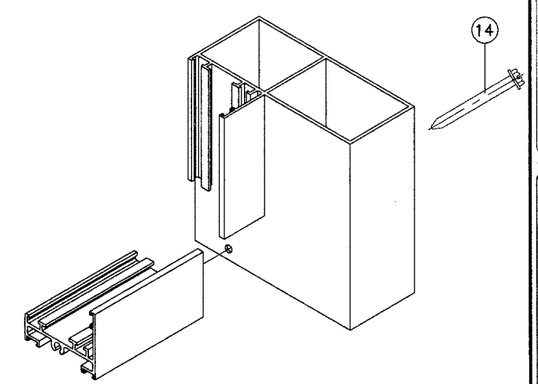

FRAME BOTTOM CORNER

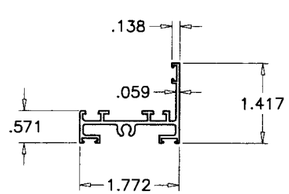

FRAME SILL

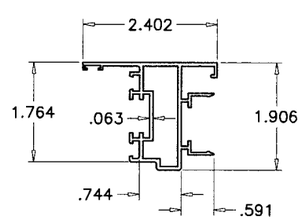

ASTRAGAL STILE

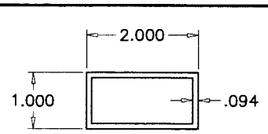

SILL BASE

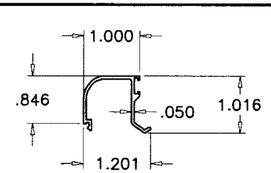

GLAZING BEAD

PRODUCT REVISED
as complying with the Florida
Building Code
Acceptance No. 06-1019.06
Expiration Date 06/10/09
By
Miami-Dade Product Control
Division

Engr: DR. HUMAYOUN FAROOQ
STRUCTURES
FLA. PE # 16557
C.A.N. 3538

OCT 05 2006

AL-FAROOQ CORPORATION
ENGINEERS & PRODUCT DEVELOPMENT
1235 S.W. 87 AVE
MIAMI, FLORIDA 33174
TEL. (305) 264-8100 FAX. (305) 262-6978

COMP-ANL\W04-01EWD

ALUM OUTSWING ENTRANCE DOOR (IMPACT)

EUROTECH WINDOWS & DOORS
250 N.E. 32nd STREET
FT. LAUDERDALE, FL. 33334
TEL. (954) 630-9967 TEL. (954) 630-0217

revisions:

no	date	by	description
A	04.28.06		NO CHANGE THIS SHEET

date: 01-15-04
scale: 3/8" = 1"
dr. by: HAMID
chk. by:

drawing no.
W04-01

sheet 5 of 5