MIAMI-DADE COUNTY

BUILDING CODE COMPLIANCE OFFICE (BCCO)
PRODUCT CONTROL DIVISION

MIAMI-DADE COUNTY, FLORIDA
METRO-DADE FLAGLER BUILDING
140 WEST FLAGLER STREET, SUITE 1603
MIAMI, FLORIDA 33130-1563
(305) 375-2901 FAX (305) 375-2908
www.buildingcodeonline.com

NOTICE OF ACCEPTANCE (NOA)

Superior Window Corporation
9875 N. W. 79th Avenue
Hialeah Gardens, Fl. 33016

SCOPE:

This NOA is being issued under the applicable rules and regulations governing the use of construction materials. The documentation submitted has been reviewed by Miami-Dade County Product Control Division and accepted by the Board of Rules and Appeals (BORA) to be used in Miami Dade County and other areas where allowed by the Authority Having Jurisdiction (AHJ).

This NOA shall not be valid after the expiration date stated below. The Miami-Dade County Product Control Division (In Miami Dade County) and/or the AHJ (in areas other than Miami Dade County) reserve the right to have this product or material tested for quality assurance purposes. If this product or material fails to perform in the accepted manner, the manufacturer will incur the expense of such testing and the AHJ may immediately revoke, modify, or suspend the use of such product or material within their jurisdiction. BORA reserves the right to revoke this acceptance, if it is determined by Miami-Dade County Product Control Division that this product or material fails to meet the requirements of the applicable building code.

This product is approved as described herein, and has been designed to comply with the Florida Building Code, including High Velocity Hurricane Zone of the Florida Building Code.

DESCRIPTION: Series "5500" Aluminum Double Hung Windows w/ Impact Louver

APPROVAL DOCUMENT: Drawing No. **06-N/01.,** titled "series 5500 Aluminum Double Hung Window w/ Impact Louver", prepared by manufacturer, sheets 1 through 8 of 8, dated 10/16/06 with last revised on Dec 07, 2006, signed and sealed by John D. Buerosse, P.E., bearing the Miami-Dade County Product Control Renewal stamp with the Notice of Acceptance number and expiration date by the Miami-Dade County Product Control Division.

MISSILE IMPACT RATING: Large & Small Missile Impact Resistant
Limitation: Louver must be engaged for impact protection

LABELING: Each unit shall bear a permanent label with the manufacturer's name or logo, city, state and following statement: "Miami-Dade County Product Control Approved", unless otherwise noted herein.

RENEWAL of this NOA shall be considered after a renewal application has been filed and there has been no change in the applicable building code negatively affecting the performance of this product.

TERMINATION of this NOA will occur after the expiration date or if there has been a revision or change in the materials, use, and/or manufacture of the product or process. Misuse of this NOA as an endorsement of any product, for sales, advertising or any other purposes shall automatically terminate this NOA. Failure to comply with any section of this NOA shall be cause for termination and removal of NOA.

ADVERTISEMENT: The NOA number preceded by the words Miami-Dade County, Florida, and followed by the expiration date may be displayed in advertising literature. If any portion of the NOA is displayed, then it shall be done in its entirety.

INSPECTION: A copy of this entire NOA shall be provided to the user by the manufacturer or its distributors and shall be available for inspection at the job site at the request of the Building Official.

This NOA **revises** & **renews # 01-0919.12** consists of this page 1 and evidence sheets E-1, as well as approval document mentioned above.

The submitted documentation was reviewed by **Ishaq I. Chanda, P.E.**

PRODUCT CONTROL ACCEPTED

12/8/16

NOTICE OF ACCEPTANCE: EVIDENCE SUBMITTED

A. DRAWINGS

1. Manufacturer's die drawings and sections.
2. Drawing No. **06-N/01.,** titled "series 5500 Aluminum Double Hung Window w/ Impact Louver", prepared by manufacturer, sheets 1 through 8 of 8, dated 10/16/06 with last revised on Dec 07, 2006, signed and sealed by John D. Buerosse, P.E

B. TESTS

1. Test reports on 1) Air Infiltration Test, per TAS 202-94
   2) Uniform Static Air Pressure Test, Loading per TAS 202-94
   3) Water Resistance Test, per PA 202-94
   4) Forced Entry Test, per TAS 202-94
   5) Small Missile Impact Test per FBC, TAS 201-94
   6) Cyclic Wind Pressure Loading per FBC, TAS 203-94

   Along with marked-up drawings and installation diagram of double hung windows, prepared by Hurricane Engineering Testing Inc., Test Reports No(s). **HETI-06-4064A & B** and HETI-**06-4059A & B** dated October 17, 2006 respectively, signed and sealed by Arshad Viqar, P. E.
2. Test reports on 1) Air Infiltration Test, per PA 202-94
   2) Uniform Static Air Pressure Test, Loading per PA 202-94
   3) Water Resistance Test, per PA 202-94
   4) Forced Entry Test, per PA 202-94
   5) Small Missile Impact Test per SFBC, PA 201-94
   6) Cyclic Wind Pressure Loading per SFBC, PA 203-94

   Along with marked-up drawings and installation diagram of double hung windows, prepared by National Certified Testing Laboratories, Test Reports No(s). **NCTL-210-2237-1, 2 & 3,** dated Sep.08-Oct 11, 1999 respectively, signed and sealed by Barry Portnoy, P. E.

C. CALCULATIONS

1. Anchor Calculations and structural analysis dated 10-23-06, prepared, signed and sealed by John D. Buerosse, P. E.
2. Glazing complies w/ASTME-1300-98 & 1300-02.

D. QUALITY ASSURANCE BY:

1. Miami-Dade Building Code Compliance Office. (BCCO).

E. MATERIAL CERTIFICATIONS

1. None

F. STATEMENTS

1. Statement letter of conformance and "No financial interest", dated 10-23-2006, signed and sealed by John D. Buerosse, P.E.
2. Statement of compliance, issued as part of above referenced test reports.

G. OTHER

1. This NOA **revises** & **renews # 01-0919.12, expired on 12-04-2006.**
2. Verification tests **HETI-06-4064A & B** and **HETI-06-4059A & B per TAS 201, 202 & 203-94.**

Ishaq I. Chanda

Ishaq I. Chanda, P.E.
Product Control Examiner
NOA No 06-1026.06
Expiration Date: December 04, 2011
Approval Date: December 26, 2006

INDEX:

SHEET	DESCRIPTION
1. –	GENERAL NOTES, INDEX, TYPICAL ELEVATION 48X86 DP +60/–70
2. –	GENERAL NOTES, INDEX, TYPICAL ELEVATION 48X72 DP +61/–82
3. –	MATING JAMB ANCHOR DESIGN TABLE 1
4. –	INSTALLATION & SECTIONS DETAILS
5. –	INSTALLATION & SECTIONS DETAILS
6. –	BILL OF MATERIAL & GLAZING DETAIL
7. –	FRAMING EXTRUSION DIE DRAWINGS
8. –	FRAME AND SASH ASSEMBLY DRAWINGS

GENERAL NOTES:

1– CODE; THIS PRODUCT HAS BEEN TESTED AND DESIGNED IN ACCORDANCE WITH THE FLORIDA BUILDING CODE 2004 EDITION – (HIGH VELOCITY SECTION).

2– 33 1/2% INCREASE IN ALLOWABLE LOADS HAVE NOT BEEN USED IN THE DESIGN OF THE ANCHORS FOR THIS PRODUCT APPROVAL, HOWEVER, WOOD ANCHORS WITH 1.33 INCREASE FOR WIND LOAD DURATION HAVE BEEN USED.

3– THIS PRODUCT IS AN ALUMINUM DOUBLE HUNG TYPE WINDOW WITH LARGE MISSILE IMPACT RESISTANT LOUVER BLADES WITH 1/4" TEMPERED GLASS.

4– MATERIAL; ALL ALUMINUM PARTS TO BE 6063–T6 OR AS INDICATED IN BILL OF MATERIAL.

5– LISTING;
SERIES 5500 – ALUMINUM DOUBLE HUNG
WITH IMPACT LOUVERS
SUPERIOR WINDOW CORP.
HIALEAH GARDENS – DADE COUNTY
FLORIDA
DADE COUNTY PRODUCT CONTROL APPROVED

6– FASTENERS; ASSEMBLY SCREWS AND ANCHORS SHALL BE AS SPECIFIED IN THIS CURRENT SET OF DRAWINGS.

7– DESIGN LOADS; LOADS MUST BE CALCULATED BY A PROFESSIONAL ARCHITECT OR ENGINEER FOR EACH SPECIFIC PROJECT. THE CALCULATED DESIGNED PRESSURE MUST NOT EXCEED THE MAX. MODULAR SIZE OR THE ALLOWABLE APPROVED PRESSURE SHOWN AT BOTTOM RIGHT SIDE OF SHEET 1 AND SHEET 2.

8– USE; IT SHALL BE THE RESPONSIBILITY OF THE CONTRACTOR, ARCHITECT OR ENGINEER OF RECORD TO VERIFY THE FOLLOWING;
8.1– THE STABILITY OF THE STRUCTURE WHERE THE UNIT IS TO BE ATTACHED INSURING PROPER ANCHORAGE.
8.2– THE SITE SPECIFIC PROJECT CRITERIA, SUCH AS BUT NOT LIMITED TO, LOCAL CODE REQUIREMENTS, DESIGNED PRESSURES ETC.
8.3– THAT THIS APPROVAL IS ADEQUATE TO THE SPECIFIC PROJECT.

9– 1X OR 2X BUCK TO BE PROPERLY SECURED & REVIEWED BY OFFICIAL HAVING JURISDICTION.

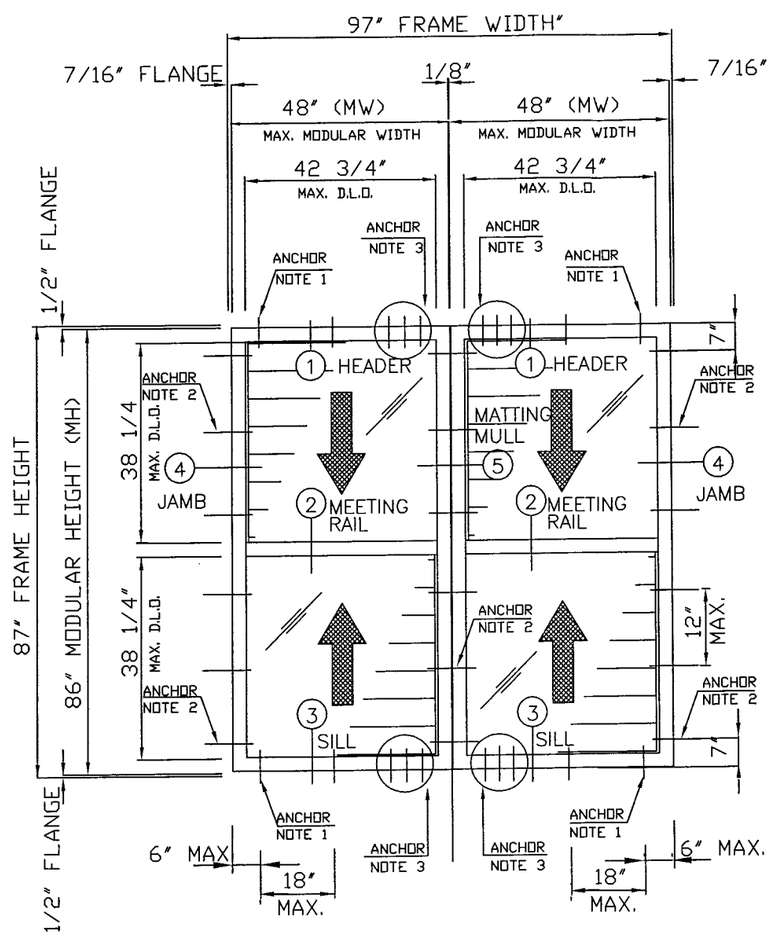

SIDE BY SIDE INSTALLATION

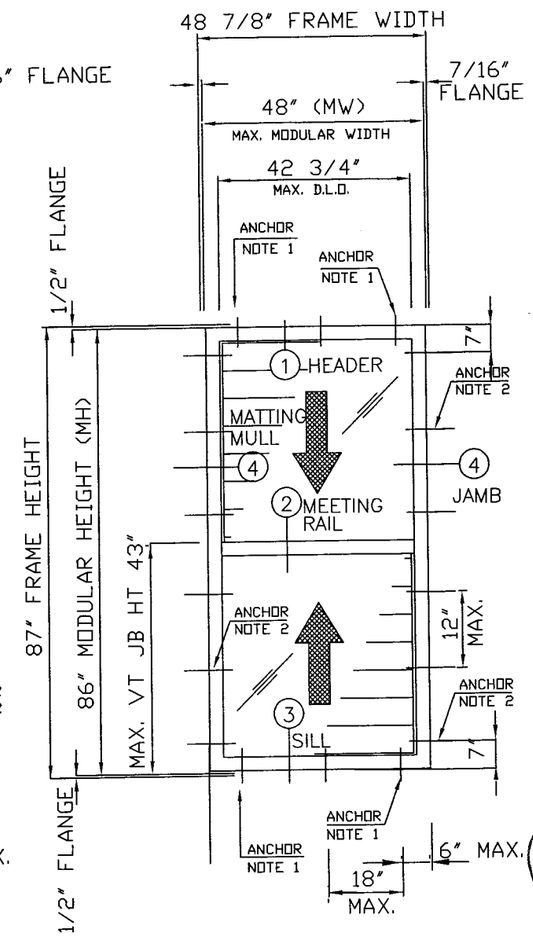

SINGLE INSTALLATION

ANCHOR NOTE: 1

PERIMETER HEAD & SILL ANCHORS MAX. 6" FROM MODULAR WIDTH, AND MAXIMUM OF 18" ON CENTER FOR SINGLE UNIT. SEE ANCHOR NOTE 3 FOR HEAD & SILL END ANCHOR LOCATION AT SIDE BY SIDE UNITS.

ANCHOR NOTE: 2

PERIMETER JAMB ANCHORS MAX. 7" FROM FROM END OF MODULAR HEIGHT, AND MAXIMUM OF 12" ON CENTER FOR SINGLE UNIT AND SIDE BY SIDE MATING JAMBS. MULLED WITH 1/4–20X 3/4 PAN PH MS WITH 1/4–20 HEX NUT.

ANCHOR NOTE: 3

HEAD & SILL ANCHORS AT SIDE BY SIDE MATING JAMBS END SHALL BE PER DETAIL 5 ON SHEET 3. ANCHOR QUANTITY & SELECTIONS SHALL BE PER TABLE 1 ON SHEET 3.

USER INSTRUCTIONS:

1– DETERMINE PROJECT DESIGN WIND LOAD PRESSURES AS PER ITEM 7 OF GENERAL NOTES, SHEET 1.

2– SELECT PERIMETER ANCHOR PER ANCHOR NOTES 1 & 2

3– CALCULATE QUANTITY AND TYPE OF ANCHOR TO BE USED FOR A GIVEN TRIBUTARY MODULAR WIDTH X MODULAR HEIGHT AS PER TABLE 1 ON SHEET 3 FOR SIDE BY SIDE APPLICATION.

4– SELECT ANCHOR SCHEDULE PER SHEET 3.

MAX. MODULAR SIZE (MW x MH)
48" X 86" (ALL SIZES)

ALLOWABLE DESIGNED PRESSURE
+60/-70 PSF

LARGE AND SMALL MISSILE IMPACT

SUPERIOR WINDOW CORP.
9875 N.W. 79TH AVENUE
HIALEAH GARDENS, FL. 33016
(305) 826–4800
FAX – (305) 826–7499
WWW.SUPERIORWINDOW.COM
E–MAIL: EDITH@SUPERIORWINDOW.COM

SERIES # 5500 ALUMINUM DOUBLE HUNG W/ IMPACT LOUVERS

WINDOW SIZE 48" X 86"

REVISIONS

No.	DESCRIPTION	DATE

JOHN D. BUEROSSE
P.E.0050867
3450 N.E. 6 TH TERRACE
POMPANO BEACH, FL. 33064
1-800-813-1822

DEC 0 7 2006

ENGINEER SEAL
JOHN D. BUEROSSE
P.E.0050867

PRODUCT CONTROL DIVISION:

PRODUCT RENEWED
as complying with the Florida Building Code
Acceptance No. 06-1026.06
Expiration Date DEC 04 2011
By Ishaq I. Chandk
Miami Dade Product Control Division

DATE: 10/16/06	DRAWN BY: E. TODZEY
SCALE : NONE	SHEET: 1 OF 8
DWG:06–N/01	

INDEX:

SHEET	DESCRIPTION
1. –	GENERAL NOTES, INDEX, TYPICAL ELEVATION 48X86 DP +60/–70
2. –	GENERAL NOTES, INDEX, TYPICAL ELEVATION 48X72 DP +61/–82
3. –	MATING JAMB ANCHOR DESIGN TABLE 1
4. –	INSTALLATION & SECTIONS DETAILS
5. –	INSTALLATION & SECTIONS DETAILS
6. –	BILL OF MATERIAL & GLAZING DETAIL
7. –	FRAMING EXTRUSION DIE DRAWINGS
8. –	FRAME AND SASH ASSEMBLY DRAWINGS

GENERAL NOTES:

1– CODE; THIS PRODUCT HAS BEEN TESTED AND DESIGNED IN ACCORDANCE WITH THE FLORIDA BUILDING CODE 2004 EDITION – (HIGH VELOCITY SECTION).

2– 33 1/2% INCREASE IN ALLOWABLE LOADS HAVE NOT BEEN USED IN THE DESIGN OF THE ANCHORS FOR THIS PRODUCT APPROVAL, HOWEVER, WOOD ANCHORS WITH 1.33 INCREASE FOR WIND LOAD DURATION HAVE BEEN USED.

3– THIS PRODUCT IS AN ALUMINUM DOUBLE HUNG TYPE WINDOW WITH LARGE MISSILE IMPACT RESISTANT LOUVER BLADES WITH 1/4" TEMPERED GLASS.

4– MATERIAL; ALL ALUMINUM PARTS TO BE 6063–T6 OR AS INDICATED IN BILL OF MATERIAL.

5– LISTING;
SERIES 5500 – ALUMINUM DOUBLE HUNG WITH IMPACT LOUVERS
SUPERIOR WINDOW CORP.
HIALEAH GARDENS – DADE COUNTY FLORIDA
DADE COUNTY PRODUCT CONTROL APPROVED

6– FASTENERS; ASSEMBLY SCREWS AND ANCHORS SHALL BE AS SPECIFIED IN THIS CURRENT SET OF DRAWINGS.

7– DESIGN LOADS; LOADS MUST BE CALCULATED BY A PROFESSIONAL ARCHITECT OR ENGINEER FOR EACH SPECIFIC PROJECT. THE CALCULATED DESIGNED PRESSURE MUST NOT EXCEED THE MAX. MODULAR SIZE OR THE ALLOWABLE APPROVED PRESSURE SHOWN AT BOTTOM RIGHT SIDE OF SHEET 1 AND SHEET 2.

8– USE; IT SHALL BE THE RESPONSIBILITY OF THE CONTRACTOR, ARCHITECT OR ENGINEER OF RECORD TO VERIFY THE FOLLOWING;
8.1– THE STABILITY OF THE STRUCTURE WHERE THE UNIT IS TO BE ATTACHED INSURING PROPER ANCHORAGE.
8.2– THE SITE SPECIFIC PROJECT CRITERIA, SUCH AS BUT NOT LIMITED TO, LOCAL CODE REQUIREMENTS, DESIGNED PRESSURES ETC.
8.3– THAT THIS APPROVAL IS ADEQUATE TO THE SPECIFIC PROJECT.

9– 1X OR 2X BUCK TO BE PROPERLY SECURED & REVIEWED BY OFFICIAL HAVING JURISDICTION.

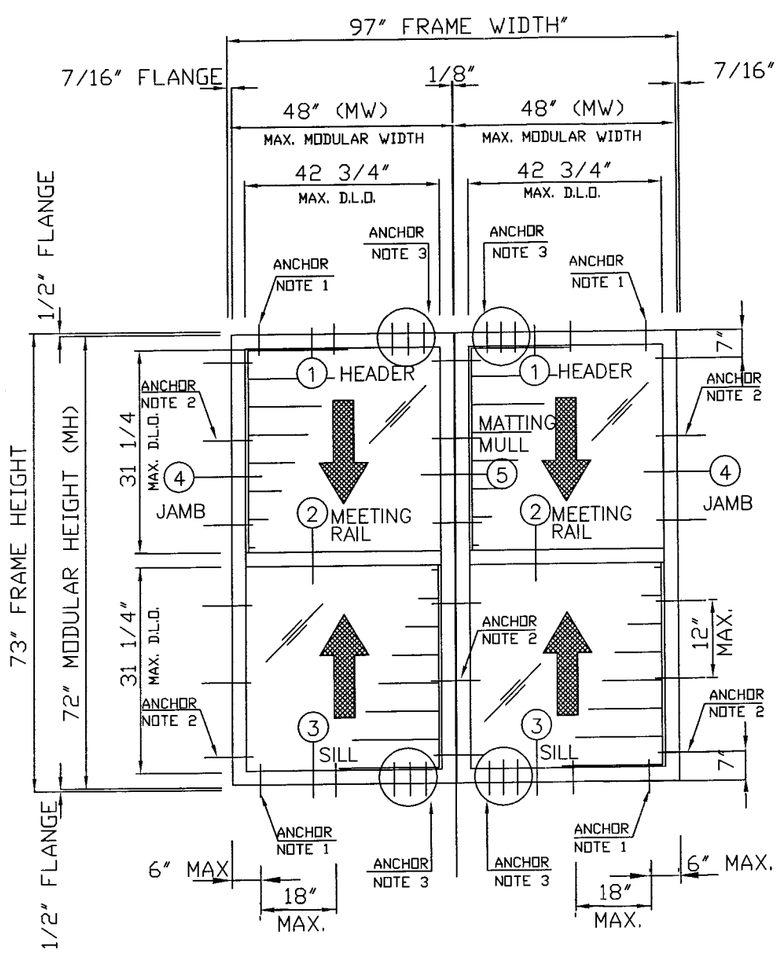

SIDE BY SIDE INSTALLATION

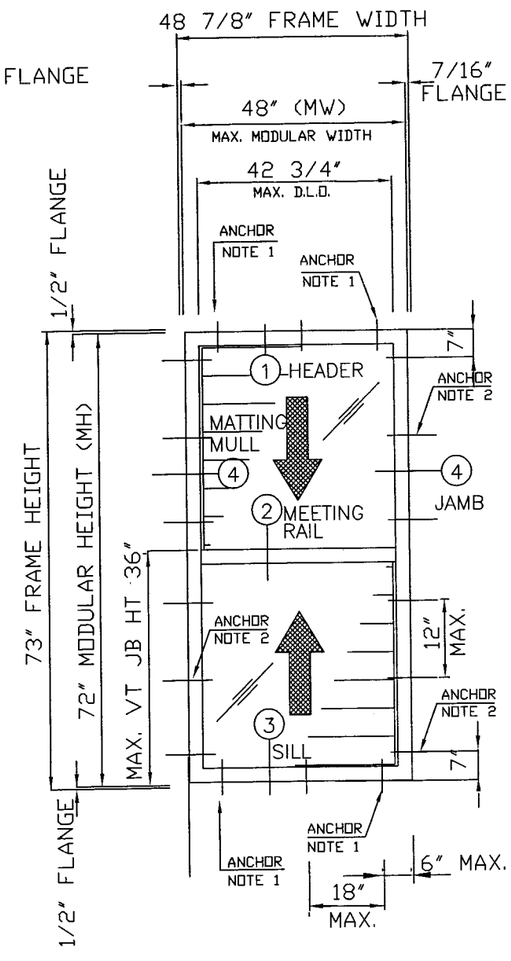

SINGLE INSTALLATION

ANCHOR NOTE: 1
PERIMETER HEAD & SILL ANCHORS MAX. 6" FROM MODULAR WIDTH, AND MAXIMUM OF 18" ON CENTER FOR SINGLE UNIT. SEE ANCHOR NOTE 3 FOR HEAD & SILL END ANCHOR LOCATION AT SIDE BY SIDE UNITS.

ANCHOR NOTE: 2
PERIMETER JAMB ANCHORS MAX. 7" FROM FROM END OF MODULAR HEIGHT, AND MAXIMUM OF 12" ON CENTER FOR SINGLE UNIT AND SIDE BY SIDE MATING JAMBS. MULLED WITH 1/4–20X 3/4 PAN PH MS WITH 1/4–20 HEX NUT.

ANCHOR NOTE: 3
HEAD & SILL ANCHORS AT SIDE BY SIDE MATING JAMBS END SHALL BE PER DETAIL 5 ON SHEET 3. ANCHOR QUANTITY & SELECTIONS SHALL BE PER TABLE 1 ON SHEET 3.

USER INSTRUCTIONS:

1– DETERMINE PROJECT DESIGN WIND LOAD PRESSURES AS PER ITEM 7 OF GENERAL NOTES, SHEET 1.

2– SELECT PERIMETER ANCHOR PER ANCHOR NOTES 1 & 2

3– CALCULATE QUANTITY AND TYPE OF ANCHOR TO BE USED FOR A GIVEN TRIBUTARY MODULAR WIDTH X MODULAR HEIGHT AS PER TABLE 1 ON SHEET 3 FOR SIDE BY SIDE APPLICATION.

4– SELECT ANCHOR SCHEDULE PER SHEET 3.

MAX. MODULAR SIZE (MW x MH)
48" X 72" AND SMALLER SIZES

ALLOWABLE DESIGNED PRESSURE
+61/-82 PSF

LARGE AND SMALL MISSILE IMPACT

SUPERIOR WINDOW CORP.
9875 N.W. 79TH AVENUE
HIALEAH GARDENS, FL. 33016
(305) 826–4800
FAX – (305) 826–7499
WWW.SUPERIORWINDOW.COM
E–MAIL: EDITH@SUPERIORWINDOW.COM

SERIES # 5500 ALUMINUM DOUBLE HUNG W/ IMPACT LOUVERS

WINDOW SIZE 48" X 72"

REVISIONS

No.	DESCRIPTION	DATE

JOHN D. BUEROSSE
P.E.0050867
3450 N.E. 6 TH TERRACE
POMPANO BEACH, FL. 33064
1-800-813-1822

DEC 07 2006

ENGINEER SEAL
JOHN D. BUEROSSE
P.E.0050867

PRODUCT CONTROL DIVISION:

PRODUCT RENEWED
as complying with the Florida Building Code
Acceptance No. 06-1026.06
Expiration Date DEC 04 2011
By Isluny L. Chanda
Miami Dade Product Control Division

DATE: 10/16/06	DRAWN BY: E. TODZEY
SCALE : NONE	SHEET: 2 OF 8
DWG:06–N/01	

DETAIL 5: DUAL MODULAR FRAME ANCHORAGE SPACING LAY-OUT @ HEADS & SILLS END AT MEETING JAMB

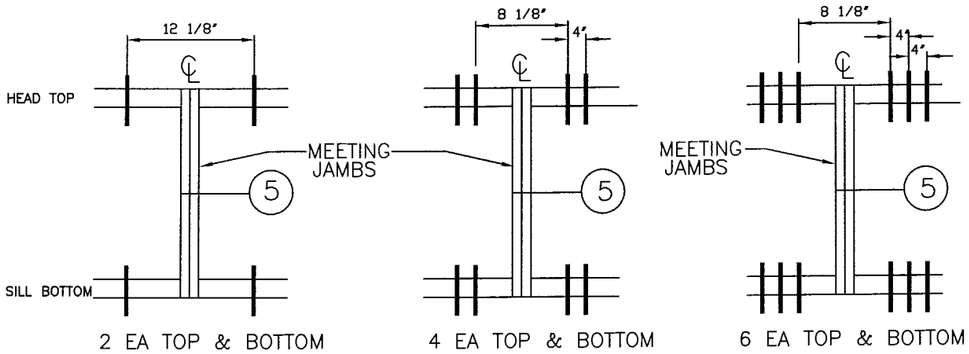

ANCHOR SCHEDULE:

TYPE	DESCRIPTION	EMBEDMENT	SUBSTRATE	MIN. EDGE DIM.
A	#14 FLAT HEAD SS WOOD SCREWS	1 7/16"	PT WOOD (SG)=55)	1" MIN.
B	#1/4" FLAT HEAD TAPCON	1 3/4"	3200 PSI CONCRETE	2 1/2" MIN.
C	1/4-20 DRIL-FLEX SCREWS GRADE 5	1/8"	6063-T5 ALUMINUM	3/4" MIN.
D	1/4-20 DRIL-FLEX SCREWS GRADE 5	1/8"	ASTM-A36 STEEL	3/4" MIN.

SIDE BY SIDE INSTALLATION

DETAIL 5- ONE (1) ANCHOR EACH EACH SIDE AT HEAD & SILL

DETAIL 5-TWO (2) ANCHORS EACH SIDE AT HEAD & SILL

DETAIL 5-THREE (3) ANCHORS EACH SIDE AT HEAD & SILL

ANCHOR NOTES:

1- ANCHOR A IS A GENERIC STAINLESS STEEL 300 SERIES.
2- ANCHOR B ARE MANUFACTURED BY ELCO AND/OR ITW BUILDEX
3- ANCHOR TYPE C & D BY ELCO.

FOLLOWING NOTES APPLY TO SIDE BY SIDE MEETING JAMB END

4- WHEN REQUIRED DUE TO OVERLAPPING, THE ANCHOR SPACING FOR ANCHOR TYPE A SHALL BE REDUCED FROM 4" TO 2" MIN. O/C.
5- WHEN DUE TO OVERLAPPING, THE ANCHOR SPACING FOR ANCHOR TYPE C AND D SHALL BE REDUCED FROM 4" TO 1" MIN. O/C.
6- SEE SECTION DETAIL 1, 3 AND 4 ON SHEET 4 AND 5 FOR EDGE DISTANCE REQUIREMENTS FOR ANCHOR TYPE A THRU D.

TABLE 1 - NUMBER OF ANCHOR REQUIRED AT HEAD & SILL FOR MATING JAMB DETAIL 5

TMW	ANCHOR TYPE	DETAIL 5 MODULAR HEIGHT (MH) 30"	37"	40 1/2"	47 1/2"	61 1/2"	72"	86"
30 1/8"	A	2	2	2	2	4	4	4
	B	2	2	2	2	4	4	4
	C	2	2	2	2	4	4	4
	D	2	2	2	2	4	4	4
36 1/8"	A	2	2	2	4	4	4	4
	B	2	2	2	4	4	4	4
	C	2	2	2	4	4	4	4
	D	2	2	2	4	4	4	4
42 1/8"	A	2	2	4	4	4	4	6
	B	2	2	4	4	4	4	6
	C	2	2	4	4	4	4	6
	D	2	2	4	4	4	4	6
48 1/8"	A	2	4	4	4	4	6	6
	B	2	4	4	4	4	6	6
	C	2	4	4	4	4	6	6
	D	2	4	4	4	4	6	6

TMW=TRIBUTARY MODULE WIDTH

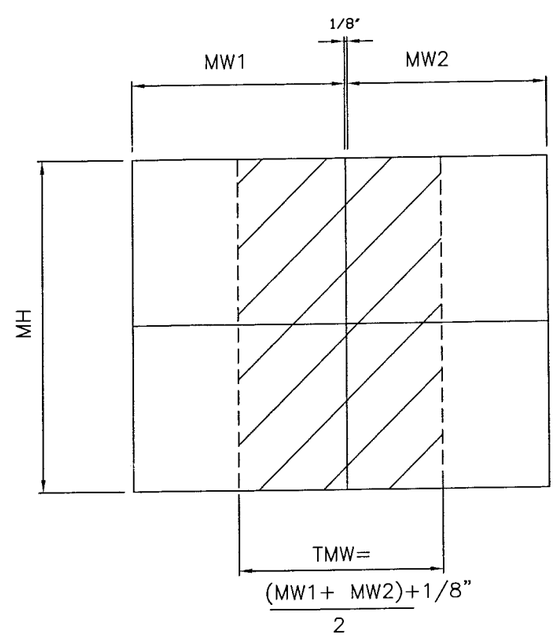

SUPERIOR WINDOW CORP.
9875 N.W. 79TH AVENUE
HIALEAH GARDENS, FL. 33016
(305) 826-4800
FAX - (305) 826-7499
WWW.SUPERIORWINDOW.COM
E-MAIL: EDITH@SUPERIORWINDOW.COM

SERIES # 5500 ALUMINUM DOUBLE HUNG W/ IMPACT LOUVERS

WINDOW SIZE 48" X 86"

REVISIONS

No.	DESCRIPTION	DATE

JOHN D. BUEROSSE
P.E.0050867
3450 N.E. 6 TH TERRACE
POMPANO BEACH, FL. 33064
1-800-813-1822

DEC 07 2006

ENGINEER SEAL
JOHN D. BUEROSSE
P.E.0050867

PRODUCT CONTROL DIVISION:

PRODUCT RENEWED as complying with the Florida Building Code
Acceptance No 06-1026.06
Expiration Date DEC 04, 2011
By Ishan L. Chandra
Miami Dade Product Control Division

DATE: 10/16/06	DRAWN BY: E. TODZEY
SCALE : NONE	SHEET: 3 OF 8
DWG:06-N/01	

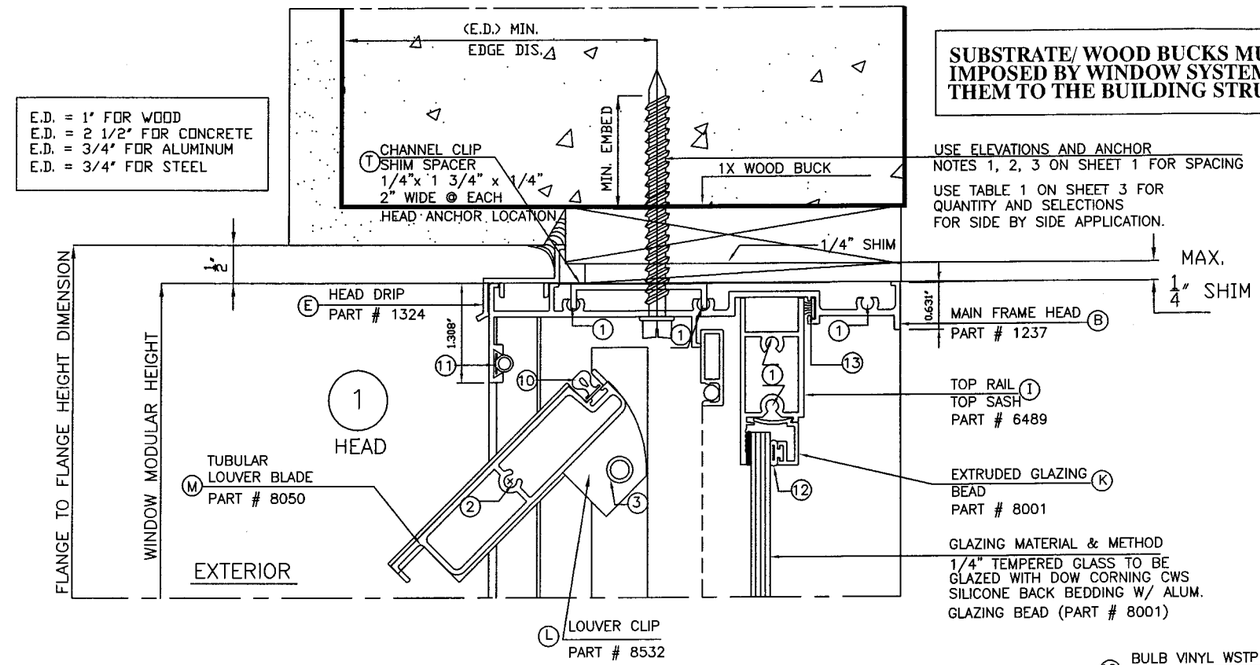

SUBSTRATE/ WOOD BUCKS MUST SUSTAIN LOADS IMPOSED BY WINDOW SYSTEM AND TRANSFER THEM TO THE BUILDING STRUCTURE.

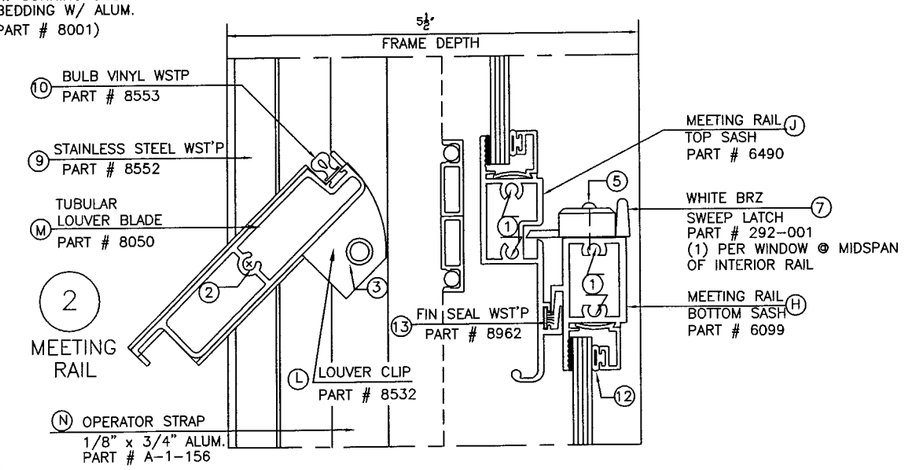

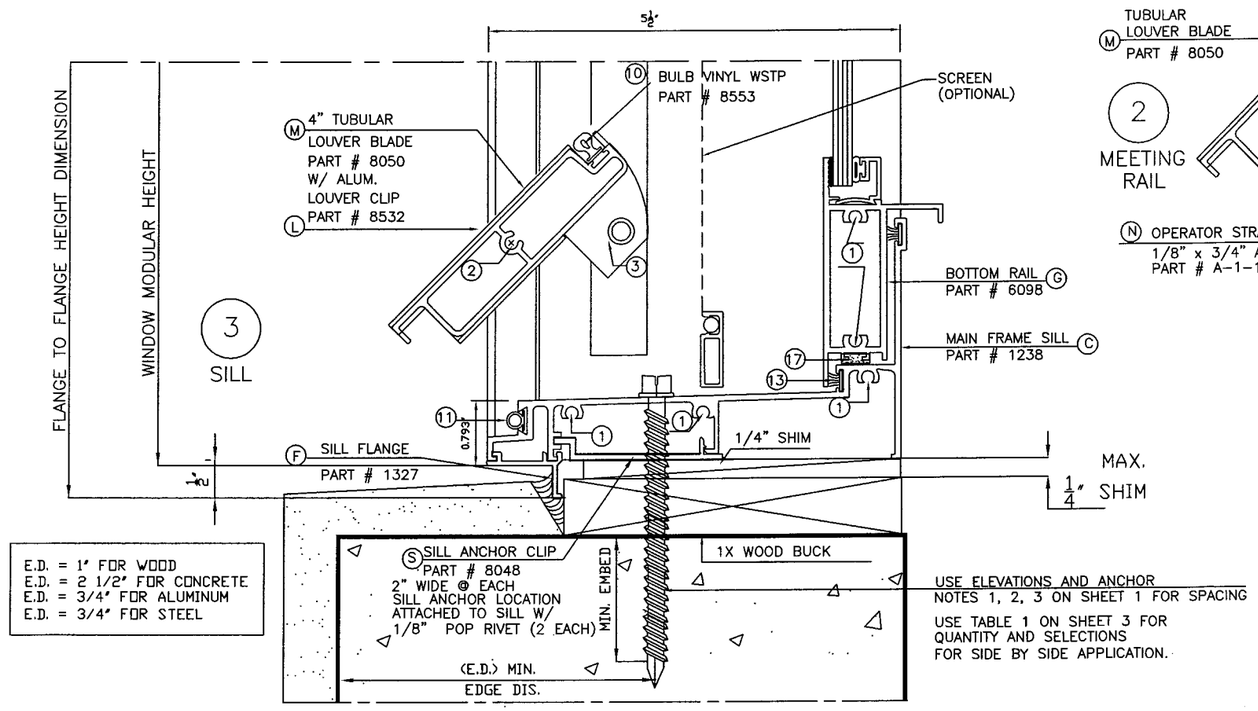

SUPERIOR WINDOW CORP.

9875 N.W. 79TH AVENUE
HIALEAH GARDENS, FL. 33016
(305) 826-4800
FAX - (305) 826-7499
WWW.SUPERIORWINDOW.COM
E-MAIL: EDITH@SUPERIORWINDOW.COM

SERIES # 5500 ALUMINUM DOUBLE HUNG W/ IMPACT LOUVERS

WINDOW SIZE 48" X 86"

REVISIONS

No.	DESCRIPTION	DATE

JOHN D. BUEROSSE
P.E.0050867
3450 N.E. 6 TH TERRACE
POMPANO BEACH, FL. 33064
1-800-813-1822

DEC 07 2006

ENGINEER SEAL
JOHN D. BUEROSSE
P.E.0050867

PRODUCT CONTROL DIVISION:

PRODUCT RENEWED
as complying with the Florida Building Code
Acceptance No 06-1026.06
Expiration Date DEC 04 2011
By [illegible]
Miami Dade Product Control Division

DATE: 10/16/06	DRAWN BY: E. TODZEY
SCALE : 1:2	SHEET: 4 OF 8
DWG:06-N/01	

SUBSTRATE/ WOOD BUCKS MUST SUSTAIN LOADS IMPOSED BY WINDOW SYSTEM AND TRANSFER THEM TO THE BUILDING STRUCTURE.

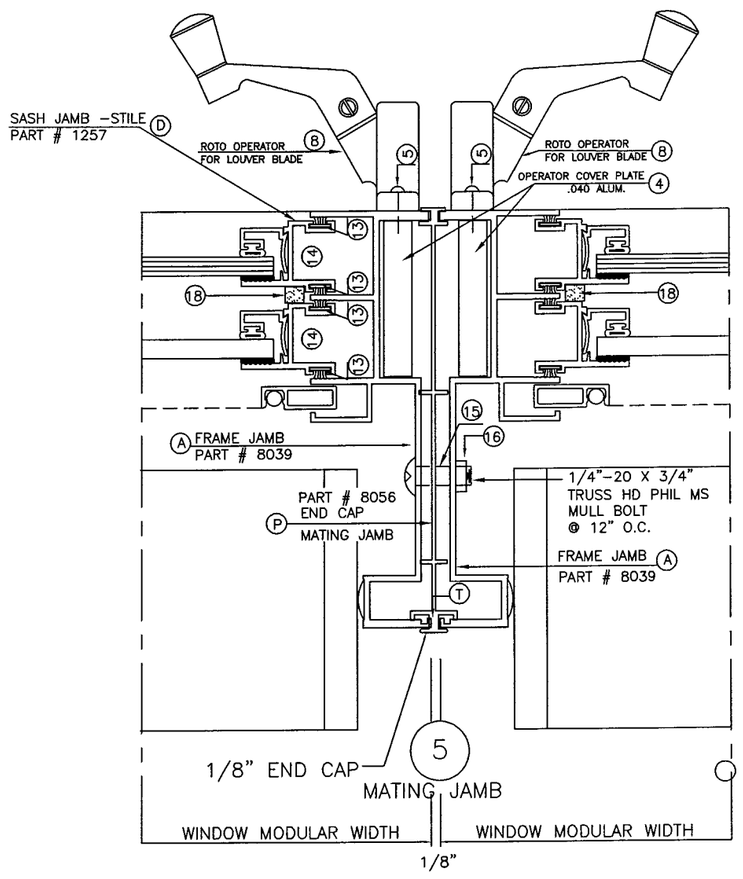

SIDE BY SIDE INSTALLATION

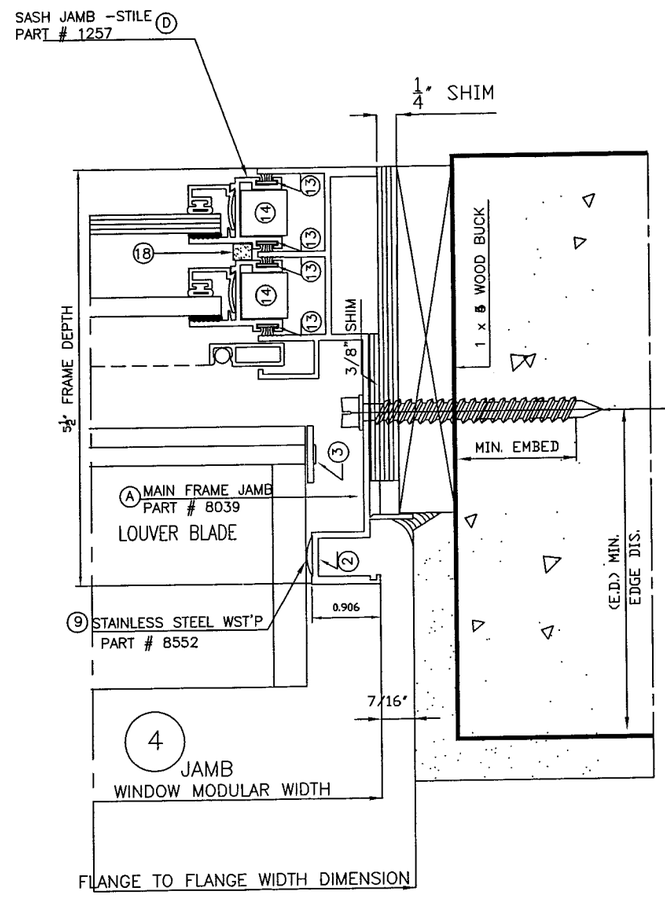

USE ELEVATIONS AND ANCHOR NOTES 1, 2, 3 ON SHEET 1 FOR SPACING

USE TABLE 1 ON SHEET 3 FOR QUANTITY AND SELECTIONS FOR SIDE BY SIDE INSTALLATION.

E.D. = 1" FOR WOOD
E.D. = 2 1/2" FOR CONCRETE
E.D. = 3/4" FOR ALUMINUM
E.D. = 3/4" FOR STEEL

SUPERIOR WINDOW CORP.
9875 N.W. 79TH AVENUE
HIALEAH GARDENS, FL. 33016
(305) 826-4800
FAX - (305) 826-7499
WWW.SUPERIORWINDOW.COM
E-MAIL: EDITH@SUPERIORWINDOW.COM

SERIES # 5500 ALUMINUM DOUBLE HUNG W/ IMPACT LOUVERS

WINDOW SIZE 48" X 86"

REVISIONS

No.	DESCRIPTION	DATE

JOHN D. BUEROSSE
P.E.0050867
3450 N.E. 6 TH TERRACE
POMPANO BEACH, FL. 33064
1-800-813-1822

DEC 07 2006

ENGINEER SEAL
JOHN D. BUEROSSE
P.E.0050867

PRODUCT CONTROL DIVISION:

PRODUCT RENEWED as complying with the Florida Building Code
Acceptance No 06-1026.06
Expiration Date Dec 04, 2011
By Ishag I. Chande
Miami Dade Product Control Division

DATE: 10/16/06	DRAWN BY: E. TODZEY
SCALE : 1:2	SHEET: 5 OF 8
DWG:06-N/01	

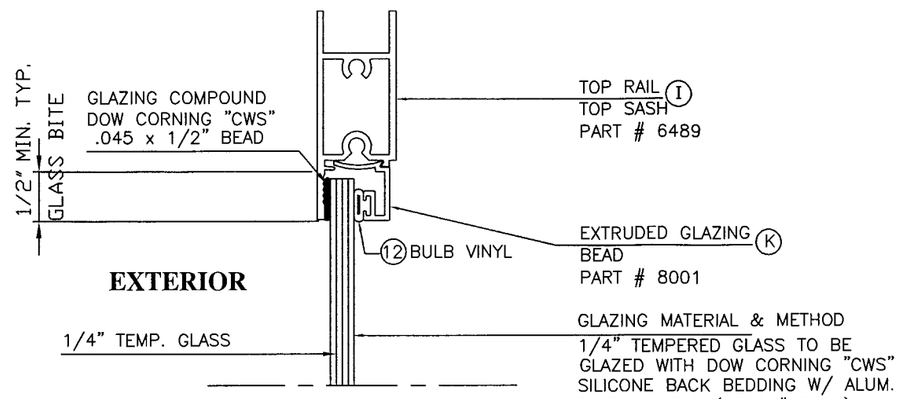

TYPICAL GLAZING DETAIL
SERIES # 5500-4 DOUBLE HUNG WINDOW

1/4" TEMPERED GLASS MEETS OR EXCEEDS ALLOWABLE DESIGN PRESSURES PER ASTM- E1300- 1998 & 2002.

BILL OF MATERIAL - EXTRUSIONS

ALUM. ALLOY & TEMPER 6063-T6 (EXCEPT AS NOTED)

MARK	PART #	QTY	DESCRIPTION	TYP. WALL THICKNESS	
(A)	8039	2 EA	MAIN FRAME JAMB -RH/LH	.078	
(B)	1237	1 EA	MAIN FRAME HEAD	.078	6063-T5
(C)	1238	1 EA	MAIN FRAME SILL	.078	
(D)	1257	4 EA	SASH JAMBS RH/LH	.064	
(E)	1324	1 EA	HEAD DRIP	.064	
(F)	1327	1 EA	SILL FLANGE	.062	
(G)	6098	1 EA	BOTTOM SASH RAIL -SILL	.093	
(H)	6099	1 EA	BOTTOM SASH RAIL -MEETING	.078	6063-T5
(I)	6489	1 EA	TOP SASH RAIL -HEAD	.080	
(J)	6490	1 EA	TOP SASH RAIL -MEETING	.078	6063-T5
(K)	8001	8 EA	GLAZING BEAD -ALL SASH	.050	
(L)	8532	48 EA	STD. ALUMINUM LOUVER CLIP	.050	
(M)	8050	24 EA	ALUMINUM LOUVER BLADE	.060	
(N)	A-1-156	2 EA	OPERATOR STRAP-1/8"x3/4"	ALUM. BAR	
(P)	8056	1 EA	MATING END CAP	.050	
(S)	8048	4 EA	SILL ANCHOR CLIP (2" WIDE)	.080	
(T)	-	3 EA	CHAN. CLIP-1/4"x1 3/4"	.078	

HARDWARE & FASTENERS

MARK	PART #	QTY	DESCRIPTION	MANUFACTURE
(1)	-	28 EA	10x1 PN PH SMS S/S -12/FRAME & 16/SASHES	-
(2)	-	48 EA	10x2 HEX HD SMS S/S -LOUVER BLADE TO FR JAMB	-
(3)	8772	48 EA	ALUM. SHOULDER RIVET -LV CLIP/OPER STRAP	UNIVERSAL RIVET
(4)	-	2 EA	OPERATOR COVER PLATE -.040 ALUM.	-
(5)	-	6 EA	10x1/2 PN PH SMS S/S -4/OPER & 2/SWEEP	-
(6)	-		OMITTED PART	-
(7)	292-001	1 EA	WHITE BRZ SWEEP LOCKS -1/BOTTOM SASH	BRONZE CRAFT
(8)	8513	1 EA	ROTO GEAR OPERATOR	SOUTHERN DIE
(9)	8552	12 FT	STAINLESS STEEL JAMB WST'P	
(10)	8553	96 FT	BULB VINYL LOUVER WST'P	PROTOTYPE PLASTIC
(11)	8554	8 FT	BULB VINYL HEAD & SILL WST'P	PROTOTYPE PLASTIC
(12)	8555	30 FT	BULB VINYL GLAZING BEAD	PROTOTYPE PLASTIC
(13)	8962	28 FT	"FIN SEAL" SASH JAMB WST'P -EACH JAMB	ULTRA FAB
(14)	9114	4 EA	# 40-5 TAKE OUT SASH BALANCES -2/SASH	CALDWELL
(15)	-	6 EA	1/4-20x3/4 TRUSS PHIL MS -FR JB/FR JB	-
(16)	-	6 EA	1/4-20 HEX NUT -FR JB/FR JB	-
(17)	-	1 EA	1/8x3/8 FOAM WST'P - BOTTOM VENT	-
(18)	-	2 EA	1/4x1/4x5/8 LONG FOAM WST'T- T & B VENT JB'S	-

SUPERIOR WINDOW CORP.
9875 N.W. 79TH AVENUE
HIALEAH GARDENS, FL. 33016
(305) 826-4800
FAX - (305) 826-7499
WWW.SUPERIORWINDOW.COM
E-MAIL: EDITH@SUPERIORWINDOW.COM

SERIES # 5500 ALUMINUM DOUBLE HUNG W/ IMPACT LOUVERS
WINDOW SIZE 48" X 86"

REVISIONS

No.	DESCRIPTION	DATE

JOHN D. BUEROSSE
P.E.0050867
3450 N.E. 6 TH TERRACE
POMPANO BEACH, FL. 33064
1-800-813-1822

DEC 07 2006
ENGINEER SEAL
JOHN D. BUEROSSE
P.E.0050867

PRODUCT CONTROL DIVISION:

PRODUCT RENEWED
as complying with the Florida Buiding Code
Acceptance No 06-1026.06
Expiration Date DEC 04, 2011
By [illegible]
Miami Dade Product [redacted] Division

DATE: 10/16/06	DRAWN BY: E. TODZEY
SCALE : NONE	SHEET: 6 OF 8
DWG: 06-N/01	

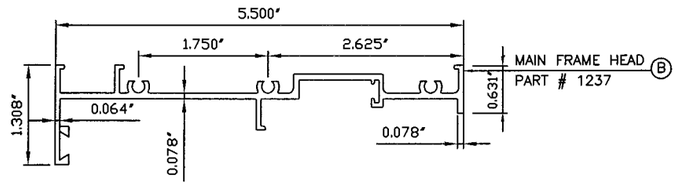

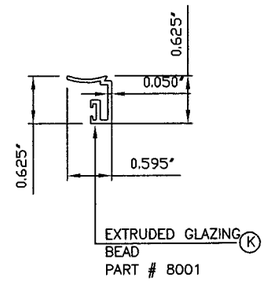

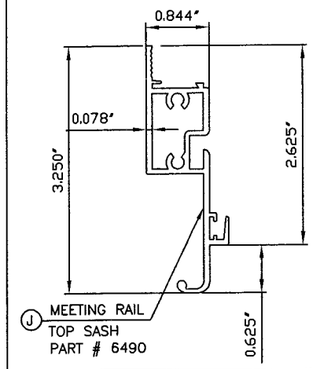

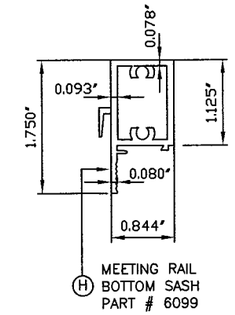

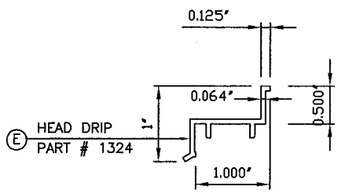

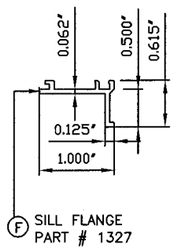

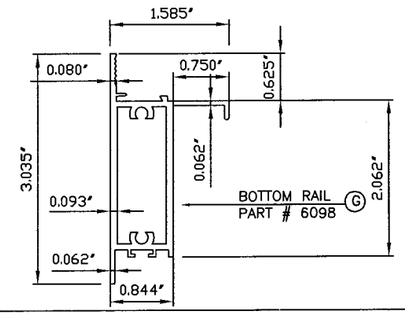

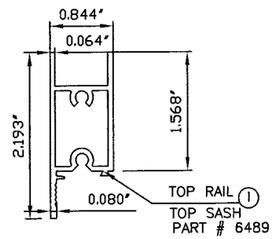

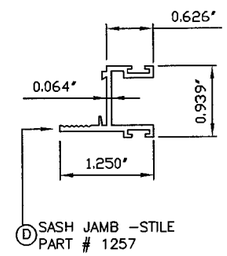

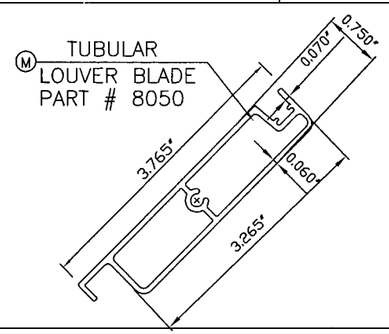

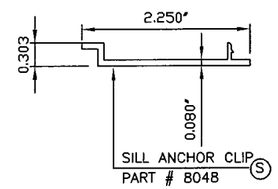

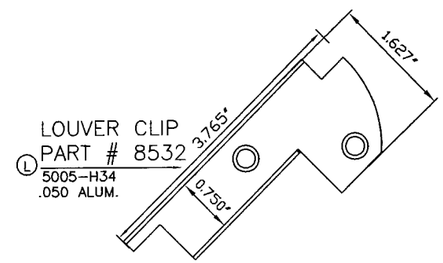

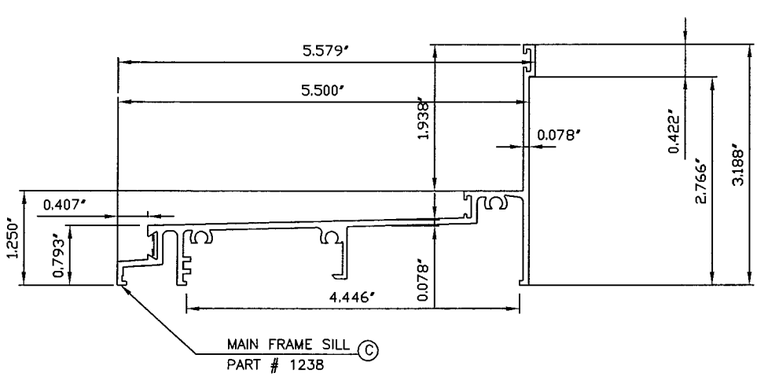

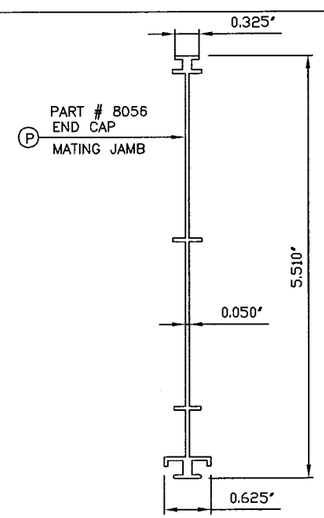

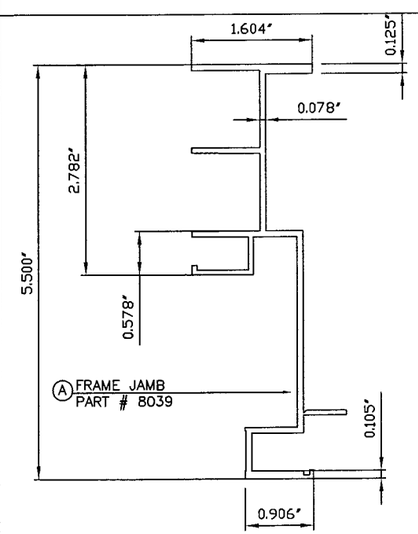

SUPERIOR WINDOW CORP.

9875 N.W. 79TH AVENUE
HIALEAH GARDENS, FL. 33016
(305) 826–4800
FAX – (305) 826–7499
WWW.SUPERIORWINDOW.COM
E–MAIL: EDITH@SUPERIORWINDOW.COM

SERIES # 5500 ALUMINUM DOUBLE HUNG W/ IMPACT LOUVERS

WINDOW SIZE 48" X 86"

REVISIONS

No.	*DESCRIPTION*	*DATE*

JOHN D. BUEROSSE
P.E.0050867
3450 N.E. 6 TH TERRACE
POMPANO BEACH, FL. 33064
1-800-813-1822

DEC 07 2006

ENGINEER SEAL
JOHN D. BUEROSSE
P.E.0050867

PRODUCT CONTROL DIVISION:

PRODUCT RENEWED
as complying with the Florida Building Code
Acceptance No 06-1026.06
Expiration Date DEC 04 2011
By Ishaq I. Chanda
Miami Dade Product Control Division

DATE: 10/16/06	*DRAWN BY:* E. TODZEY
SCALE :1:2	*SHEET:* 7 OF 8
*DWG:*06–N/01	

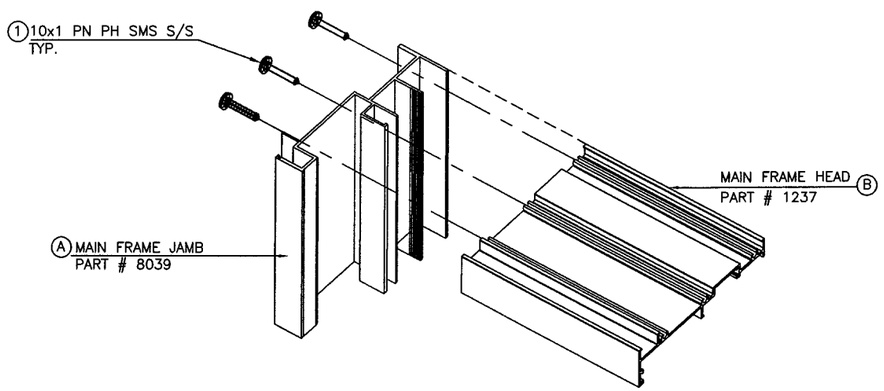

FRAME ASSEMBLY

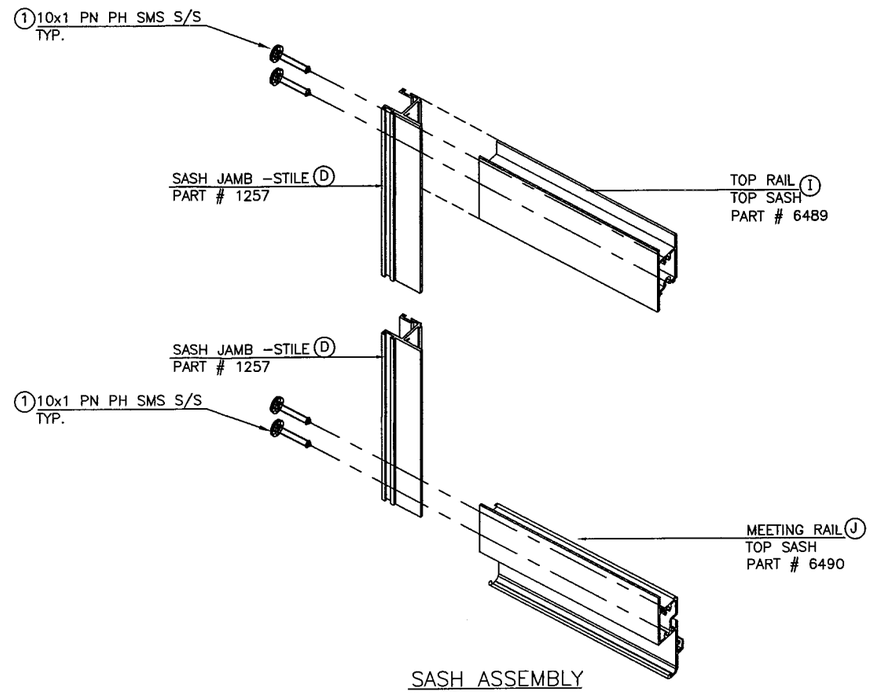

SASH ASSEMBLY
UPPER

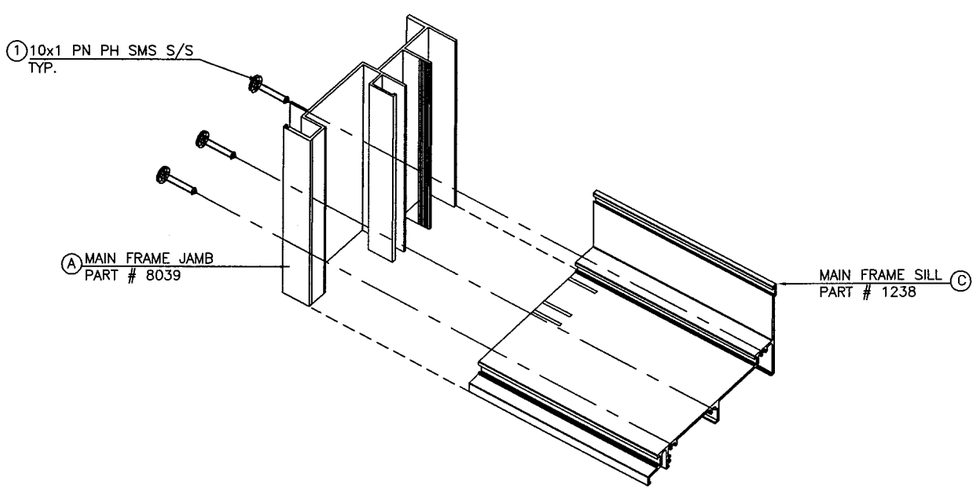

FRAME ASSEMBLY

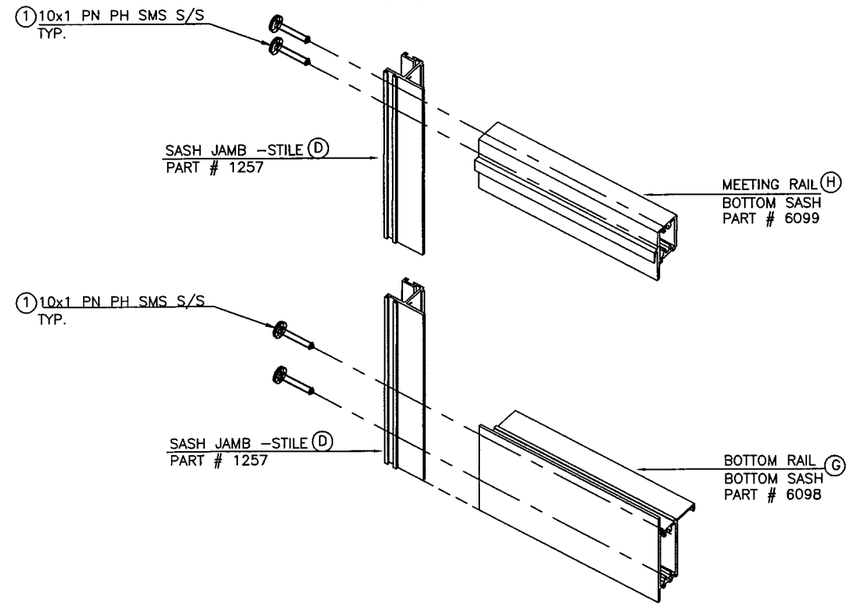

SASH ASSEMBLY
LOWER

SUPERIOR WINDOW CORP.

9875 N.W. 79TH AVENUE
HIALEAH GARDENS, FL. 33016
(305) 826-4800
FAX - (305) 826-7499
WWW.SUPERIORWINDOW.COM
E-MAIL: EDITH@SUPERIORWINDOW.COM

SERIES # 5500 ALUMINUM DOUBLE HUNG W/ IMPACT LOUVERS

WINDOW SIZE 48" X 86"

REVISIONS

No.	*DESCRIPTION*	*DATE*

JOHN D. BUEROSSE
P.E.0050867
3450 N.E. 6 TH TERRACE
POMPANO BEACH, FL. 33064
1-800-813-1822

DEC 07 2006

ENGINEER SEAL
JOHN D. BUEROSSE
P.E.0050867

PRODUCT CONTROL DIVISION:

PRODUCT RENEWED
as complying with the Florida Building Code
Acceptance No 06-1026.06
Expiration Date DEC 04 2011
By Isheng L. Chang
Miami Dade Product Control Division

DATE: 10/16/06	*DRAWN BY:* E. TODZEY
SCALE : NONE	*SHEET:* 8 OF 8
DWG: 06-N/01	