MIAMI-DADE COUNTY

BUILDING CODE COMPLIANCE OFFICE (BCCO)
PRODUCT CONTROL DIVISION

MIAMI-DADE COUNTY, FLORIDA
METRO-DADE FLAGLER BUILDING
140 WEST FLAGLER STREET, SUITE 1603
MIAMI, FLORIDA 33130-1563
(305) 375-2901 FAX (305) 375-2908
www.buldingcodeonline.com

NOTICE OF ACCEPTANCE (NOA)

Hartman Windows and Doors, LLC.
531 Southern Blvd.
West Palm Beach, FL 3405

SCOPE:

This NOA is being issued under the applicable rules and regulations governing the use of construction materials. The documentation submitted has been reviewed by Miami-Dade County Product Control Division and accepted by the Board of Rules and Appeals (BORA) to be used in Miami Dade County and other areas where allowed by the Authority Having Jurisdiction (AHJ).

This NOA shall not be valid after the expiration date stated below. The Miami-Dade County Product Control Division (In Miami Dade County) and/or the AHJ (in areas other than Miami Dade County) reserve the right to have this product or material tested for quality assurance purposes. If this product or material fails to perform in the accepted manner, the manufacturer will incur the expense of such testing and the AHJ may immediately revoke, modify, or suspend the use of such product or material within their jurisdiction. BORA reserves the right to revoke this acceptance, if it is determined by Miami-Dade County Product Control Division that this product or material fails to meet the requirements of the applicable building code.

This product is approved as described herein, and has been designed to comply with the Florida Building Code, including the High Velocity Hurricane Zone.

DESCRIPTION: Series "European Tilt & Turn" Outswing Mahogany Casement Window – L.M.I.

APPROVAL DOCUMENT: Drawing No. **06-HWD-0008**, titled "European Series" Mahogany Tilt & Turn Outswing Casement Window sheets 1 through 19 of 19, dated 10/18/06 with revision B dated 03/14/07, prepared by Engineering Express, signed and sealed by Frank L. Bennardo, P.E., bearing the Miami-Dade County Product Control Approval stamp with the Notice of Acceptance number and expiration date by the Miami-Dade County Product Control Division.

MISSILE IMPACT RATING: Large and Small Missile Impact Resistant

LABELING: Each unit shall bear a permanent label with the manufacturer's name or logo, city, state and following statement: "Miami-Dade County Product Control Approved", unless otherwise noted herein.

Approval of this NOA shall be considered after a approval application has been filed and there has been no change in the applicable building code negatively affecting the performance of this product.

TERMINATION of this NOA will occur after the expiration date or if there has been a revision or change in the materials, use, and/or manufacture of the product or process. Misuse of this NOA as an endorsement of any product, for sales, advertising or any other purposes shall automatically terminate this NOA. Failure to comply with any section of this NOA shall be cause for termination and removal of NOA.

ADVERTISEMENT: The NOA number preceded by the words Miami-Dade County, Florida, and followed by the expiration date may be displayed in advertising literature. If any portion of the NOA is displayed, then it shall be done in its entirety.

INSPECTION: A copy of this entire NOA shall be provided to the user by the manufacturer or its distributors and shall be available for inspection at the job site at the request of the Building Official.

This NOA consists of this page 1 and evidence page E-1, as well as approval document mentioned above.

The submitted documentation was reviewed by **Jaime D. Gascon, P.E.**

PRODUCT CONTROL ACCEPTED

J. Gascon
3/22/07

Hartman Windows and Doors, LLC.

NOTICE OF ACCEPTANCE: EVIDENCE SUBMITTED

A. DRAWINGS

1. Manufacturer's die drawings and sections.
2. Drawing No. **06-HWD-0008**, titled "European Series" Mahogany Tilt & Turn Outswing Casement Window sheets 1 through 19 of 19, dated 10/18/06 with revision B dated 03/14/07, prepared by Engineering Express, signed and sealed by Frank L. Bennardo, P.E.

B. TESTS

1. Test reports on 1) Air Infiltration Test, per FBC, TAS 202-94
   2) Uniform Static Air Pressure Test, Loading per FBC TAS 202-94
   3) Water Resistance Test, per FBC, TAS 202-94
   4) Large Missile Impact Test per FBC, TAS 201-94
   5) Cyclic Wind Pressure Loading per FBC, TAS 203-94
   6) Forced Entry Test, per FBC 2411 3.2.1, TAS 202-94

   along with marked-up drawings and installation diagram of **Series "European Tilt & Turn" Outswing Mahogany Casement Window – L.M.I.**, prepared by Hurricane Test Laboratory, Test Report No. HTL 0137-0714.05, dated 02/28/2006, signed and sealed by Vinu J. Abraham, P.E.

C. CALCULATIONS

1. Anchor verification calculations and structural analysis, complying with FBC-2004, prepared by Engineering Express, dated 03/14/07, signed and sealed by Frank L. Bennardo, P.E.
   Complies with ASTM E1300-98/02.

D. QUALITY ASSURANCE

1. Miami Dade Building Code Compliance Office (BCCO).

E. MATERIAL CERTIFICATIONS

1. Notice of Acceptance No. **01-0216.06**issued to Solutia Inc. for their "**Saflex IIIG"** dated 05/04/06, expiring on 05/21/11.
2. Notice of Acceptance No. **03-0415.13** issued to Solutia Inc. for their "**Vanceva Composites for lamination of glass**" dated 12/11/03, expiring on 12/11/08.

F. STATEMENTS

1. Statement letter of conformance, dated July 26, 2006, signed and sealed by Frank L. Bennardo, P.E.
2. Statement letter of no financial interest, dated July 26, 2006, signed and sealed by Frank L. Bennardo, P.E.
3. Laboratory compliance letter for Test reference no. HTL- 05032, issued by Hurricane Test Laboratory, Inc., dated February 27, 2006, signed and sealed by Vinu J. Abraham, P.E.

G. OTHER

N/A

Jaime D. Gascon, P.E.
Chief, Product Control Division
NOA No 06-1030.05
Expiration Date: April 12, 2012
Approval Date: April 12, 2007

EUROPEAN SERIES
MAHOGANY OUTSWING CASEMENT WINDOWS

LARGE MISSILE IMPACT RESISTANT

GENERAL NOTES

1. THE SYSTEM DESCRIBED HEREIN HAS BEEN DESIGNED AND TESTED IN ACCORDANCE WITH THE 2004 FLORIDA BUILDING CODE, FOR USE WITHIN THE HIGH VELOCITY HURRICANE ZONE, PER TAS 201 / 202 / 203 & ASTM E1300-98 STANDARDS.
2. NO 33-1/3% INCREASE IN ALLOWABLE STRESS HAS BEEN USED IN THE DESIGN OF THIS SYSTEM. WIND LOAD DURATION FACTOR Cd=1.6 HAS BEEN USED FOR WOOD ANCHOR DESIGN.
3. POSITIVE AND NEGATIVE DESIGN PRESSURES CALCULATED FOR USE WITH THIS SYSTEM SHALL BE DETERMINED BY OTHERS ON A JOB-SPECIFIC BASIS IN ACCORDANCE WITH THE GOVERNING CODE.
4. MULTIPLE UNITS MUST BE INSTALLED USING MIAMI-DADE COUNTY BCCO-APPROVED STRUCTURAL MULLIONS.
5. THE SYSTEM DETAILED HEREIN IS GENERIC AND DOES NOT PROVIDE INFORMATION FOR A SPECIFIC SITE. FOR SITE CONDITIONS DIFFERENT FROM THE CONDITIONS DETAILED HEREIN, A LICENSED ENGINEER OR REGISTERED ARCHITECT SHALL PREPARE SITE SPECIFIC DOCUMENTS AND SUBMIT FOR A ONE-TIME NOTICE OF ACCEPTANCE FOR USE IN CONJUNCTION WITH THIS DOCUMENT.
6. PERMIT HOLDER SHALL VERIFY THE ADEQUACY OF THE EXISTING STRUCTURE TO WITHSTAND SUPERIMPOSED LOADS. WOOD BUCKS (BY OTHERS) SHALL BE ANCHORED PROPERLY TO TRANSFER LOADS TO THE EXISTING STRUCTURE.
7. UNITS GLAZED WITH 7/16" or 9/16" LAMINATED GLASS ARE LARGE MISSILE IMPACT RESISTANT AND DO NOT REQUIRE IMPACT RESISTANT SHUTTERS. LAMINATED GLAZING INTERLAYERS SHALL BE AS SPECIFIED IN THEIR RESPECTIVE CURRENT NOTICE OF ACCEPTANCE.
8. UNITS INSTALLED WITH SOLID WOOD PANELS OR PLYWOOD INFILLS ARE ALSO LARGE MISSILE IMPACT RESISTANT. SEE GLAZING SCHEDULE FOR GLAZING/INFILL SPECIFICATIONS.
9. EXTERIOR SEAM OF FRAME CORNERS SHALL BE SEALED WITH SILICONE.
10. ALL STEEL IN CONTACT WITH ALUMINUM SHALL BE PAINTED OR PLATED.

GLAZING/INFILL SCHEDULE:

REFER TO GLAZING DETAILS BELOW FOR DEPICTION OF EACH GLAZING/INFILL TYPE

A	**7/16" SAFLEX:** 3/16" ANN - 0.090" SOLUTIA SAFLEX IIIG PVB - 3/16" ANN
B	**9/16" VANCEVA:** 1/4" ANN - 0.075" SOLUTIA VANCEVA - 1/4" ANN
C	**1 1/4" VANCEVA INSULATED:** 3/16" ANN - 0.075" SOLUTIA VANCEVA - 3/16" ANN + 1/2" AIR GAP + 3/16" TEMP
D	**1 3/4" MAHOGANY PANEL:** RAISED MAHOGANY WOOD PANEL
E	**3/4" MAHOGANY PLYWOOD:** MARINE-GRADE MAHOGANY PLYWOOD

NOTE: ALLOWABLE PRESSURES MAY VARY BASED ON GLAZING/INFILL TYPE FOR EACH CONFIGURATION SHOWN HEREIN. SEE APPROPRIATE CONFIGURATION ELEVATION FOR ALLOWABLE PRESSURE SCHEDULE.

ANCHOR SCHEDULE:

TO HOLLOW BLOCK OR CONCRETE:
- 1/4" TAPCONS (ELCO OR ITW) THRU 1x WOOD BUCKS OR DIRECTLY INTO CONC (MIN 3.0 KSI) OR MASONRY (MIN 1.5 KSI)WITH 1-3/4" MIN EMBED.

TO WOOD BUCK OR HOST STRUCTURE:
- #12 WOOD SCREWS WITH 1-1/2" MIN THREAD PENETRATION.
- (2) #10 WOOD SCREWS WITH 1-1/2" MIN THREAD PENETRATION.

ANCHOR NOTES:

1. SEE ANCHORAGE DIAGRAMS FOR ANCHOR LOCATIONS AND/OR SPACING.
2. ANCHORS SHALL BE INSTALLED IN ACCORDANCE WITH MANUFACTURERS' MOST CURRENT RECOMMENDATIONS.
3. TAPCONS MAY BE MANUFACTURED BY ELCO OR ITW.
4. ENSURE MINIMUM 2-1/2" EDGE DISTANCE FOR ALL ANCHORS TO CONCRETE.
5. FOR ANCHORS TO WOOD FRAMING, 7/8" MIN EDGE DISTANCE SHALL BE MAINTAINED. WOOD HOST STRUCTURE SHALL BE "SOUTHERN PINE" G=0.55 OR GREATER DENSITY.
6. MINIMUM EMBEDMENT SHALL BE AS NOTED IN ANCHOR SCHEDULE. MINIMUM EMBEDMENT AND EDGE DISTANCE EXCLUDES STUCCO, FOAM, BRICK, AND OTHER WALL FINISHES.
7. WHERE EXISTING STRUCTURE IS WOOD FRAMING, EXISTING CONDITIONS MAY VARY. FIELD VERIFY THAT FASTENERS ARE INTO ADEQUATE WOOD FRAMING MEMBERS, NOT INTO PLYWOOD.
8. WOOD BUCKS (BY OTHERS) SHALL BE ANCHORED PROPERLY TO TRANSFER LOADS TO THE EXISTING STRUCTURE.

GLAZING DETAILS

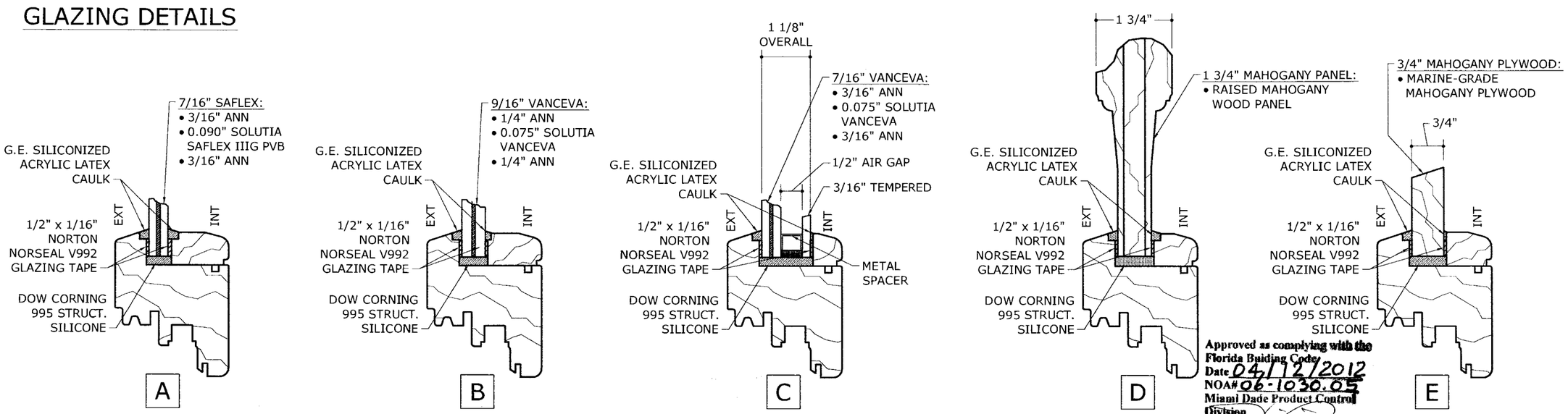

Approved as complying with the Florida Building Code
Date 04/12/2012
NOA# 06-1030.05
Miami Dade Product Control Division
By

FRANK L. BENNARDO, P.E.
PE0046349
03/21/2007

ENGINEERING EXPRESS®
160 SW 12th AVENUE, #106
DEERFIELD BEACH, FL 33442
PH: (954) 354-0660 FAX: (954) 354-0443
WWW.ENGEXP.COM
CERT OF AUTH #9885
A. FRANK L. BENNARDO, P.E., INC. INNOVATION

HARTMAN WINDOWS & DOORS, LLC
531 SOUTHERN BOULEVARD
WEST PALM BEACH, FL 33405

'EUROPEAN SERIES' MAHOGANY OUTSWING CASEMENT WINDOWS
LARGE MISSILE IMPACT RESISTANT

REMARKS	DRWN	CHKD	DATE
INITIAL ISSUE	CL	FLB	10/18/06
BCCO COMMENTS	CL	FLB	1/27/07
BCCO COMMENTS	CL	FLB	3/14/07
-	-	-	-
-	-	-	-

06-HWD-0008
SCALE: - 01
PAGE DESCRIPTION:
-
-

19

1

03/21/2007 - 11:46am clangley F:\01 Project Files\Hartman Windows & Doors (HWD)\2006 Jobs\06-HWD-0008 European Casement Window, Outswing, LMI (NOA)\06-HWD-0008_001 European Casement, Outswing, LMI (NOA).dwg

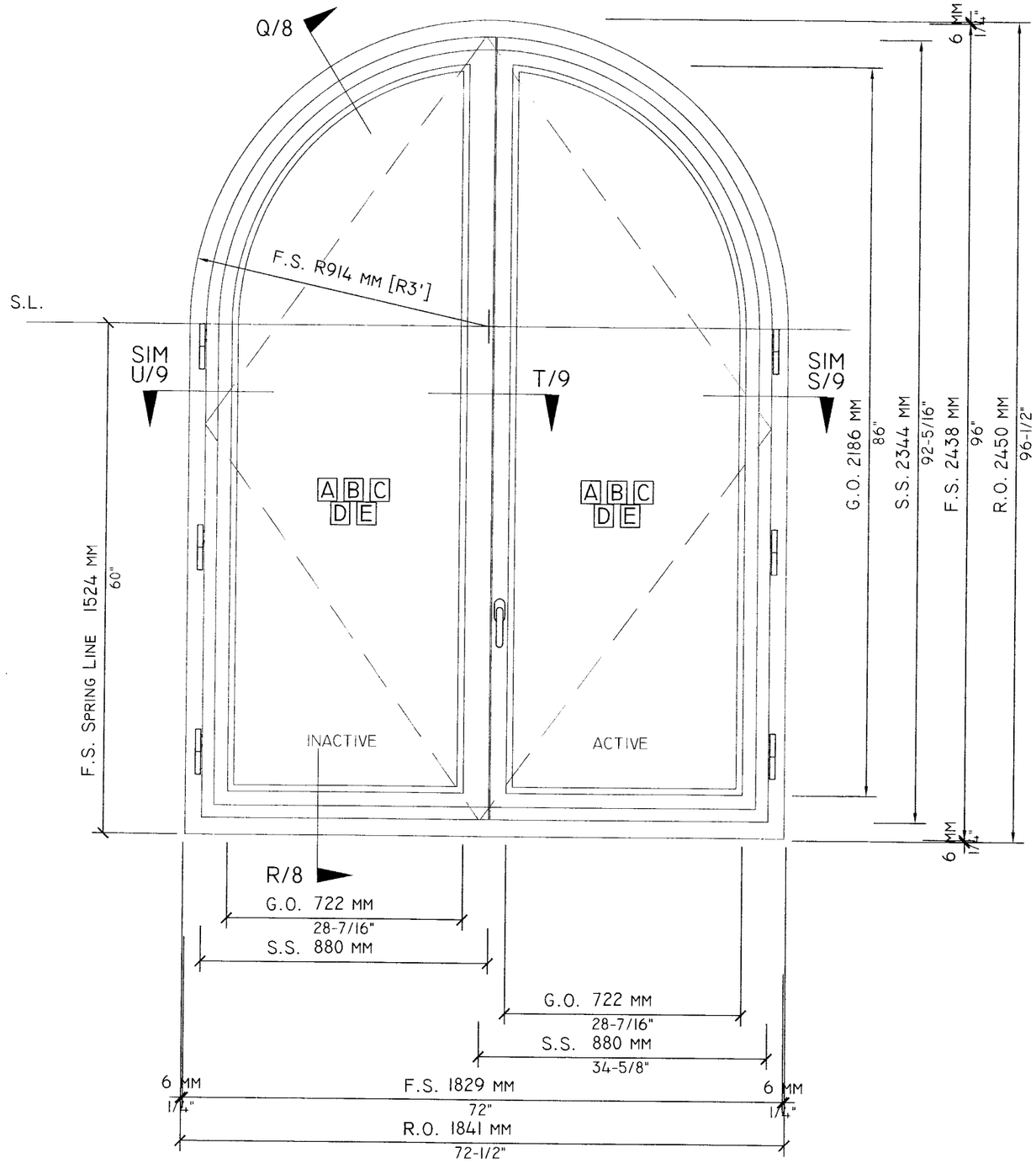

EUROPEAN OUTSWING CASEMENT

MAHOGANY OUTSWING FRENCH CASEMENT WINDOW

ALLOWABLE PRESSURE SCHEDULE

GLAZING / INFILL TYPE	ALLOWABLE PRESSURES	
A	+ 60 PSF	- 70 PSF
B	+ 60 PSF	- 70 PSF
C	+ 60 PSF	- 70 PSF
D	+ 60 PSF	- 70 PSF
E	+ 60 PSF	- 70 PSF

Approved as complying with the Florida Buiding Code
Date 04/12/2012
NOA# 06-1030.05
Miami-Dade Product Control Division
By

FRANK L. BENNARDO, P.E.
PE0046549
03/21/2007

ENGINEERING EXPRESS®
160 SW 12th AVENUE, #106
DEERFIELD BEACH, FL 33442
PH: (954) 354-0660 FAX: (954) 354-0443
WWW.ENGEXP.COM
CERT OF AUTH #9885
A FRANK L. BENNARDO, P.E., INC. INNOVATION

HARTMAN WINDOWS & DOORS, LLC
531 SOUTHERN BOULEVARD
WEST PALM BEACH, FL 33405

'EUROPEAN SERIES' MAHOGANY
OUTSWING CASEMENT WINDOWS
LARGE MISSILE IMPACT RESISTANT

REMARKS	DRWN	CHKD	DATE
INITIAL ISSUE	CL	FLB	10/18/06
BCCO COMMENTS	CL	FLB	1/27/07
BCCO COMMENTS	CL	FLB	3/14/07
-	-	-	-
-	-	-	-

06-HWD-0008

SCALE: - 01

PAGE DESCRIPTION:
-
-

19

2

03/21/2007 - 11:46am clangley F:\01 Project Files\Hartman Windows & Doors (HWD)\2006 Jobs\06-HWD-0008 European Casement Window, Outswing, LMI (NOA)\06-HWD-0008_00f European Casement, Outswing, LMI (NOA).dwg

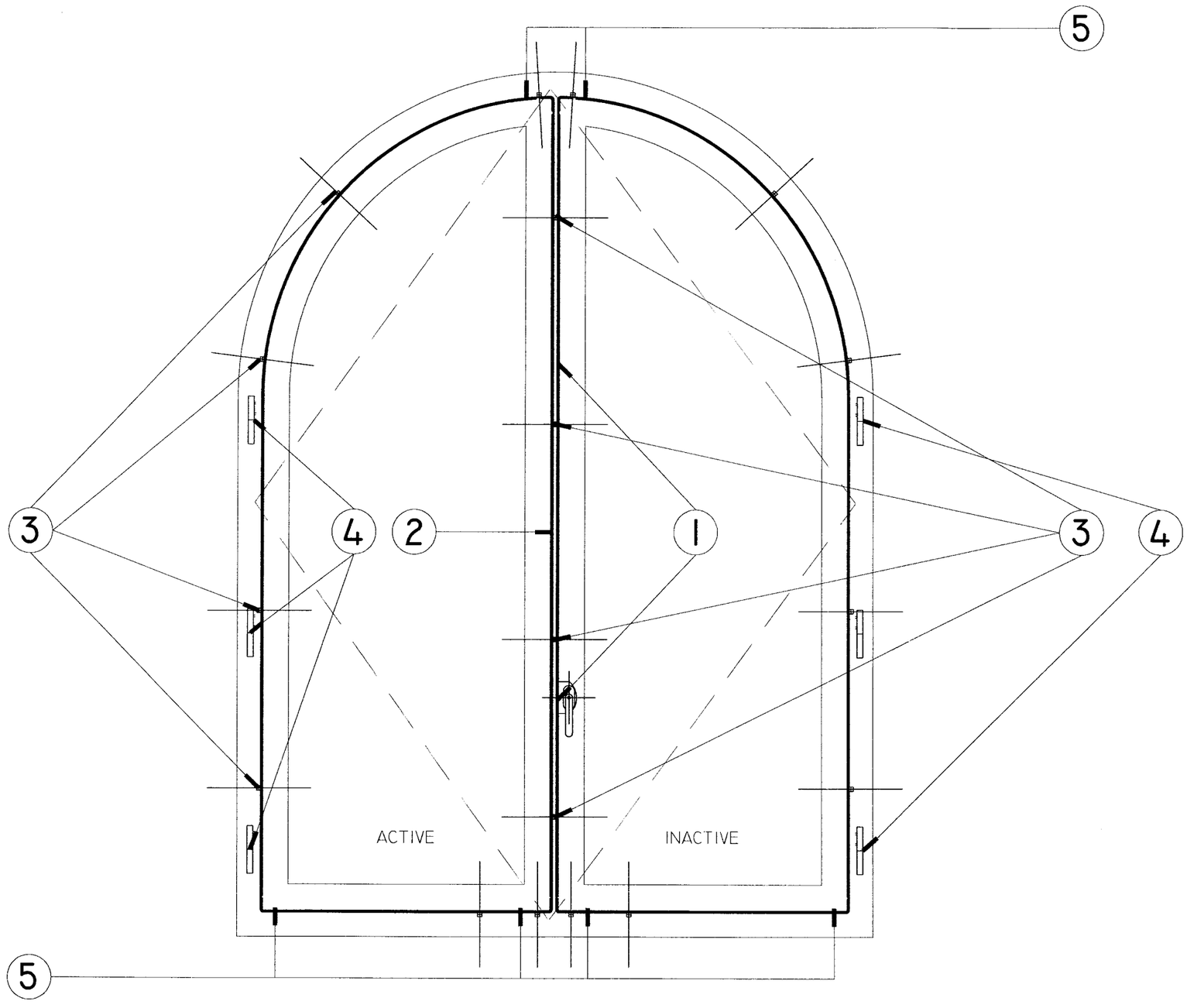

WINDOW CORNER CONSTRUCTION:

FRAME/FRAME: MULTI-FORK MORTISE AND TENON JOINERY SECURED WITH NATIONAL CASEINE OR TITE BOND WATERPROOF GLUE.

SASH/SASH:MULTI-FORK MORTISE AND TENON JOINERY SECURED WITH NATIONAL CASEINE OR TITE BOND WATERPROOF GLUE.

WINDOW HARDWARE SUPPLIERS:

TYPE 1 - G.U.
TYPE 2 - A.G.B.
TYPE 3 - SEGENIA
TYPE 4 - HOPPE

EUROPEAN OUTSWING CASEMENT HARDWARE LAYOUT

MAHOGANY OUTSWING FRENCH CASEMENT WINDOW

Approved as complying with the Florida Buidling Code
Date 04/12/2012
NOA# 06-1030.05
Miami Dade Product Control Division
By

FRANK L. BENNARDO, P.E.
PE0046549
03/21/2007

ENGINEERING EXPRESS®
160 SW 12th AVENUE, #106
DEERFIELD BEACH, FL 33442
PH: (954) 354-0660 FAX: (954) 354-0443
WWW.ENGEXP.COM
CERT OF AUTH #9885
A. FRANK L. BENNARDO, P.E., INC. INNOVATION

HARTMAN WINDOWS & DOORS, LLC
531 SOUTHERN BOULEVARD
WEST PALM BEACH, FL 33405

'EUROPEAN SERIES' MAHOGANY
OUTSWING CASEMENT WINDOWS
LARGE MISSILE IMPACT RESISTANT

REMARKS	DRWN	CHKD	DATE
INITIAL ISSUE	CL	FLB	10/18/06
BCCO COMMENTS	CL	FLB	1/27/07
BCCO COMMENTS	CL	FLB	3/14/07
-	-	-	-
-	-	-	-

06-HWD-0008
SCALE: - 01
PAGE DESCRIPTION:
-
-

19

3

03/21/2007 - 11:47am clangley F:\01 Project Files\Hartman Windows & Doors (HWD)\2006 Jobs\06-HWD-0008 European Casement Window, Outswing, LMI (NOA)\06-HWD-0008_001 European Casement, Outswing, LMI (NOA).dwg

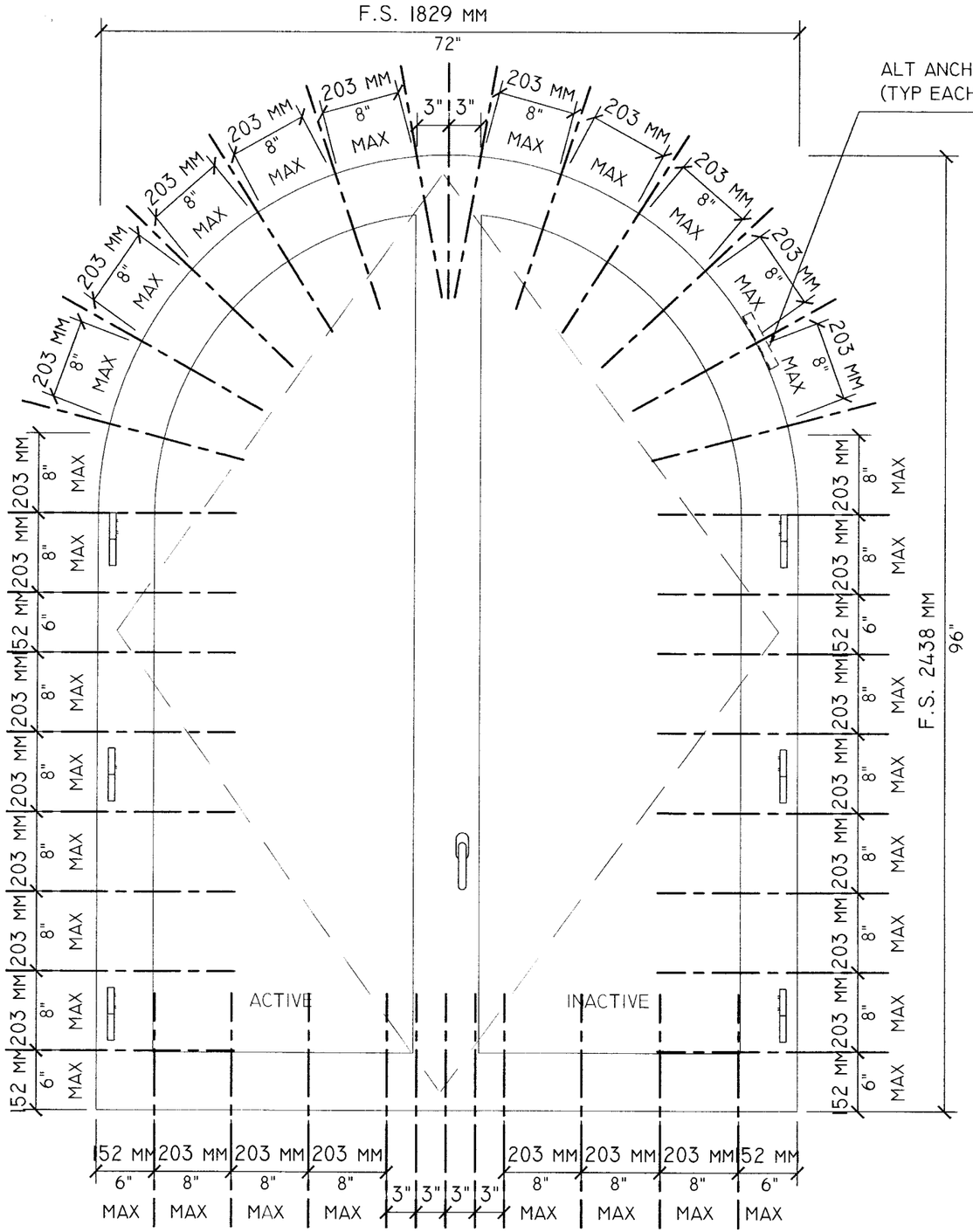

INSTALLATION DIAGRAM

MAHOGANY OUTSWING FRENCH CASEMENT WINDOW

ALTERNATE INSTALLATION METHODS:

1. PROVIDE (2) #10 X 1-¾" S.S. PAN HEAD SCREWS PER LOCATION INDICATED FOR WOOD SUBSTRATE. SCREW THROUGH STEEL CLIP INTO WOOD BUCK WITH MIN. PENETRATION 1½", SPACED AS INDICATED. SEE SECTION DETAILS FOR DETAILS.

2. PROVIDE (2) #10 X 2" S.S. PAN HEAD SCREWS PER LOCATION INDICATED FOR WOOD SUBSTRATE. SCREW THROUGH 1½" X 1½" X ⅛" ALUMINUM ANGLE INTO WOOD BUCK WITH MIN. 1¾" PENETRATION, SPACED AS INDICATED. SEE SECTION DETAILS FOR DETAILS.

3. PROVIDE (1) #12 X 3½" S.S. SCREW PER LOCATION INDICATED. SCREW THROUGH HOLES IN JAMB INTO WOOD BUCK SPACED AS INDICATED. SEE SECTION DETAILS FOR DETAILS.

NOTE: IF LESS THAN 2 X 6 BUCK IS USED AROUND OPENING, ¼" TAPCONS SHALL BE USED, RUNNING THROUGH THE JAMB, SHIM, BUCK, & INTO THE BLOCK / CONCRETE WITH MIN. EMBEDMENT 1¼".

Approved as complying with the Florida Building Code
Date 04/12/2012
NOA# 06-1030.05
Miami Dade Product Control Division
By

FRAME SCREW REQUIREMENTS			
FASTENER	SUBSTRATE	MIN. EMBED	MIN. EDGE DISTANCE
No. 10 x 1-3/4"	WOOD	1 1/2"	6"
No.12 x 3 1/2"	WOOD	1 3/8"	6"
1/4" x 3-1/2" TAPCON	BLOCK/CONCR.	1 1/4"	6"

FRANK L. BENNARDO, P.E.
PE0046549
03/21/2007

ENGINEERING EXPRESS®
160 SW 12th AVENUE, #106
DEERFIELD BEACH, FL 33442
PH: (954) 354-0660 FAX: (954) 354-0443
WWW.ENGEXP.COM
CERT OF AUTH #9885
A. FRANK L. BENNARDO, P.E., INC. INNOVATION

HARTMAN WINDOWS & DOORS, LLC
531 SOUTHERN BOULEVARD
WEST PALM BEACH, FL 33405

'EUROPEAN SERIES' MAHOGANY OUTSWING CASEMENT WINDOWS LARGE MISSILE IMPACT RESISTANT

REMARKS	DRWN	CHKD	DATE
INITIAL ISSUE	CL	FLB	10/18/06
BCCO COMMENTS	CL	FLB	1/27/07
BCCO COMMENTS	CL	FLB	3/14/07

06-HWD-0008
SCALE: - 01
PAGE DESCRIPTION:

03/21/2007 - 11:47am clangley F:\01 Project Files\Hartman Windows & Doors (HWD)\2006 Jobs\06-HWD-0008 European Casement Window, Outswing, LMI (NOA)\06-HWD-0008_001 European Casement, Outswing, LMI (NOA).dwg

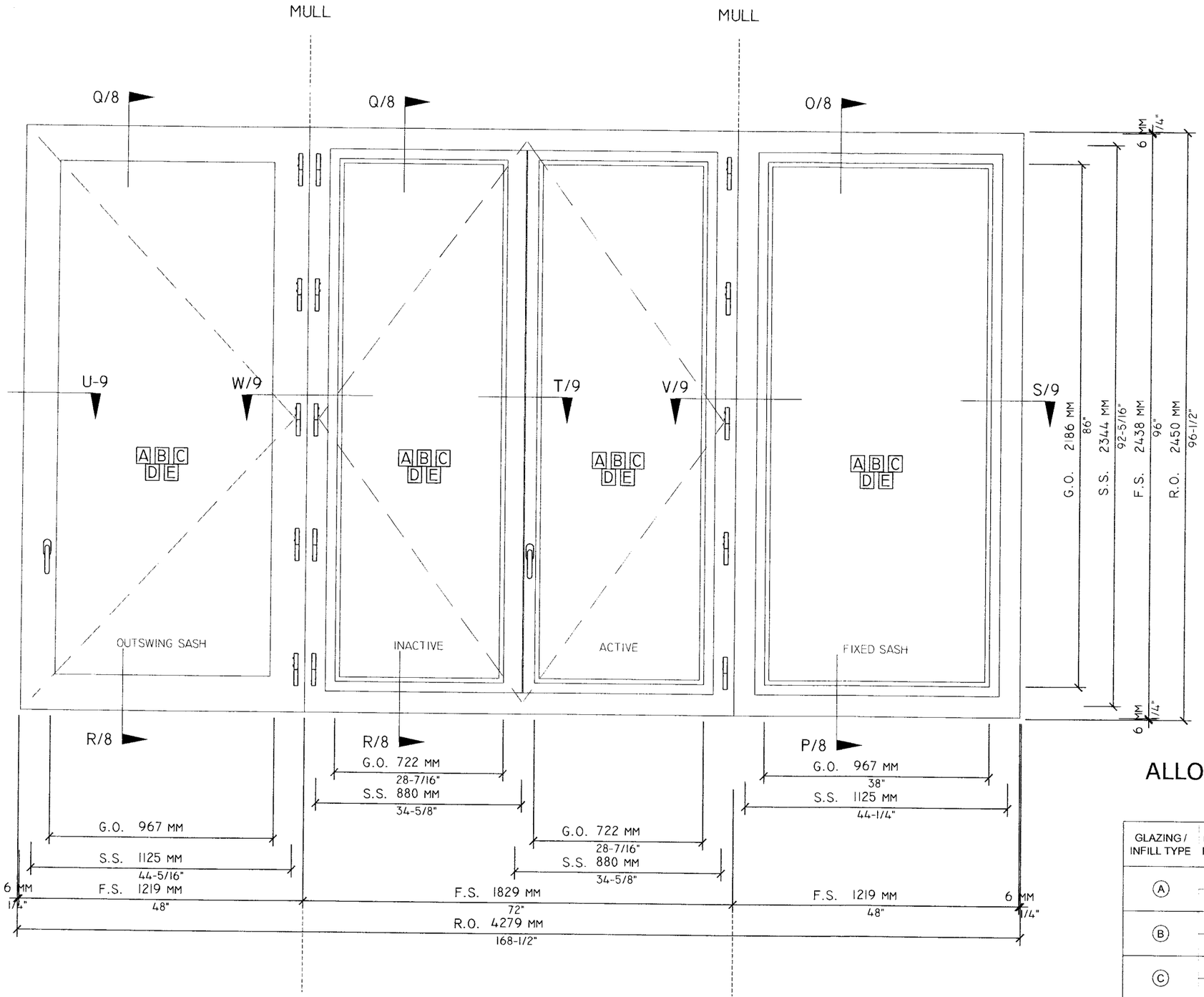

OUTSWING CASEMENT W/ FIXED & OPERABLE SIDELITE

MAHOGANY OUTSWING FRENCH CASEMENT WINDOW
WITH FIXED & OUTSWING CASEMENT SIDELITES

Approved as complying with the Florida Buiding Code
Date 04/12/2012
NOA# 06-1030.05
Miami Dade Product Control Division
By

ALLOWABLE PRESSURE SCHEDULE

GLAZING / INFILL TYPE	DOOR SASH / PANEL WIDTH	ALLOWABLE PRESSURES	
A	44-1/4"	+ 51.1 PSF	- 51.1 PSF
	34-5/8"	+ 60 PSF	- 70 PSF
B	44-1/4"	+ 60 PSF	- 70 PSF
	34-5/8"	+ 60 PSF	- 70 PSF
C	44-1/4"	+ 54.7 PSF	- 54.7 PSF
	34-5/8"	+ 60 PSF	- 70 PSF
D	44-1/4"	+ 60 PSF	- 70 PSF
	34-5/8"	+ 60 PSF	- 70 PSF
E	44-1/4"	+ 60 PSF	- 70 PSF
	34-5/8"	+ 60 PSF	- 70 PSF

FRANK L. BENNARDO, P.E.
PE0046549
03/21/2007

ENGINEERING EXPRESS®
160 SW 12th AVENUE, #106
DEERFIELD BEACH, FL 33442
Ph: (954) 354-0660 FAX: (954) 354-0443
WWW.ENGEXP.COM
CERT OF AUTH #8885
A FRANK L. BENNARDO, P.E., INC. INNOVATION

HARTMAN WINDOWS & DOORS, LLC
531 SOUTHERN BOULEVARD
WEST PALM BEACH, FL 33405

'EUROPEAN SERIES' MAHOGANY
OUTSWING CASEMENT WINDOWS
LARGE MISSILE IMPACT RESISTANT

REMARKS	DRWN	CHKD	DATE
INITIAL ISSUE	CL	FLB	10/18/06
BCCO COMMENTS	CL	FLB	1/27/07
BCCO COMMENTS	CL	FLB	3/14/07
-	-	-	-
-	-	-	-

06-HWD-0008
SCALE: - 01
PAGE DESCRIPTION:
-
-

19

5

03/21/2007 - 11:47am clangley F:\01 Project Files\Hartman Windows & Doors (HWD)\2006 Jobs\06-HWD-0008 European Casement Window, Outswing, LMI (NOA)\06-HWD-0008_00f European Casement, Outswing, LMI (NOA).dwg

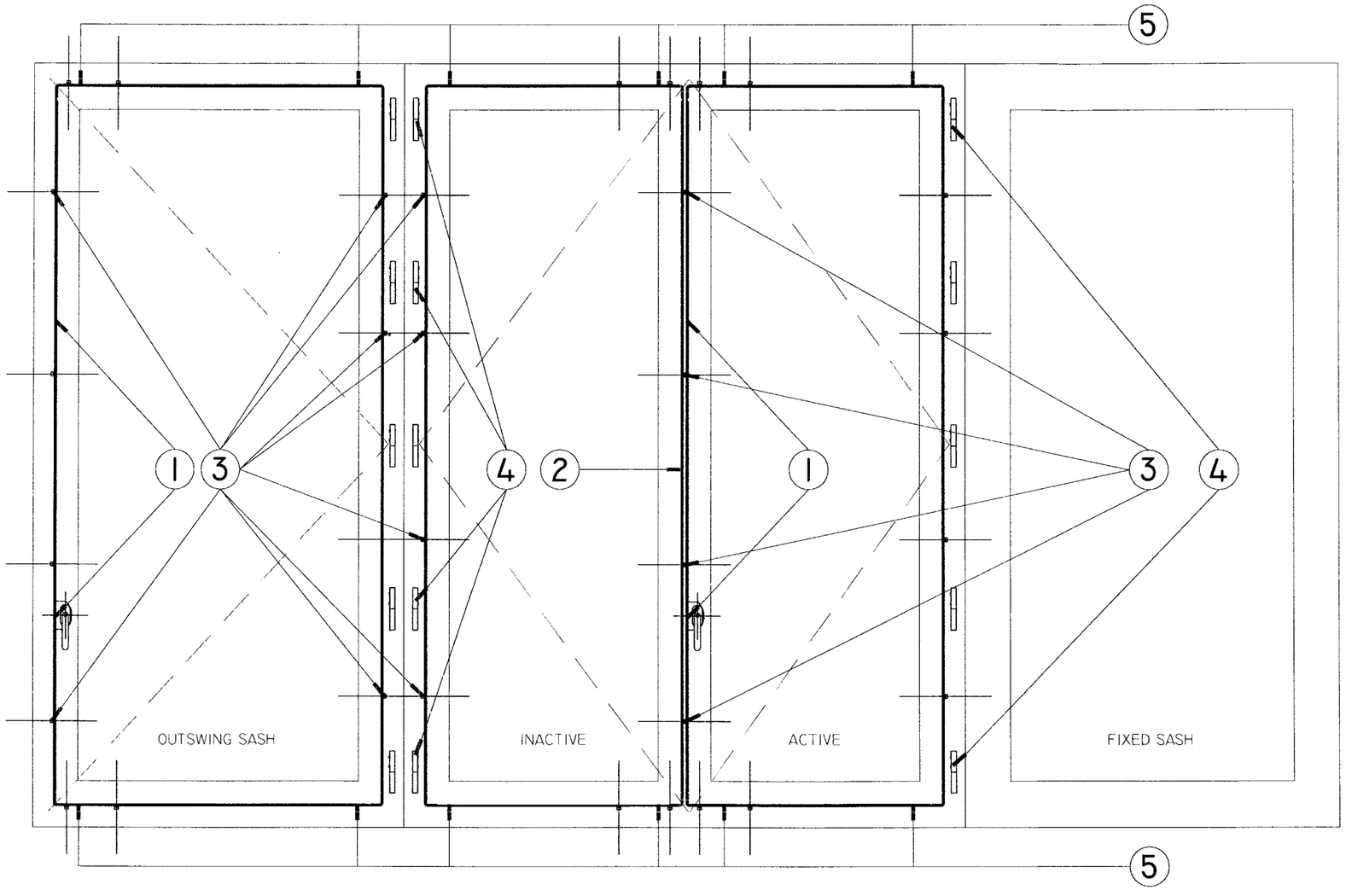

OUTSWING CASEMENT HARDWARE LAYOUT

MAHOGANY OUTSWING FRENCH CASEMENT WINDOW
WITH FIXED & OUTSWING CASEMENT SIDELITES

WINDOW CORNER CONSTRUCTION:

FRAME/SASH : MULTI-FORK MORTISE AND TENON JOINERY SECURED WITH NATIONAL CASEINE OR TITE BOND WATERPROOF GLUE.

WINDOW HARDWARE SUPPLIERS:

TYPE 1 - G.U.
TYPE 2 - A.G.B.
TYPE 3 - SEGENIA
TYPE 4 - HOPPE

Approved as complying with the Florida Buiding Code
Date 04/12/2012
NOA# 06-1030.05
Miami Dade Product Control Division
By

FRANK L. BENNARDO, P.E.
PE0046549
03/21/2007

ENGINEERING EXPRESS®
160 SW 12th AVENUE, #106
DEERFIELD BEACH, FL 33442
PH: (954) 354-0660 FAX: (954) 354-0443
WWW.ENGEXP.COM
CERT OF AUTH #9885
A. FRANK L. BENNARDO, P.E., INC. INNOVATION

HARTMAN WINDOWS & DOORS, LLC
531 SOUTHERN BOULEVARD
WEST PALM BEACH, FL 33405

'EUROPEAN SERIES' MAHOGANY
OUTSWING CASEMENT WINDOWS
LARGE MISSILE IMPACT RESISTANT

REMARKS	DRWN	CHKD	DATE
INITIAL ISSUE	CL	FLB	10/18/06
BCCO COMMENTS	CL	FLB	1/27/07
BCCO COMMENTS	CL	FLB	3/14/07
-	-	-	-
-	-	-	-

06-HWD-0008
SCALE: - 01
PAGE DESCRIPTION:
-
-

19

6

03/21/2007 - 11:47am clangley F:\01 Project Files\Hartman Windows & Doors (HWD)\2006 Jobs\06-HWD-0008 European Casement Window, Outswing, LMI (NOA)\06-HWD-0008_001 European Casement, Outswing, LMI (NOA).dwg

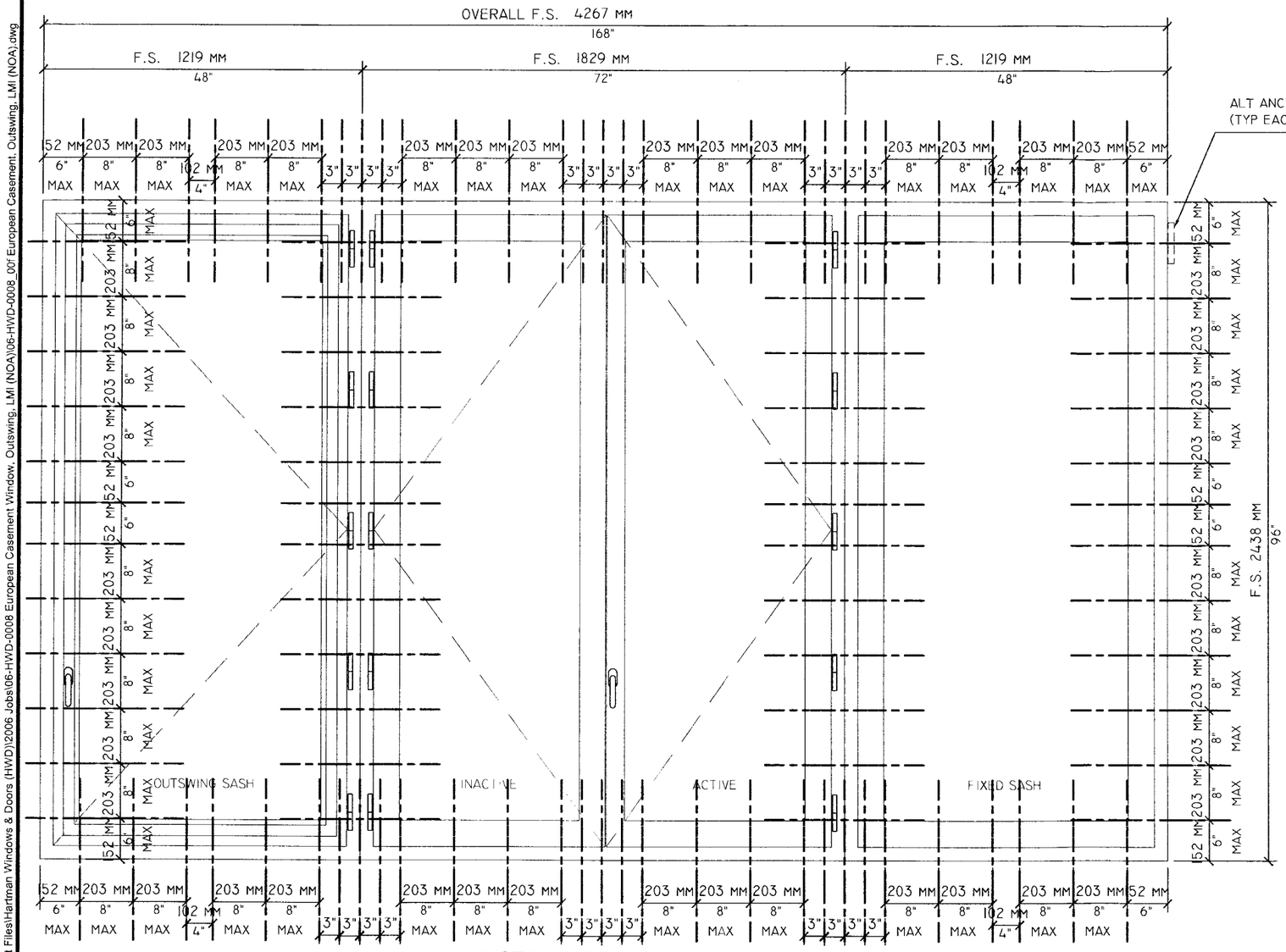

INSTALLATION DIAGRAM

MAHOGANY OUTSWING FRENCH CASEMENT WINDOW
WITH FIXED & OUTSWING CASEMENT SIDELITES

ALTERNATE INSTALLATION METHODS:

1. PROVIDE (2) #10 X 1-¾" S.S. PAN HEAD SCREWS PER LOCATION INDICATED FOR WOOD SUBSTRATE. SCREW THROUGH STEEL CLIP INTO WOOD BUCK WITH MIN. PENETRATION 1½", SPACED AS INDICATED. SEE SECTION DETAILS FOR DETAILS.

2. PROVIDE (2) #10 X 2" S.S. PAN HEAD SCREWS PER LOCATION INDICATED FOR WOOD SUBSTRATE. SCREW THROUGH 1½" X 1½" X ⅛" ALUMINUM ANGLE INTO WOOD BUCK WITH MIN. 1¾" PENETRATION, SPACED AS INDICATED. SEE SECTION DETAILS FOR DETAILS.

3. PROVIDE (1) #12 X 3½" S.S. SCREW PER LOCATION INDICATED. SCREW THROUGH HOLES IN JAMB INTO WOOD BUCK SPACED AS INDICATED. SEE SECTION DETAILS FOR DETAILS.

NOTE: IF LESS THAN 2 X 6 BUCK IS USED AROUND OPENING, ¼" TAPCONS SHALL BE USED, RUNNING THROUGH THE JAMB, SHIM, BUCK, & INTO THE BLOCK / CONCRETE WITH MIN. EMBEDMENT 1¼".

FRAME SCREW & STRAP REQUIREMENTS

FASTENER	SUBSTRATE	MIN. EMBED	MIN. EDGE DISTANCE
No. 10 x 1-3/4"	WOOD	1 1/2"	6"
No.12 x 3 1/2"	WOOD	1 3/8"	6"
1/4" x 3-1/2" TAPCON	BLOCK/CONCR.	1 1/4"	6"
16 GA 6" x 1-1/2" SS OR GALVANIZED STEEL STRAP	-----	-----	6"

Approved as complying with the Florida Building Code
Date 04/12/2012
NOA# 06-1030.05
Miami Dade Product Control Division
By

FRANK L. BENNARDO, P.E.
PE0046549
03/21/2007

ENGINEERING EXPRESS®
160 SW 12th AVENUE, #106
DEERFIELD BEACH, FL 33442
PH: (954) 354-0660 FAX: (954) 354-0443
WWW.ENGEXP.COM
CERT OF AUTH #9885
A FRANK L. BENNARDO, P.E., INC. INNOVATION

HARTMAN WINDOWS & DOORS, LLC
531 SOUTHERN BOULEVARD
WEST PALM BEACH, FL 33405

'EUROPEAN SERIES' MAHOGANY
OUTSWING CASEMENT WINDOWS
LARGE MISSILE IMPACT RESISTANT

REMARKS	DRWN	CHKD	DATE
INITIAL ISSUE	CL	FLB	10/18/06
BCCO COMMENTS	CL	FLB	1/27/07
BCCO COMMENTS	CL	FLB	3/14/07
-	-	-	-
-	-	-	-

06-HWD-0008
SCALE: - 01
PAGE DESCRIPTION:
-
-

F:\01 Project Files\Hartman Windows & Doors (HWD)\2006 Jobs\06-HWD-0008 European Casement Window, Outswing, LMI (NOA)\06-HWD-0008_001 European Casement, Outswing, LMI (NOA).dwg
03/21/2007 - 11:47am clangley

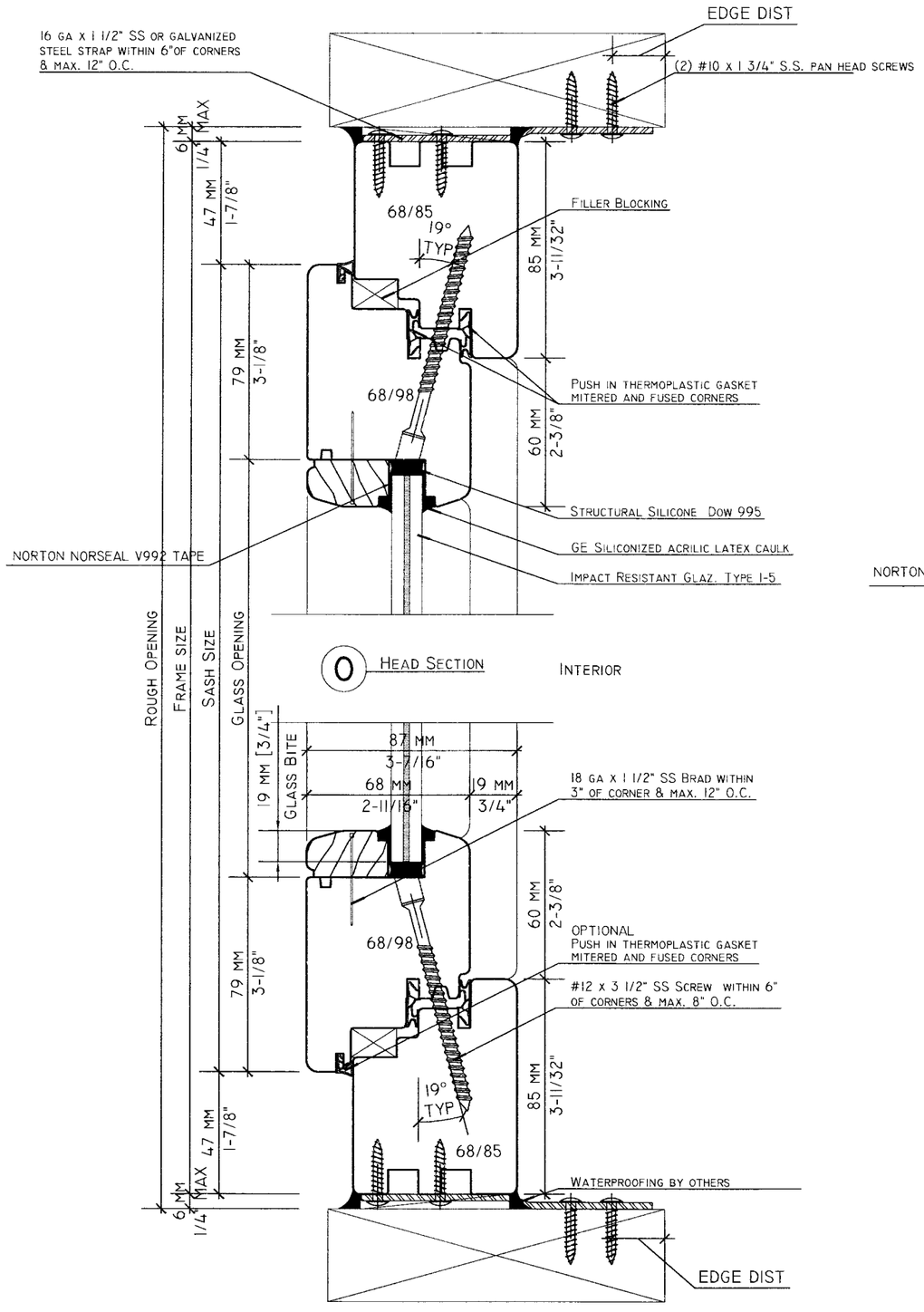

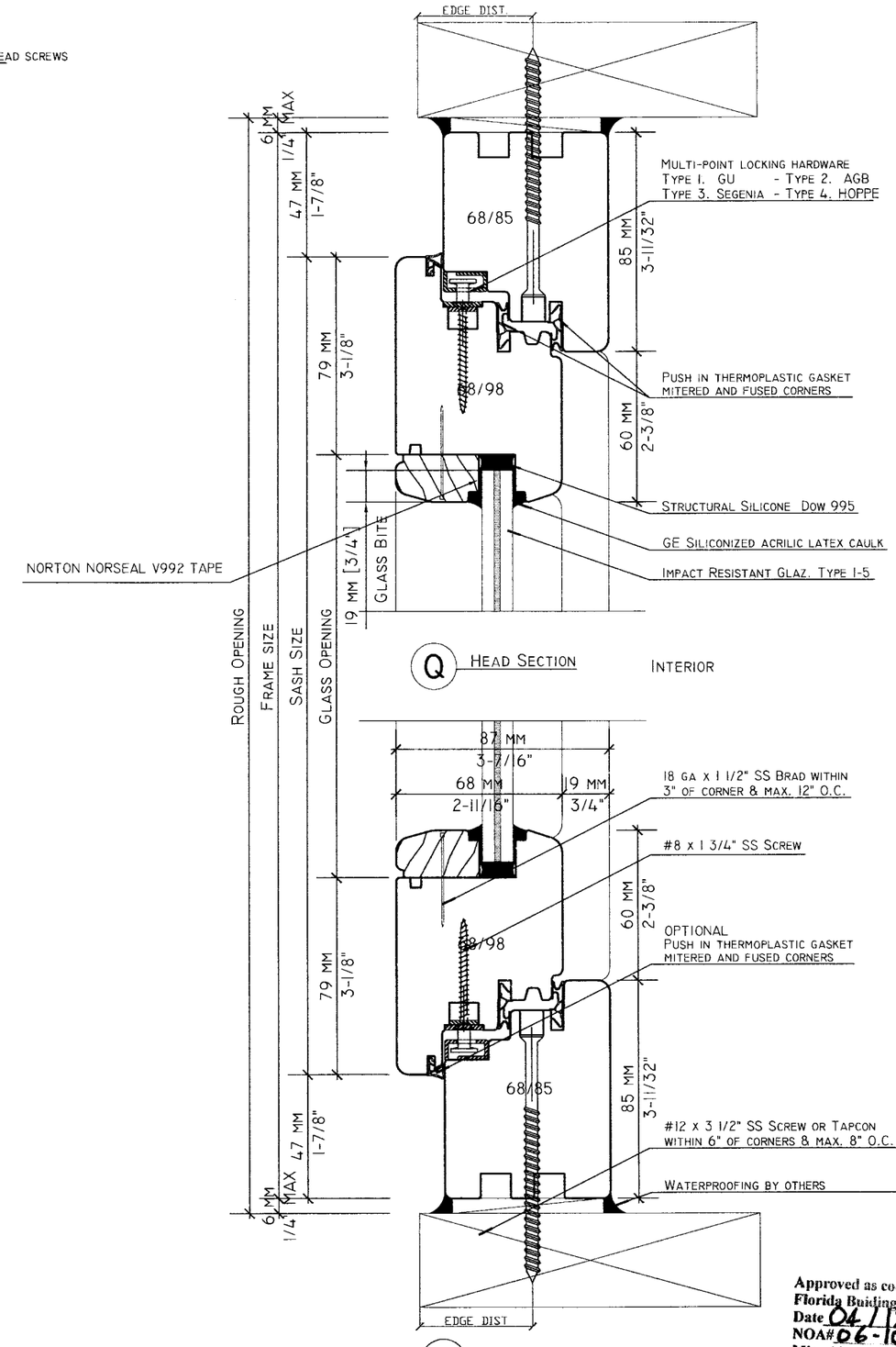

Approved as complying with the Florida Building Code
Date 04/12/2012
NOA# 06-1030.05
Miami Dade Product Control Division
By

FRANK L. BENNARDO, P.E.
PE0046549
03/21/2007

ENGINEERING EXPRESS®
160 SW 12th AVENUE, #106
DEERFIELD BEACH, FL 33442
PH: (954) 354-0660 FAX: (954) 354-0443
WWW.ENGEXP.COM
CERT OF AUTH #9885
A. FRANK L. BENNARDO, P.E., INC. INNOVATION

HARTMAN WINDOWS & DOORS, LLC
531 SOUTHERN BOULEVARD
WEST PALM BEACH, FL 33405

'EUROPEAN SERIES' MAHOGANY
OUTSWING CASEMENT WINDOWS
LARGE MISSILE IMPACT RESISTANT

REMARKS	DRWN	CHKD	DATE
INITIAL ISSUE	CL	FLB	10/18/06
BCCO COMMENTS	CL	FLB	1/27/07
BCCO COMMENTS	CL	FLB	3/14/07
-	-	-	-
-	-	-	-

06-HWD-0008
SCALE: - 01
PAGE DESCRIPTION:
-
-

19

8

03/21/2007 - 11:47am clangley F:\01 Project Files\Hartman Windows & Doors (HWD)\2006 Jobs\06-HWD-0008 European Casement Window, Outswing, LMI (NOA)\06-HWD-0008_001 European Casement, Outswing, LMI (NOA).dwg

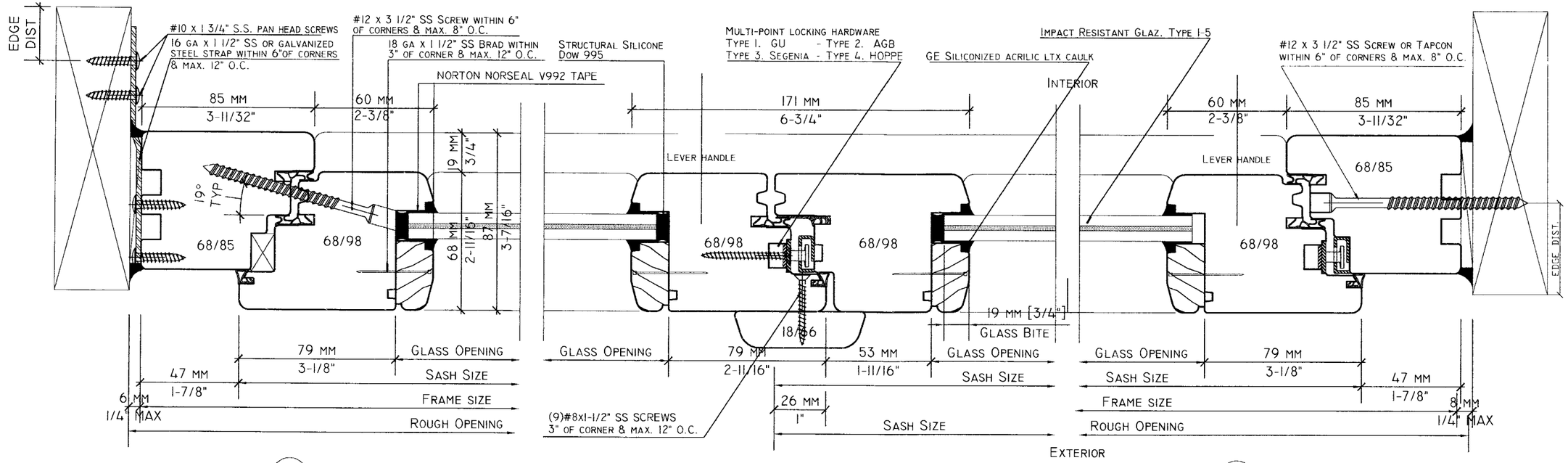

S L-JAMB SECTION

U R-JAMB SECTION

T MEETING STILES

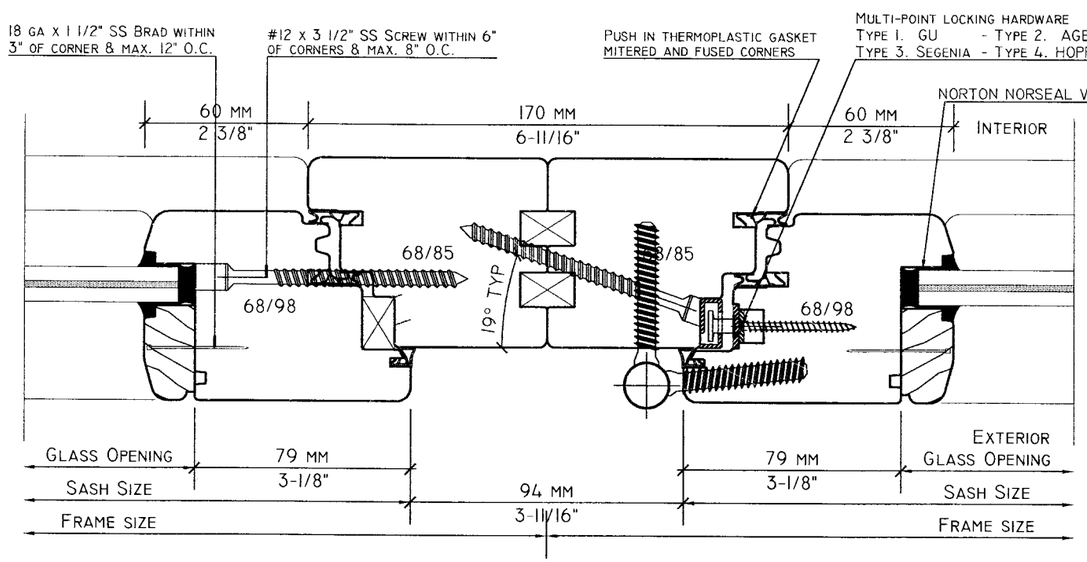

V MULLION JAMBS SECTION

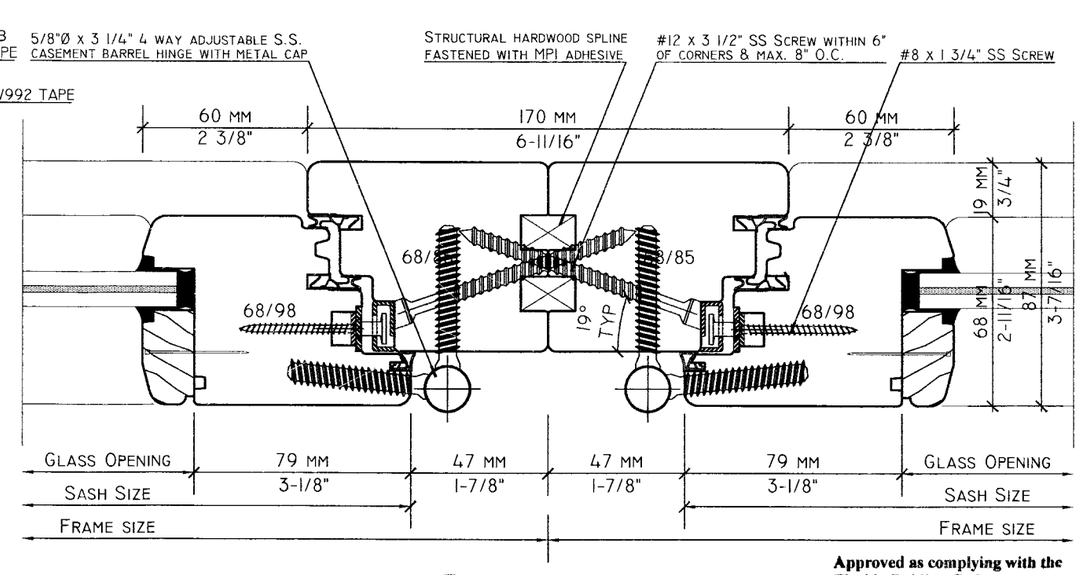

W MULLION JAMBS SECTION

Approved as complying with the Florida Buiding Code
Date 04/12/2012
NOA# 06-1030.05
Miami-Dade County Product Control Division
By

FRANK L. BENNARDO, P.E.
PE0046549
03/21/2007

ENGINEERING EXPRESS®
160 SW 12th AVENUE, #106
DEERFIELD BEACH, FL 33442
PH: (954) 354-0660 FAX: (954) 354-0443
WWW.ENGEXP.COM
CERT OF AUTH #9885
A. FRANK L. BENNARDO, P.E., INC. INNOVATION

HARTMAN WINDOWS & DOORS, LLC
531 SOUTHERN BOULEVARD
WEST PALM BEACH, FL 33405

"EUROPEAN SERIES" MAHOGANY OUTSWING CASEMENT WINDOWS LARGE MISSILE IMPACT RESISTANT

REMARKS	DRWN	CHKD	DATE
INITIAL ISSUE	CL	FLB	10/18/06
BCCO COMMENTS	CL	FLB	1/27/07
BCCO COMMENTS	CL	FLB	3/14/07
-	-	-	-
-	-	-	-

06-HWD-0008
SCALE: - 01
PAGE DESCRIPTION:
- -

19

9

03/21/2007 - 11:47am clangley F:\01 Project Files\Hartman Windows & Doors (HWD)\2006 Jobs\06-HWD-0008 European Casement Window, Outswing, LMI (NOA)\06-HWD-0008_00f European Casement, Outswing, LMI (NOA).dwg

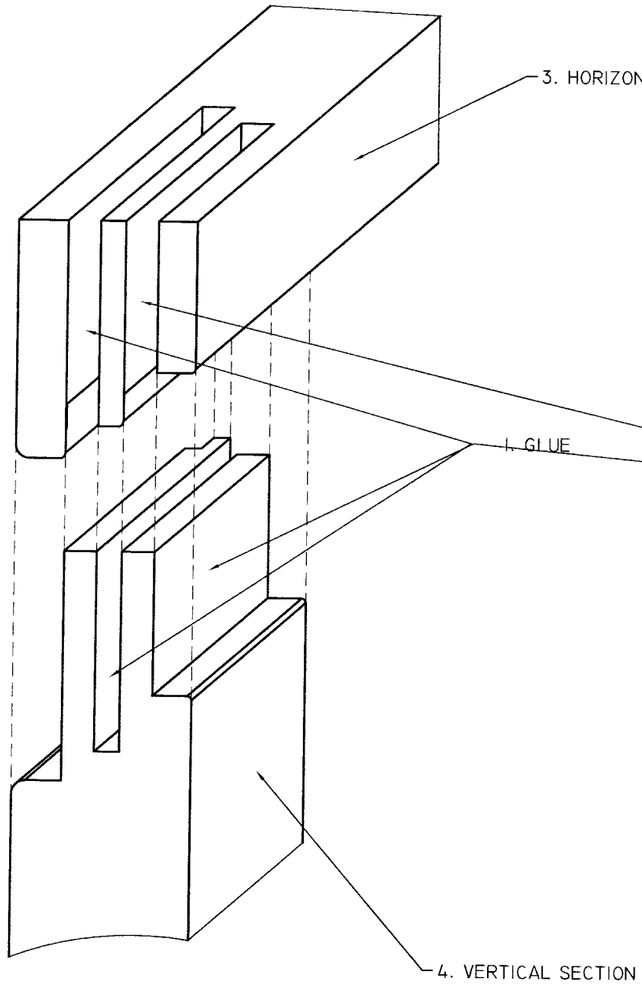

MULTI-FORK FRAME AND VENT
CORNER ASSEMBLY

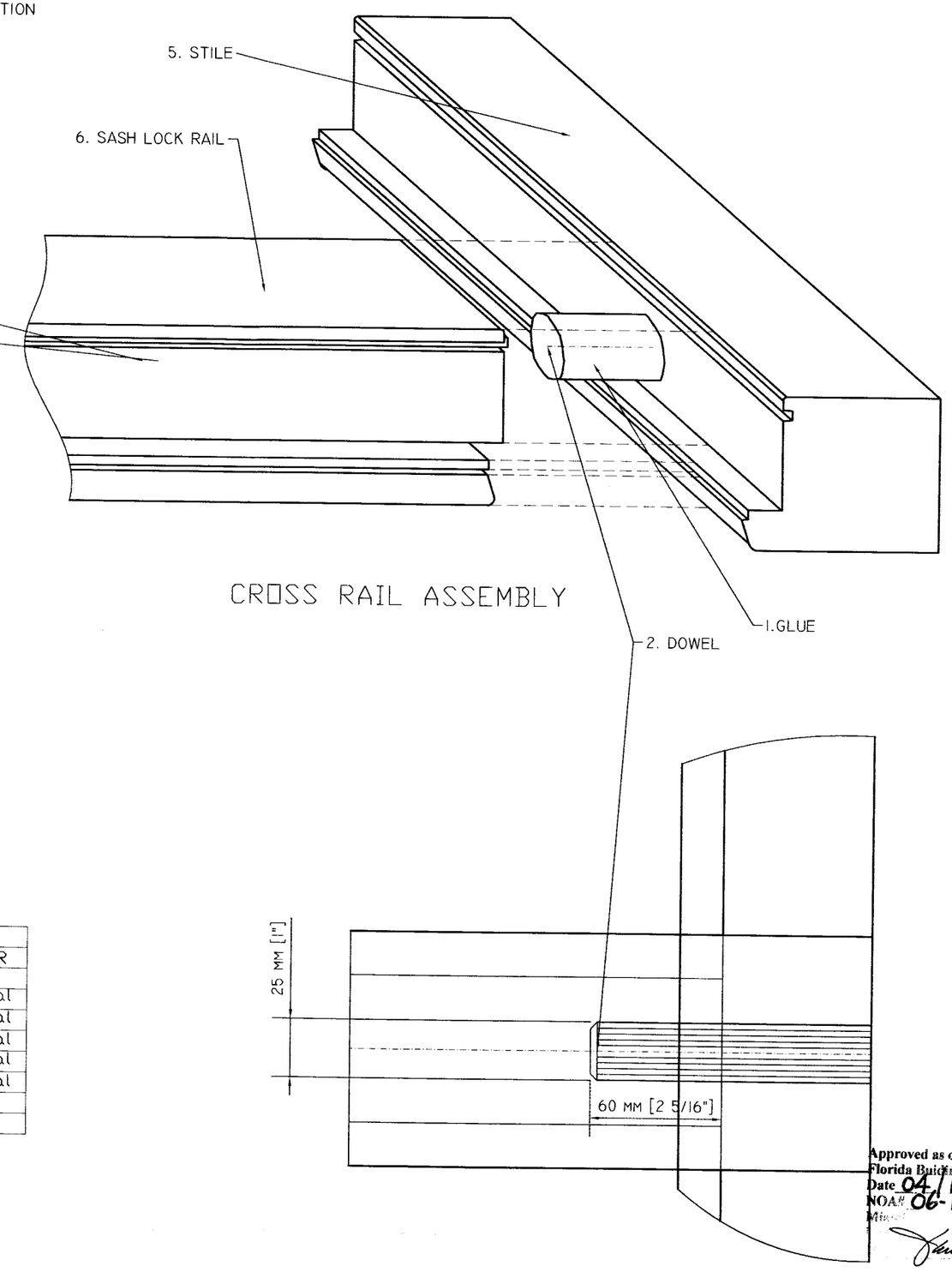

CROSS RAIL ASSEMBLY

MATERIALS LIST		
ITEM	DESCRIPTION	REMARKS/SUPPLIER
1	National Casein or Tite Bond II	Type II Glue
2	Dowel	Mahogany or equal
3	Horizontal Section	Mahogany or equal
4	Vertical Section	Mahogany or equal
5	Stile	Mahogany or equal
6	Sash Lock Rail	Mahogany or equal
7		
8		

Approved as complying with the Florida Building Code
Date 04/12/2012
NOA# 06-1030.05
Miami-Dade

FRANK L. BENNARDO, P.E.
PE0046549
03/21/2007

ENGINEERING EXPRESS®
160 SW 12th AVENUE, #106
DEERFIELD BEACH, FL 33442
Ph: (954) 354-0660 Fax: (954) 354-0443
WWW.ENGEXP.COM
CERT OF AUTH #9885
A FRANK L. BENNARDO, P.E., INC. INNOVATION

HARTMAN WINDOWS & DOORS, LLC
531 SOUTHERN BOULEVARD
WEST PALM BEACH, FL 33405

'EUROPEAN SERIES' MAHOGANY
OUTSWING CASEMENT WINDOWS
LARGE MISSILE IMPACT RESISTANT

REMARKS	DRWN	CHKD	DATE
INITIAL ISSUE	CL	FLB	10/18/06
BCCO COMMENTS	CL	FLB	1/27/07
BCCO COMMENTS	CL	FLB	3/14/07
-	-	-	-
-	-	-	-
-	-	-	-

06-HWD-0008
SCALE: - 01
PAGE DESCRIPTION:
-
-

03/21/2007 - 11:48am clangley F:\01 Project Files\Hartman Windows & Doors (HWD)\2006 Jobs\06-HWD-0008 European Casement Window, Outswing, LMI (NOA)\06-HWD-0008_001 European Casement, Outswing, LMI (NOA).dwg

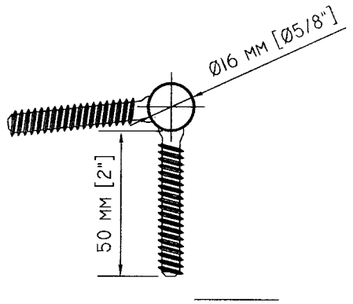

1. Adjustable S.S. Hinge

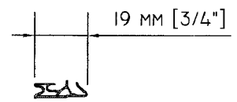

2. Thermoplastic Gasket

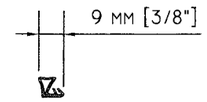

3. Thermoplastic Gasket

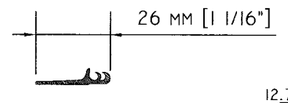

4. Thermoplastic Gasket

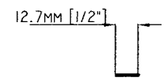

12. NORTON NORSEAL V992 TAPE

MATERIALS LIST			
ITEM	DESCRIPTION	Part No.	SUPPLIER
1	Adjustable S.S. Hinge		Proprietary
2	Gasket(Thermoplastic)	1500530	Olimpia
3	Gasket(Thermoplastic)	1500450	Olimpia
4	Gasket(Thermoplastic)	1500512	Olimpia
5	Angle(Aluminum)		Proprietary
6	Galvanized or S.S. Strap		Proprietary
7	Tilt/Turn Keeper		G.U. A.G.B. S.I. Roto
8	Tilt/Turn Keeper		G.U. A.G.B. S.I. Hoppe
9	Universal Keeper		G.U. A.G.B. S.I. Hoppe
10	Directional Keeper		G.U. A.G.B. S.I. Hoppe
11	Adjustable S.S. Cam		G.U. A.G.B. S.I. Hoppe
12	NORTON NORSEAL V992 TAPE	1500512	Total Plastics
13			
14			

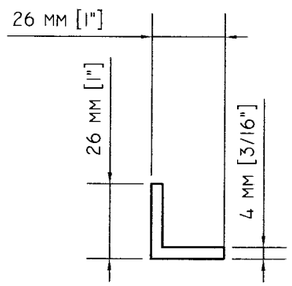

5. Aluminum Angle

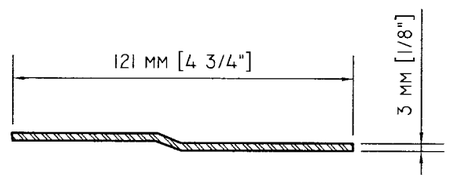

6. Galvanized or S.S. Strap

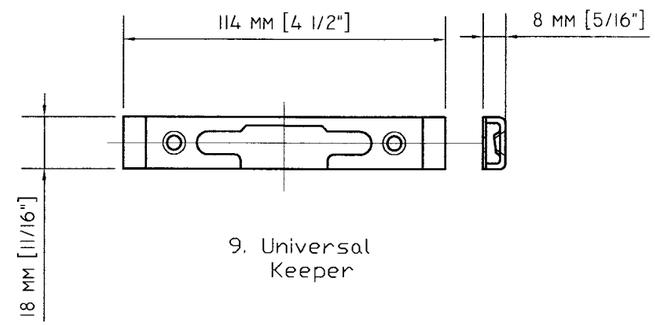

9. Universal Keeper

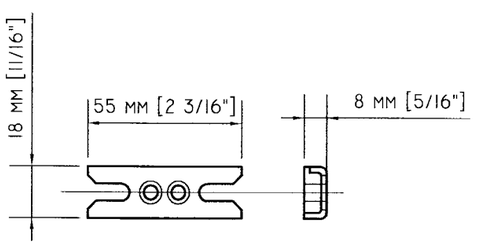

7. Tilt/Turn Keeper

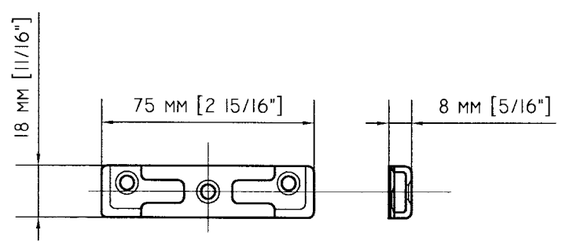

8. Tilt/Turn Keeper

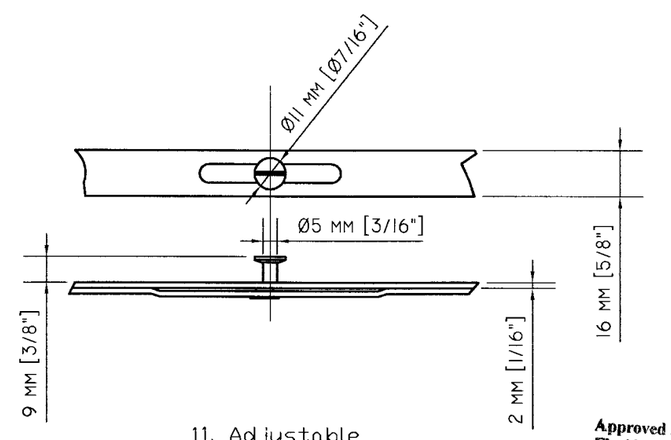

11. Adjustable S.S. Cam

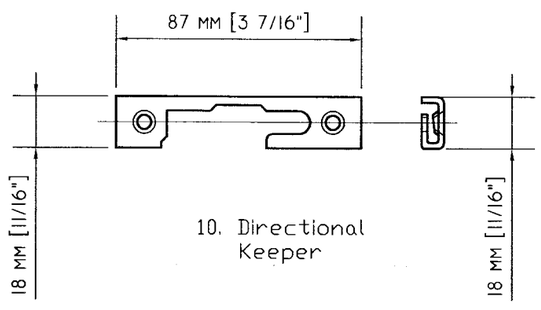

10. Directional Keeper

Approved as complying with the Florida Building Code
Date 04/12/2012
NOA 06-1030.05
Miami-Dade County Product Control

FRANK L. BENNARDO, P.E.
PE0046549
03/21/2007

ENGINEERING EXPRESS®
160 SW 12th AVENUE, #106
DEERFIELD BEACH, FL 33442
PH: (954) 354-0660 FAX: (954) 354-0443
WWW.ENGEXP.COM
CERT OF AUTH #9985
A. FRANK L. BENNARDO, P.E., INC. INNOVATION

HARTMAN WINDOWS & DOORS, LLC
531 SOUTHERN BOULEVARD
WEST PALM BEACH, FL 33405

'EUROPEAN SERIES' MAHOGANY
OUTSWING CASEMENT WINDOWS
LARGE MISSILE IMPACT RESISTANT

REMARKS	DRWN	CHKD	DATE
INITIAL ISSUE	CL	FLB	10/18/06
BCCO COMMENTS	CL	FLB	1/27/07
BCCO COMMENTS	CL	FLB	3/14/07
-	-	-	-
-	-	-	-

06-HWD-0008
SCALE: - 01
PAGE DESCRIPTION:
-
-

11 / 19

03/21/2007 - 11:48am clangley F:\01 Project Files\Hartman Windows & Doors (HWD)\2006 Jobs\06-HWD-0008 European Casement Window, Outswing, LMI (NOA)\06-HWD-0008_001 European Casement, Outswing, LMI (NOA).dwg

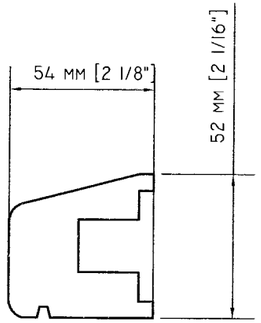

1. Drip Cap/Steel Cover

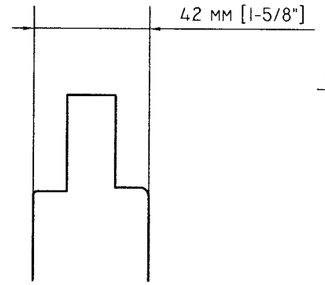

2. Copper Clad Panel

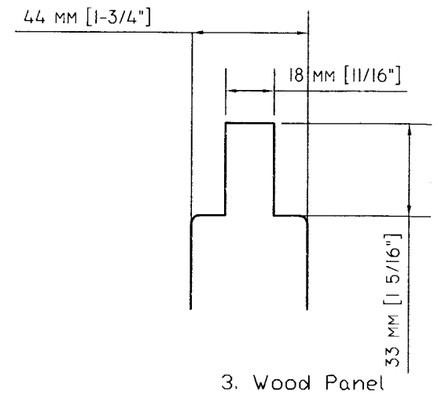

3. Wood Panel

MATERIALS LIST		
ITEM	DESCRIPTION	REMARKS/SUPPLIER
1	Drip Cap/Steel Cover	Mahogany or equal
2	Copper Clad Panel	Mahogany or equal
3	Wood Panel	Mahogany or equal
4	Glazing Bead	Mahogany or equal
5	I.G. Glazing Bead	Mahogany or equal
-	-	-
-	-	-
8	Fixed Sash Blocking	Mahogany or equal
9	Mull Spline	Mahogany or equal
10	Astragal Cap	Mahogany or equal
11	Head/Jamb Copper Profile	Proprietary
12	Panel Edge Copper Profile	Proprietary
13	Lock Rail Copper Profile	Proprietary
14	Sash Copper Profile	Proprietary
15	Sill Copper Profile	Proprietary
16	Glazing Bead	Mahogany or equal

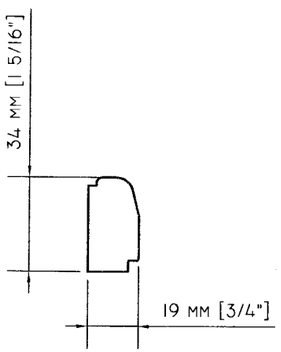

4. Glazing Bead

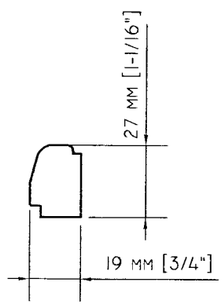

16. Glazing Bead

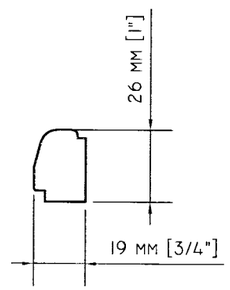

5. I.G. Glazing Bead

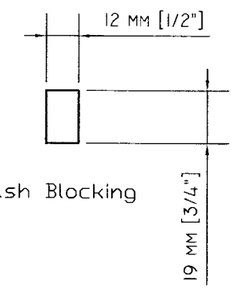

8. Fixed Sash Blocking

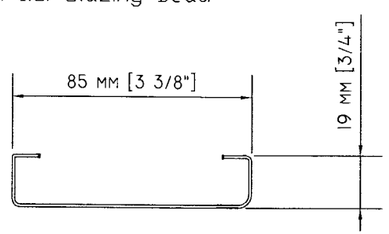

11. Head/Jamb Copper Profile

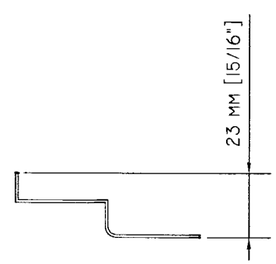

12. Panel Edge Copper Profile

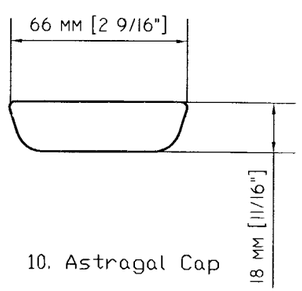

10. Astragal Cap

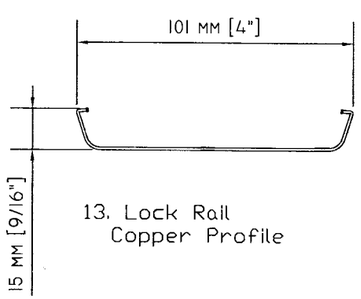

13. Lock Rail Copper Profile

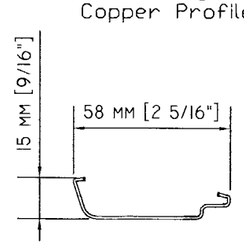

14. Sash Copper Profile

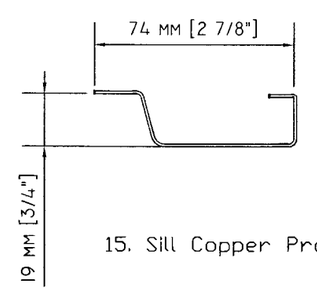

15. Sill Copper Profile

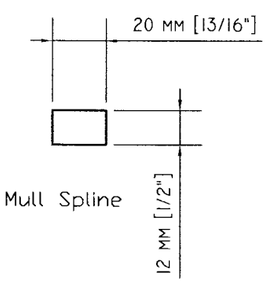

9. Mull Spline

Approved as complying with the Florida Buiding Code
Date 04/12/2012
NOA# 06-1030.05
Miami Dade Product Control Division
By

FRANK L. BENNARDO, P.E.
PE0046549
03/21/2007

ENGINEERING EXPRESS®
160 SW 12th AVENUE, #106
DEERFIELD BEACH, FL 33442
PH: (954) 354-0660 FAX: (954) 354-0443
WWW.ENGEXP.COM
CERT OF AUTH #9885
A FRANK L. BENNARDO, P.E., INC. INNOVATION

HARTMAN WINDOWS & DOORS, LLC
531 SOUTHERN BOULEVARD
WEST PALM BEACH, FL 33405

'EUROPEAN SERIES' MAHOGANY
OUTSWING CASEMENT WINDOWS
LARGE MISSILE IMPACT RESISTANT

REMARKS	DRWN	CHKD	DATE
INITIAL ISSUE	CL	FLB	10/18/06
BCCO COMMENTS	CL	FLB	1/27/07
BCCO COMMENTS	CL	FLB	3/14/07
-	-	-	-
-	-	-	-

06-HWD-0008
SCALE: - 01
PAGE DESCRIPTION:
-
-

03/21/2007 - 11:48am clangley F:\01 Project Files\Hartman Windows & Doors (HWD)\2006 Jobs\06-HWD-0008 European Casement Window, Outswing, LMI (NOA)\06-HWD-0008_00f European Casement, Outswing, LMI (NOA).dwg

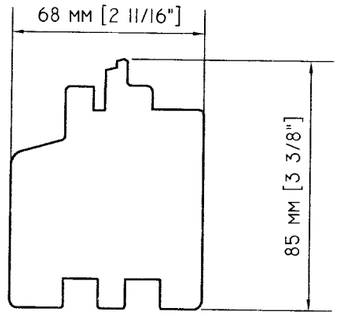

1. Bottom Jamb/Sill

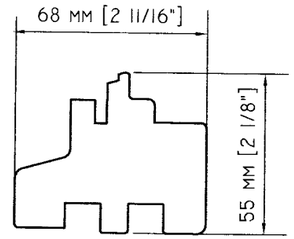

2. Transom Jamb/Sill

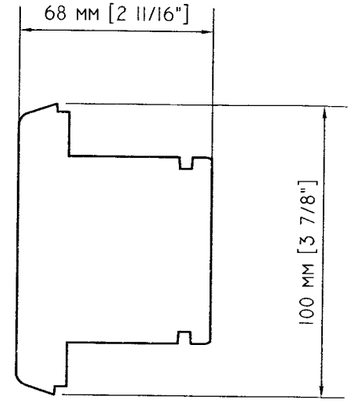

3. Sash Lock Rail

MATERIALS LIST		
ITEM	DESCRIPTION	REMARKS/SUPPLIER
1	Bottom Jamb/Sill	Mahogany or equal
2	Transom Jamb/Sill	Mahogany or equal
3	Sash Lock Rail	Mahogany or equal
4	Inactive Meeting Rail	Mahogany or equal
5	Outswing Sash	Mahogany or equal
6	Direct Glazed Sash	Mahogany or equal
7	Casement Head/Jamb	Mahogany or equal
8	Outswing Sash	Mahogany or equal
9	Copper Clad Bottom Jamb/Sill	Mahogany or equal
10	Copper Clad Bottom Jamb/Sill	Mahogany or equal
11	Copper Clad Sash	Mahogany or equal
12	Copper Clad Lock Rail	Mahogany or equal
13	Copper Clad Jamb	Mahogany or equal
14		

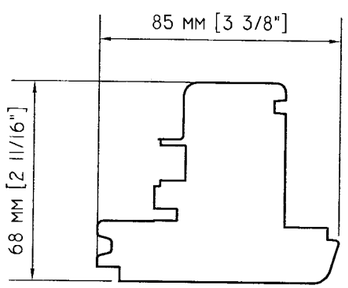

4. Inactive Meeting Rail

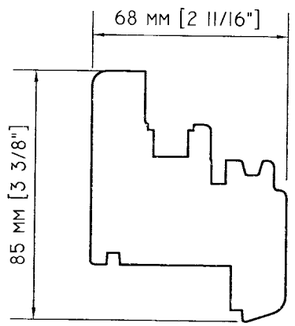

5. Outswing Sash

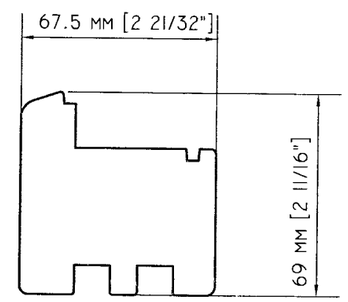

6. Direct Glazed Sash

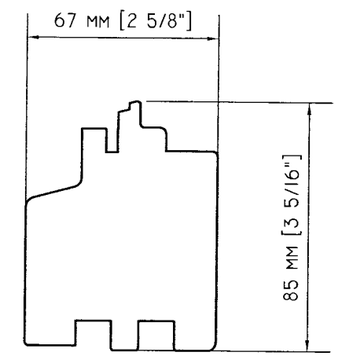

9. Copper Clad Bottom Jamb/Sill

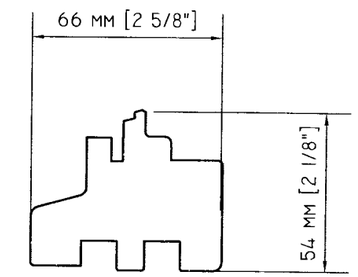

10. Copper Clad Transom Bottom Jamb/Sill

Approved as complying with the Florida Buiding Code
Date 04/12/2012
NOA# 06-1030.05
Miami-Dade County
Division of Building Control
By

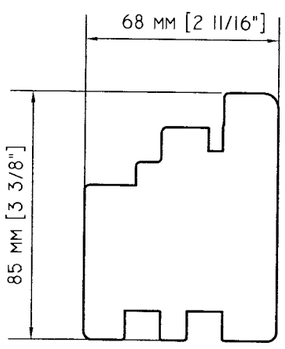

7. Casement Head/Jamb

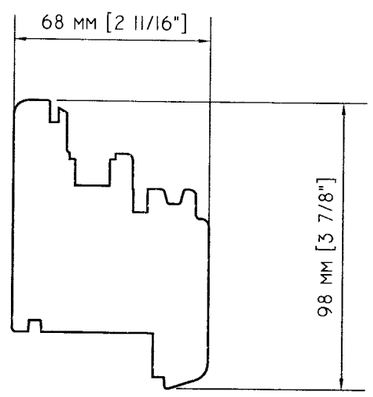

8. Outswing Sash

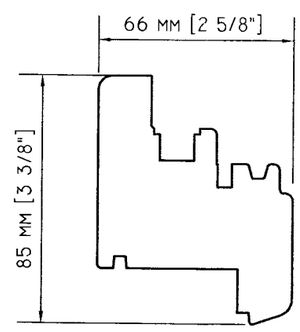

11. Copper Clad Sash

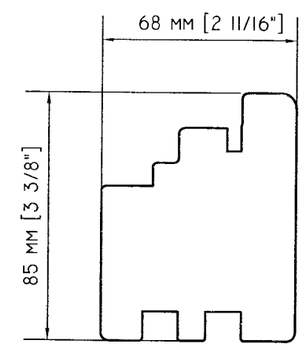

13. Copper Clad Jamb

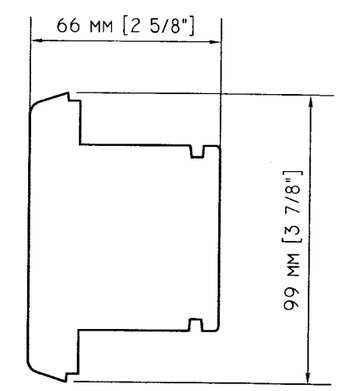

12. Copper Clad Lock Rail

FRANK L. BENNARDO, P.E.
PE0046549
03/21/2007

ENGINEERING EXPRESS®
160 SW 12th AVENUE, #106
DEERFIELD BEACH, FL 33442
PH: (954) 354-0660 FAX: (954) 354-0443
WWW.ENGEXP.COM
CERT OF AUTH #9985
A FRANK L. BENNARDO, P.E., INC. INNOVATION

HARTMAN WINDOWS & DOORS, LLC
531 SOUTHERN BOULEVARD
WEST PALM BEACH, FL 33405

'EUROPEAN SERIES' MAHOGANY
OUTSWING CASEMENT WINDOWS
LARGE MISSILE IMPACT RESISTANT

REMARKS	DRWN	CHKD	DATE
INITIAL ISSUE	CL	FLB	10/18/06
BCCO COMMENTS	CL	FLB	1/27/07
BCCO COMMENTS	CL	FLB	3/14/07
-	-	-	-
-	-	-	-

06-HWD-0008
SCALE: - 01
PAGE DESCRIPTION:
-
-

03/21/2007 - 11:48am clangley F:\01 Project Files\Hartman Windows & Doors (HWD)\2006 Jobs\06-HWD-0008 European Casement Window, Outswing, LMI (NOA)\06-HWD-0008 .00f European Casement, Outswing, LMI (NOA).dwg

OUTSWING APPROVED SHAPES & CONFIGURATIONS

FOR CONFIGURATIONS & SHAPES NOT SPECIFIED HEREIN, REFER TO THE BELOW MIAMI–DADE NOA FOR APPROVED ANCHOR TYPES AND LOCATIONS:

"EUROPEAN SERIES" MAHOGANY
INSWING TILT & TURN
CASEMENT WINDOWS

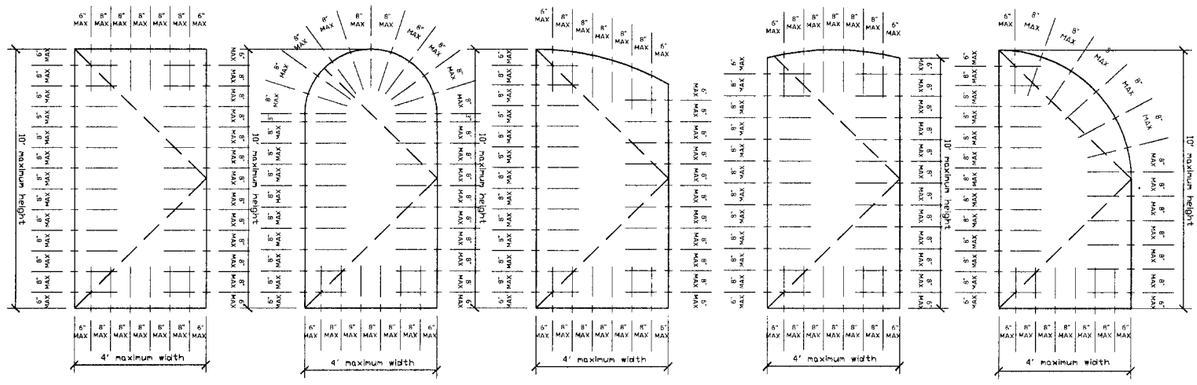

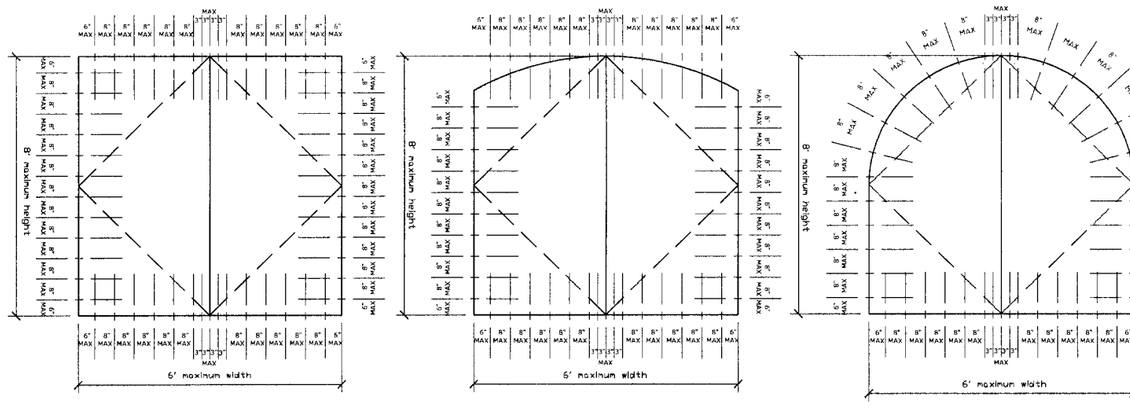

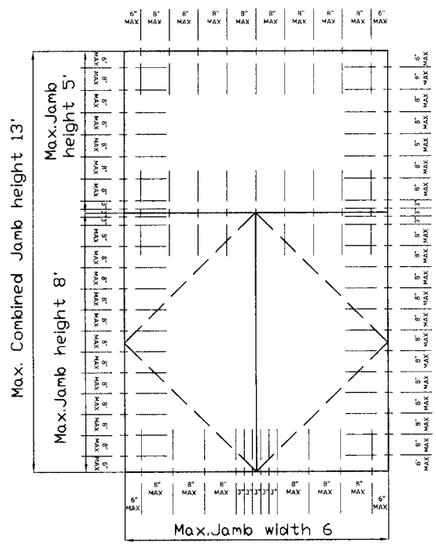

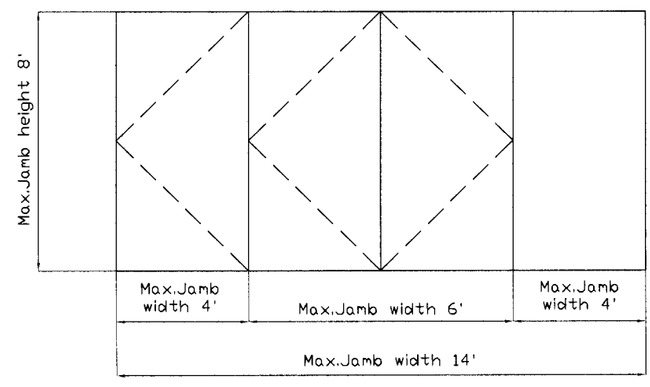

SEE SHEET E7 FOR ANCHOR LOCATIONS

NOTES:
1.OTHER SHAPES MAY APPLY PROVIDING THEY ARE SIMILAR TO THOSE SHOWN
2.ALL SHAPED UNITS MUST FIT INSCRIBED INTO THE ALLOWABLE RECTANGULAR UNITS

Approved as complying with the Florida Building Code
Date 04/12/2012
NOA# 06-1030.05
Miami Dade Product Control Division
By

REMARKS	DRWN	CHKD	DATE
INITIAL ISSUE	CL	FLB	10/18/06
BCCO COMMENTS	CL	FLB	1/27/07
BCCO COMMENTS	CL	FLB	3/14/07
-	-	-	-
-	-	-	-

HARTMAN WINDOWS & DOORS, LLC
531 SOUTHERN BOULEVARD
WEST PALM BEACH, FL 33405

'EUROPEAN SERIES' MAHOGANY
OUTSWING CASEMENT WINDOWS
LARGE MISSILE IMPACT RESISTANT

ENGINEERING EXPRESS®
160 SW 12th AVENUE, #106
DEERFIELD BEACH, FL 33442
PH: (954) 354-0660 FAX: (954) 354-0443
WWW.ENGEXP.COM
CERT OF AUTH #9885
A FRANK L. BENNARDO, P.E., INC. INNOVATION

FRANK L. BENNARDO, P.E.
PE0046549
03/21/2007

06-HWD-0008
SCALE: -
PAGE DESCRIPTION: 01
14
16

HINGES/LOCK POINTS REQUIREMENTS TABLE									
OUTSWING ARCH TOP WINDOW									
LOCK POINTS QTY REQUIREMENTS						HINGES QTY REQUIREMENTS			
ARCH RAIL/BOTTOM		MEETING RAIL		Left/Right Side		SASH HEIGHT	QTY.	Dist.from bottom corner	Dist. from spring line
SASH WIDTH	QTY.	SASH HEIGHT	QTY.	SASH HEIGHT	QTY.	6'-8'	5	7"	2"
2'-3'	3	6'-8'	4	6'-8'	7	4'-6'	3	7"	2"
Less than 2'	2	4'-6'	3	4'-6'	6	2'-4'	2	7"	2"
		2'-4'	2	2'-4'	4	Less than 2'	2	7"	2"
		Less than 2'	2	Less than 2'	2				

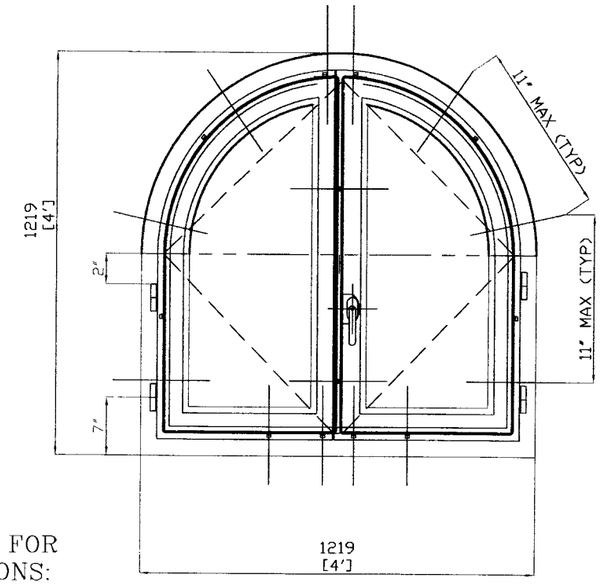

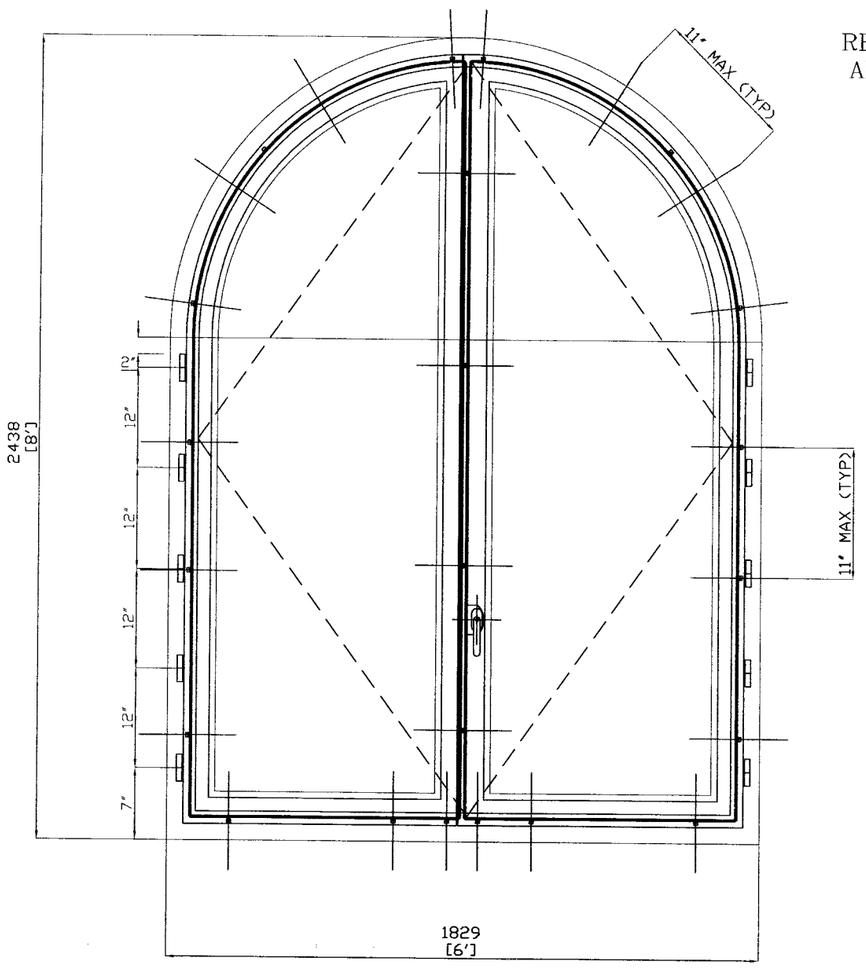

REFER TO THE BELOW MIAMI-DADE NOA FOR
APPROVED ANCHOR TYPES AND LOCATIONS:
"EUROPEAN SERIES" MAHOGANY
INSWING TILT & TURN
CASEMENT WINDOWS

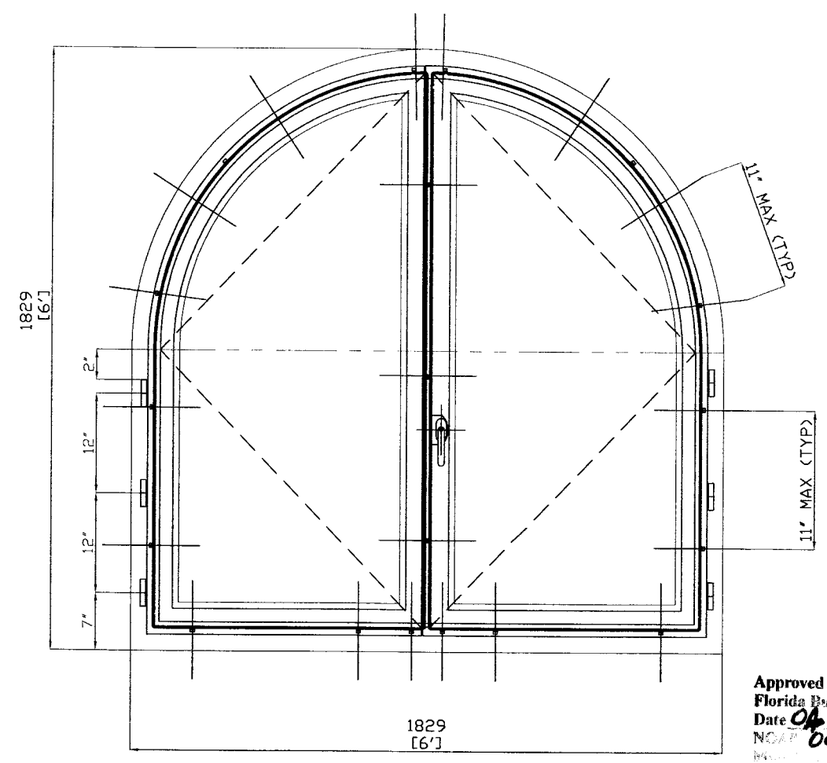

Approved as complying with the
Florida Building Code
Date 04/12/2012
NOA# 06-103.05
Product Control

FRANK L. BENNARDO, P.E.
PE0046549
03/21/2007

ENGINEERING EXPRESS®
160 SW 12th AVENUE, #106
DEERFIELD BEACH, FL 33442
PH: (954) 354-0660 FAX: (954) 354-0443
WWW.ENGEXP.COM
CERT OF AUTH #9885
A FRANK L. BENNARDO, P.E., INC. INNOVATION

HARTMAN WINDOWS & DOORS, LLC
531 SOUTHERN BOULEVARD
WEST PALM BEACH, FL 33405

'EUROPEAN SERIES' MAHOGANY
OUTSWING CASEMENT WINDOWS
LARGE MISSILE IMPACT RESISTANT

REMARKS	DRWN	CHKD	DATE
INITIAL ISSUE	CL	FLB	10/18/06
BCCO COMMENTS	CL	FLB	1/27/07
BCCO COMMENTS	CL	FLB	3/14/07

06-HWD-0008
SCALE: - 01
PAGE DESCRIPTION:
-
-

19

15

03/21/2007 - 11:48am clangley F:\01 Project Files\Hartman Windows & Doors (HWD)\2006 Jobs\06-HWD-0008 European Casement Window, Outswing, LMI (NOA)\06-HWD-0008_00f European Casement, Outswing, LMI (NOA).dwg

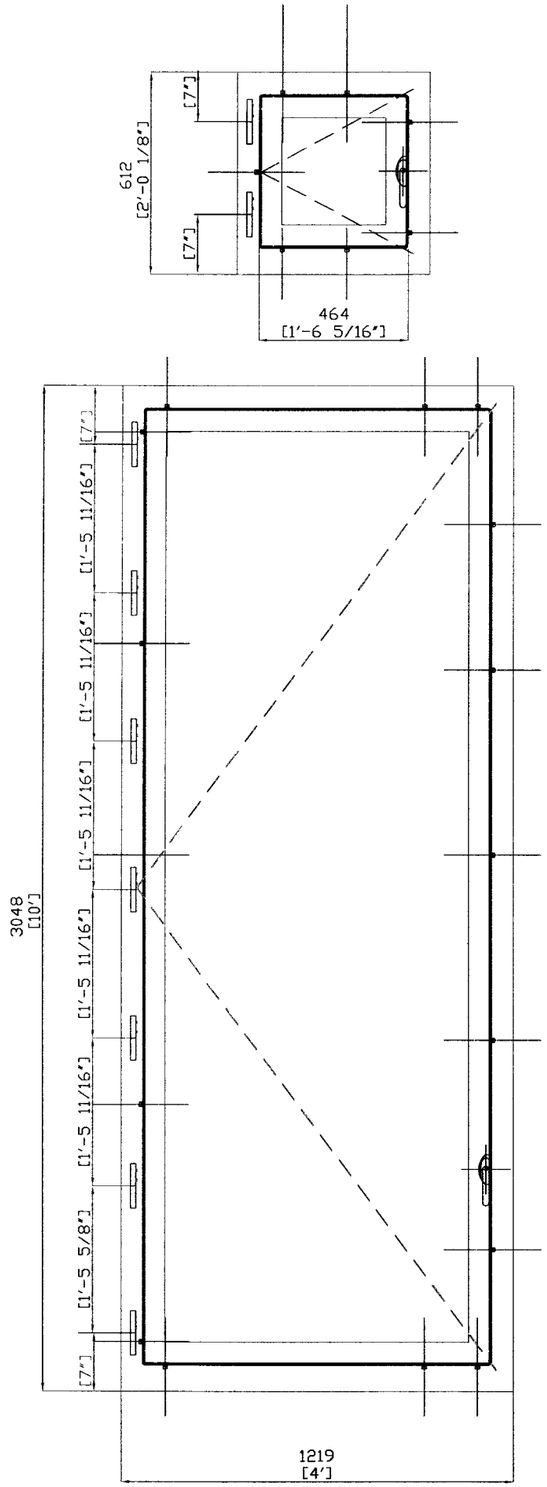

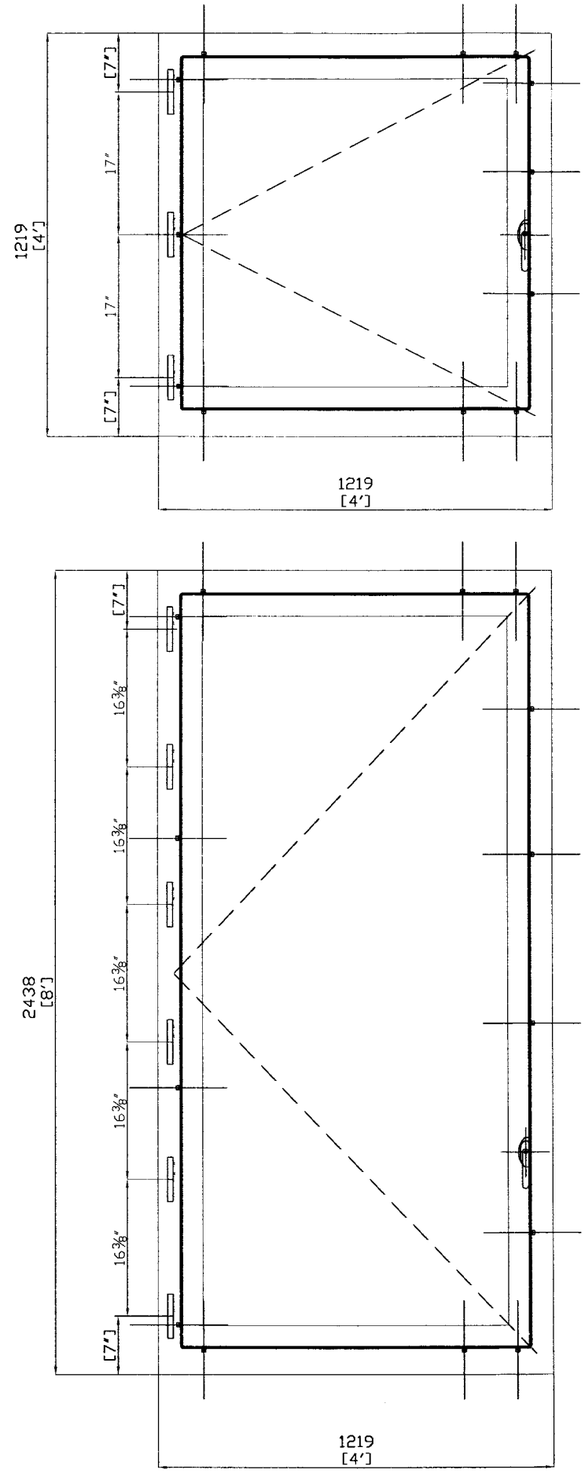

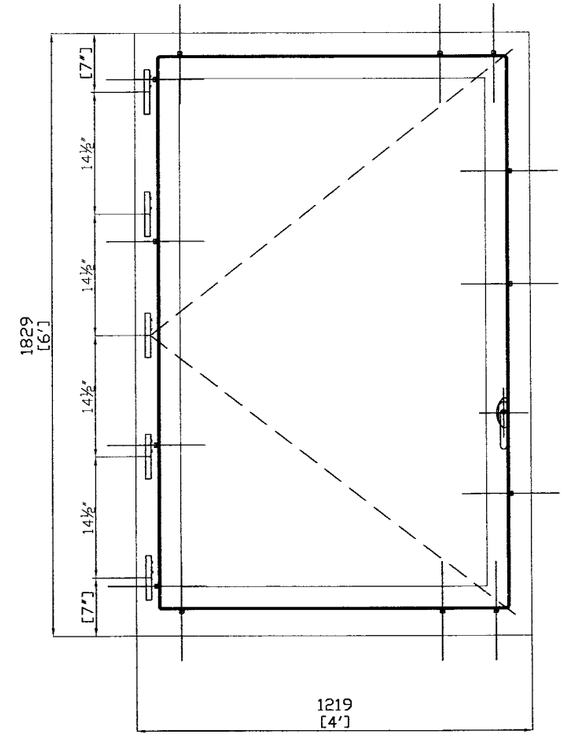

HINGE/LOCK POINT REQUIREMENTS

OUTSWING RECTANGLE WINDOWS

LOCK POINT REQUIREMENTS				HINGE REQUIREMENTS		
TOP/BOTTOM		LEFT/RIGHT SIDE		SASH HIGHT	QTY.	Dist.from corner
SASH WIDTH	QTY.	SASH HEIGHT	QTY.	8'–10'	7	7"
2'–4'	3	8'–10'	5	6'–8'	6	7"
2'	2	6'–8	4	4'–6'	5	7"
Less 2'	2	2'–6	3	2'–4'	3	7"
		Less 2'	2	Less 2'	2	7"

Approved as complying with the Florida Buiding Code
Date 04/12/2012
NOA# 06-1030.05
Miami-Dade Product Control Division
By

FRANK L. BENNARDO, P.E.
PE0046549
03/21/2007

ENGINEERING EXPRESS®
160 SW 12th AVENUE, #106
DEERFIELD BEACH, FL 33442
PH: (954) 354-0660 FAX: (954) 354-0443
WWW.ENGEXP.COM
CERT OF AUTH #9885
A. FRANK L. BENNARDO, P.E., INC. INNOVATION

HARTMAN WINDOWS & DOORS, LLC
531 SOUTHERN BOULEVARD
WEST PALM BEACH, FL 33405

'EUROPEAN SERIES' MAHOGANY OUTSWING CASEMENT WINDOWS LARGE MISSILE IMPACT RESISTANT

REMARKS	DRWN	CHKD	DATE
INITIAL ISSUE	CL	FLB	10/18/06
BCCO COMMENTS	CL	FLB	1/27/07
BCCO COMMENTS	CL	FLB	3/14/07
-	-	-	-
-	-	-	-

06-HWD-0008

SCALE: - 01

PAGE DESCRIPTION:
-
-

03/21/2007 - 11:48am clangley F:\01 Project Files\Hartman Windows & Doors (HWD)\2006 Jobs\06-HWD-0008 European Casement Window, Outswing, LMI (NOA)\06-HWD-0008_00f European Casement, Outswing, LMI (NOA).dwg

OUTSWING 8' TO 10'
STEEL REINFORCED MULLIONS

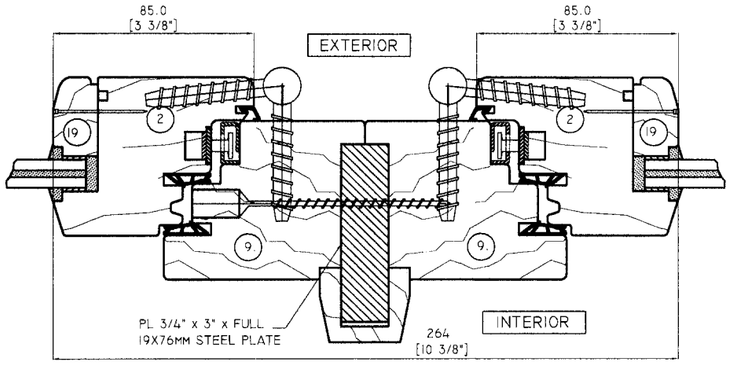

OUTSWING TO OUTSWING W/
MULLED JAMBS

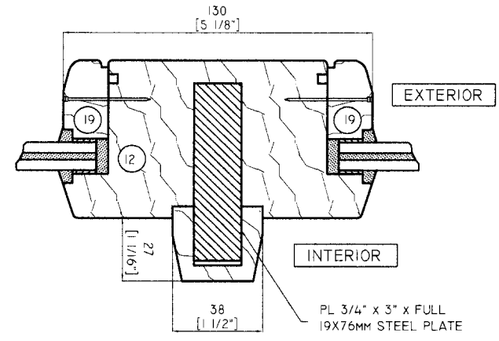

SASH ONLY TO SASH ONLY W/
SINGLE MULL BAR

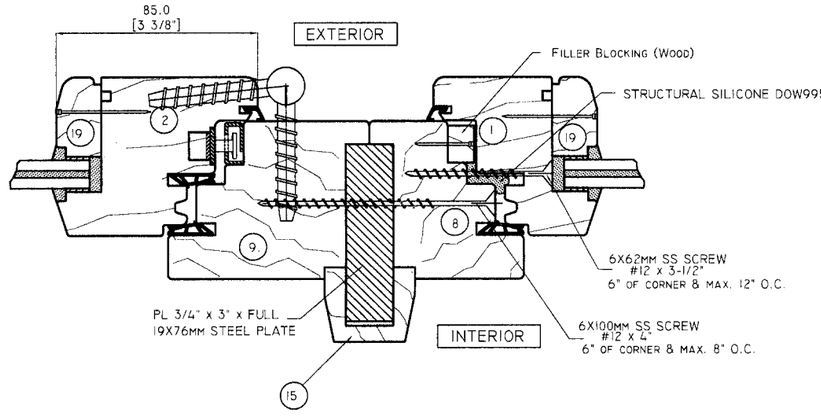

OUTSWING W/ FIXED OUTSWING
SIDELITE

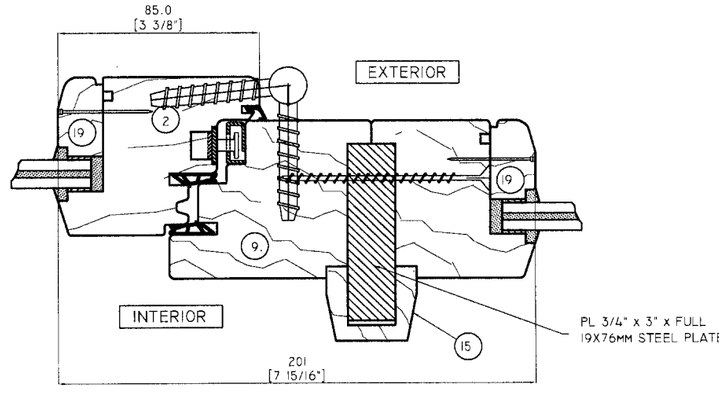

OUTSWING TO SASH ONLY SIDELITE

Approved as complying with the Florida Building Code
Date 04/12/2012
NOA# 06-1030.05
Miami Dade Product Control Division
By

REMARKS	DRWN	CHKD	DATE
INITIAL ISSUE	CL	FLB	10/18/06
BCCO COMMENTS	CL	FLB	1/27/07
BCCO COMMENTS	CL	FLB	3/14/07
-	-	-	-
-	-	-	-

06-HWD-0008

SCALE:

PAGE DESCRIPTION: 01

17 / 16

HARTMAN WINDOWS
& DOORS, LLC
531 SOUTHERN BOULEVARD
WEST PALM BEACH, FL 33405

'EUROPEAN SERIES' MAHOGANY
OUTSWING CASEMENT WINDOWS
LARGE MISSILE IMPACT RESISTANT

ENGINEERING EXPRESS®
160 SW 12th AVENUE, #106
DEERFIELD BEACH, FL 33442
PH: (954) 354-0660 FAX: (954) 354-0443
WWW.ENGEXP.COM
CERT OF AUTH #9885
A FRANK L. BENNARDO, P.E., INC. INNOVATION

FRANK L. BENNARDO, P.E.
PE0046549

03/21/2007

OUTSWING W/ SIDELITES LESS THAN 8'

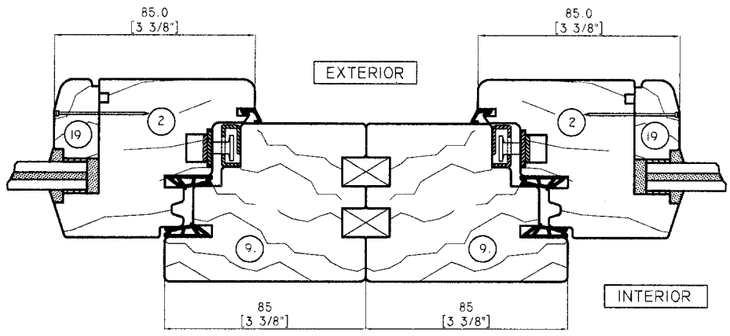

OUTSWING TO OUTSWING W/ MULLED JAMBS

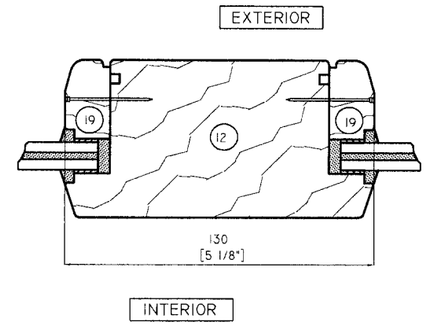

SASH ONLY TO SASH ONLY W/ SINGLE MULL BAR

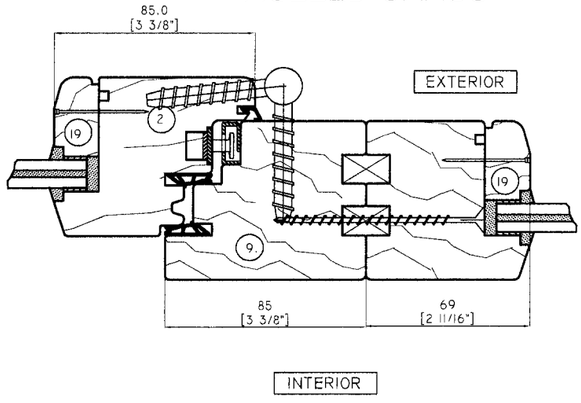

OUTSWING TO SASH ONLY SIDELITE

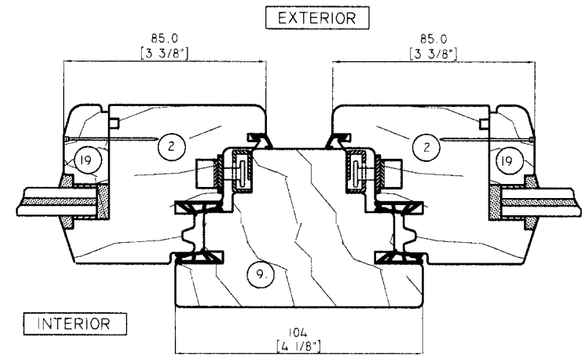

OUTSWING TO OUTSWING W/ SINGLE MULL BAR

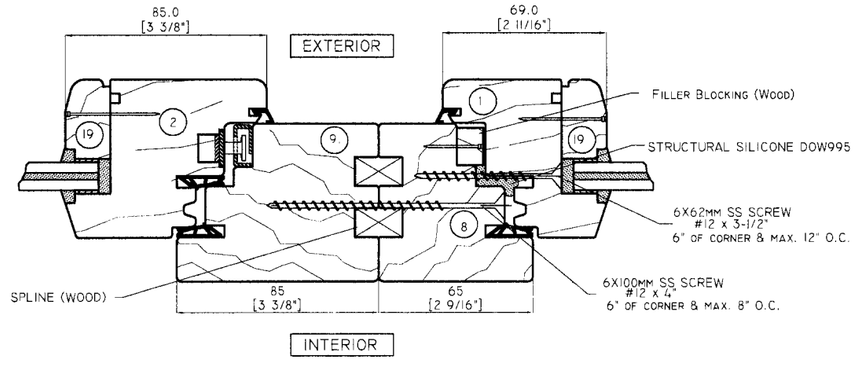

OUTSWING W/ FIXED OUTSWING SIDELITE

Approved as complying with the Florida Building Code
Date 04/12/2012
NOA# 06-1030.05
Miami Dade Product Control Division
By

REMARKS	DRWN	CHKD	DATE
INITIAL ISSUE	CL	FLB	10/18/06
BCCO COMMENTS	CL	FLB	1/27/07
BCCO COMMENTS	CL	FLB	3/14/07
-	-	-	-
-	-	-	-

HARTMAN WINDOWS & DOORS, LLC
531 SOUTHERN BOULEVARD
WEST PALM BEACH, FL 33405

'EUROPEAN SERIES' MAHOGANY
OUTSWING CASEMENT WINDOWS
LARGE MISSILE IMPACT RESISTANT

ENGINEERING EXPRESS®
160 SW 12th AVENUE, #106
DEERFIELD BEACH, FL 33442
PH: (954) 354-0660 FAX: (954) 354-0443
WWW.ENGEXP.COM
CERT OF AUTH #9885
A FRANK L. BENNARDO, P.E., INC. INNOVATION

FRANK L. BENNARDO, P.E.
PE0046549
03/21/2007

SCALE: 01
PAGE DESCRIPTION:
06-HWD-0008
18
19

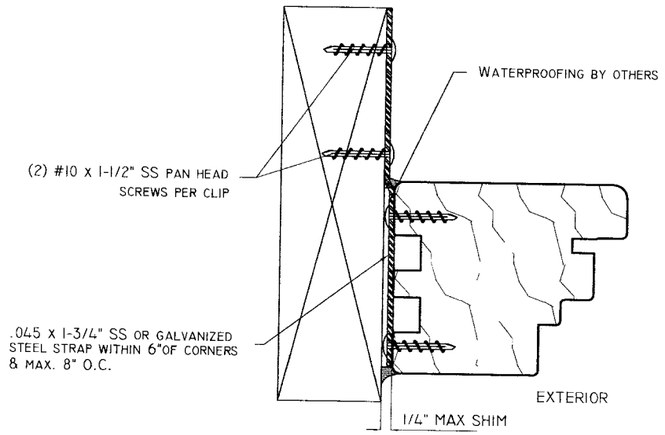

0.045 X 1-3/4" X 5" GALVANIZED STEEL CLIPS
PROVIDE #8 x 1-1/2" STAINLESS STEEL FASTENERS FOR WOOD SUBSTRATE
SCREW THROUGH STEEL CLIP INTO WOOD BUCK OR MASONRY
OPENING. MIN. PENETRATION 1-1/4" SPACED AS INICATED

TYP CLIP DETAIL

ALT ANCHOR METHOD #1

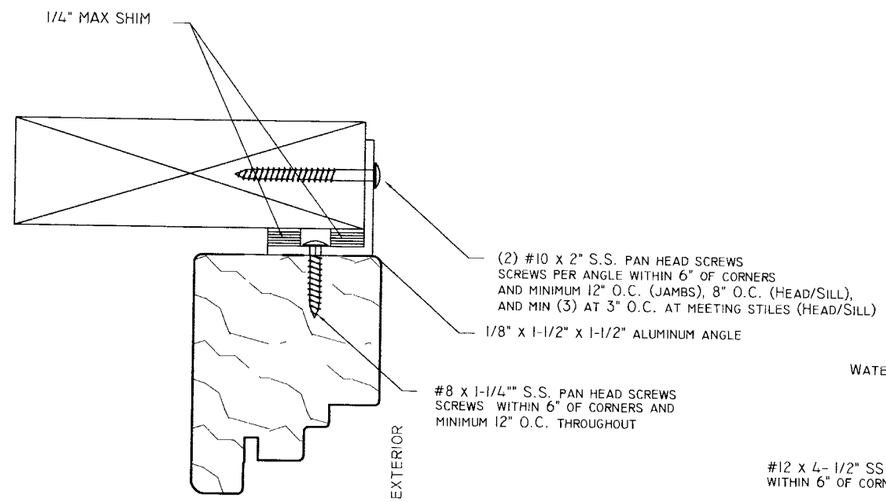

1-1/2" X 1-1/2" X 1/8" ALUMINUM ANGLE
PROVIDE #10 x 2" STAINLESS STEEL FASTENERS FOR WOOD SUBSTRATE
SCREW THROUGH ALUMINUM NAIL FIN INTO WOOD BUCK
MIN. 1-3/4" PENETRATION SPACED AS INDICATED

TYP NAIL FIN DETAIL

ALT ANCHOR METHOD #2

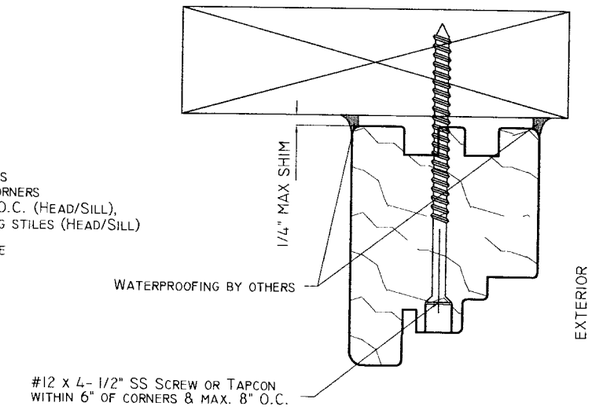

#12 x 4-1/2" S.S. SCREW
THROUGH JAMB INTO WOOD BUCK OR MASONRY
OPENING. MIN. PENETRATION 1-1/4" SPACED AS INICATED

TYP DIRECT ANCHOR DETAIL

ALT ANCHOR METHOD #3

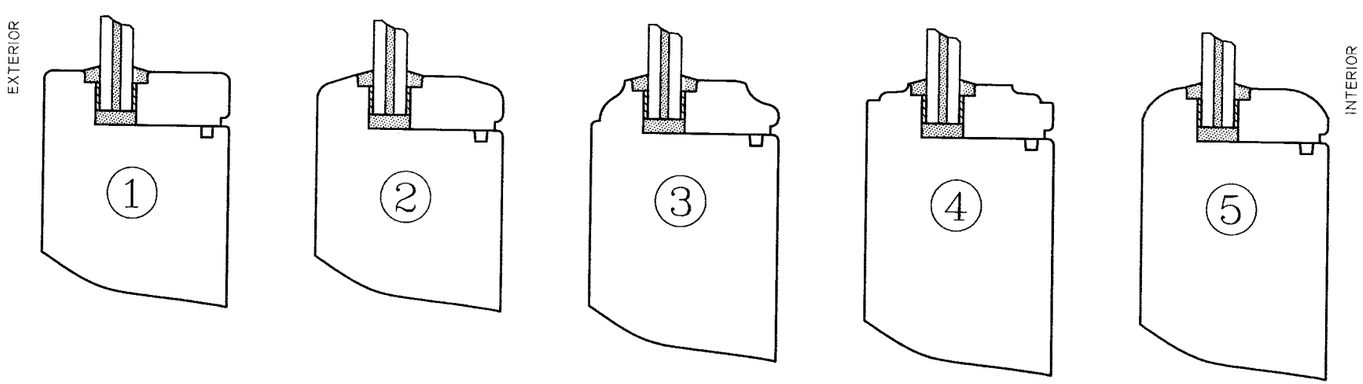

ALTERNATE GLAZING PROFILES

Approved as complying with the Florida Buiding Code
Date 04/12/2012
NOA# 06-1030.05
Miami Dade Product Control Division
By

FRANK L. BENNARDO, P.E.
PE0046549
03/21/2007

ENGINEERING EXPRESS®
160 SW 12th AVENUE, #106
DEERFIELD BEACH, FL 33442
PH: (954) 354-0660 FAX: (954) 354-0443
WWW.ENGEXP.COM
CERT OF AUTH #9885
A FRANK L. BENNARDO, P.E., INC. INNOVATION

HARTMAN WINDOWS & DOORS, LLC
531 SOUTHERN BOULEVARD
WEST PALM BEACH, FL 33405

'EUROPEAN SERIES' MAHOGANY
OUTSWING CASEMENT WINDOWS
LARGE MISSILE IMPACT RESISTANT

REMARKS	DRWN	CHKD	DATE
INITIAL ISSUE	CL	FLB	10/18/06
BCCO COMMENTS	CL	FLB	1/27/07
BCCO COMMENTS	CL	FLB	3/14/07
-	-	-	-
-	-	-	-

06-HWD-0008
SCALE: - 01
PAGE DESCRIPTION:
-
-

03/21/2007 - 11:54am clangley F:\01 Project Files\Hartman Windows & Doors (HWD)\2006 Jobs\06-HWD-0008 European Casement Window, Outswing, LMI (NOA)\06-HWD-0008_00f European Casement, Outswing, LMI (NOA).dwg