MIAMI-DADE COUNTY, FLORIDA
METRO-DADE FLAGLER BUILDING
140 WEST FLAGLER STREET, SUITE 1603
MIAMI, FLORIDA 33130-1563
(305) 375-2901 FAX (305) 375-2908
www.buldingcodeonline.com

BUILDING CODE COMPLIANCE OFFICE (BCCO)
PRODUCT CONTROL DIVISION

NOTICE OF ACCEPTANCE (NOA)

M.Q. Windows, Inc.
1855 Griffin Road, Suite A-271
Dania, FL 33004

SCOPE:

This NOA is being issued under the applicable rules and regulations governing the use of construction materials. The documentation submitted has been reviewed by Miami-Dade County Product Control Division and accepted by the Board of Rules and Appeals (BORA) to be used in Miami Dade County and other areas where allowed by the Authority Having Jurisdiction (AHJ).

This NOA shall not be valid after the expiration date stated below. The Miami-Dade County Product Control Division (In Miami Dade County) and/or the AHJ (in areas other than Miami Dade County) reserve the right to have this product or material tested for quality assurance purposes. If this product or material fails to perform in the accepted manner, the manufacturer will incur the expense of such testing and the AHJ may immediately revoke, modify, or suspend the use of such product or material within their jurisdiction. BORA reserves the right to revoke this acceptance, if it is determined by Miami-Dade County Product Control Division that this product or material fails to meet the requirements of the applicable building code.

This product is approved as described herein, and has been designed to comply with the Florida Building Code, including the High Velocity Hurricane Zone.

DESCRIPTION: Series "JS" Direct Glazed Wood Fixed Window – L.M.I.

APPROVAL DOCUMENT: Drawing No. **JS-5-DS**, titled "JS Series Direct Glazed Wood Window - LMI", sheets 1 through 10 of 10, dated 04/05/06 with revision dated 01/04/07, prepared by Tilteco, Inc., signed and sealed by Walter Tillit Jr., P.E., bearing the Miami-Dade County Product Control Approval stamp with the Notice of Acceptance number and approval date by the Miami-Dade County Product Control Division.

MISSILE IMPACT RATING: Large and Small Missile Impact Resistant

LABELING: Each unit shall bear a permanent label with the manufacturer's name or logo, city, state and following statement: "Miami-Dade County Product Control Approved", unless otherwise noted herein.

RENEWAL of this NOA shall be considered after a renewal application has been filed and there has been no change in the applicable building code negatively affecting the performance of this product.

TERMINATION of this NOA will occur after the expiration date or if there has been a revision or change in the materials, use, and/or manufacture of the product or process. Misuse of this NOA as an endorsement of any product, for sales, advertising or any other purposes shall automatically terminate this NOA. Failure to comply with any section of this NOA shall be cause for termination and removal of NOA.

ADVERTISEMENT: The NOA number preceded by the words Miami-Dade County, Florida, and followed by the expiration date may be displayed in advertising literature. If any portion of the NOA is displayed, then it shall be done in its entirety.

INSPECTION: A copy of this entire NOA shall be provided to the user by the manufacturer or its distributors and shall be available for inspection at the job site at the request of the Building Official.

This NOA consists of this page 1 and evidence page E-1, as well as approval document mentioned above.

The submitted documentation was reviewed by **Manuel Perez, P.E.**

M.Q. Windows, Inc.

NOTICE OF ACCEPTANCE: EVIDENCE SUBMITTED

A. DRAWINGS

1. Manufacturer's die drawings and sections.
2. Drawing No **JS-5-DS**, Sheets 1 through 10 of 10, titled "JS Series Direct Glazed Wood Window - LMI", dated 04/05/06 with revision dated 01/04/07, prepared by Tilteco, Inc, signed and sealed by Walter A. Tillit Jr., P.E.

B. TESTS

1. Test reports on: 1) Air Infiltration Test, per FBC, TAS 202-94
   ~~2) Uniform Static Air Pressure Test, per FBC, TAS 202-94~~
   3) Water Resistance Test, per FBC, TAS 202-94
   4) Large Missile Impact Test per FBC, TAS 201-94
   5) Cyclic Wind Pressure Loading per FBC, TAS 203-94

   along with marked-up drawings and installation diagram of a direct set wood window,
   Sample #1 Rectangular Frame, IG / lam unit, dated 02 /16-17/04,
   Sample #2 Rectangular Frame, laminated glass, dated 01 /20-23/04,
   Sample #3 Eyebrow Frame Head, IG / lam unit, dated 01 /15/04,
   Sample #4 Hal Round Frame Head, laminated glass, dated 02/19/04,
   prepared by Hurricane Test Laboratory, LLC, Test Report No. **HTL-0118-0117-04**, signed and sealed by Vinu J. Abraham, P.E.

C. CALCULATIONS

1. Anchor verification calculations and structural analysis, complying with FBC-2004, prepared by Tilteco, Inc, dated 5/23/06, revised on 06/14/06, signed and sealed by Walter A. Tillit, Jr., P.E.
   Complies with ASTM E1300-02

D. QUALITY ASSURANCE

1. Miami Dade Building Code Compliance Office (BCCO).

E. MATERIAL CERTIFICATIONS

1. Notice of Acceptance No. **03-0415.13** issued to Solutia, Inc. for "**Vanceva Composites used for the lamination of glass**" dated 12/11/03, expiring on 12/11/08.

F. STATEMENTS

1. Statement letter of conformance, dated October 27, 2006, signed and sealed by Walter A. Tillit Jr., P.E.
2. Statement letter of no financial interest, dated October 27, 2006, signed and sealed by Walter A. Tillit Jr., P.E.
3. Laboratory compliance letter for Test Report no. **HTL- 0118-0117-04**, issued by Hurricane Test Laboratory, Inc., dated March 18, 2004 revised on February 26, 2007, signed and sealed by Vinu J. Abraham, P.E.

G. OTHER

1. None.

Manuel Perez, P.E.
Product Control Examiner
NOA No 06-1031.04
Expiration Date: March 29, 2012
Approval Date: March 29, 2007

CONFIGURATION: O
WOOD: Mahogany
VIEWED FROM THE OUTSIDE

ALLOWABLE DESIGN PRESSURE:
AS PER TABLE 1 ON sheets 3 to 8.

GENERAL NOTES:

1- THIS PRODUCT IS DESIGNED TO COMPLY WITH THE PROVISIONS OF THE HIGH VELOCITY HURRICANE ZONE OF THE 2004 EDITION OF THE FLORIDA BUILDING CODE WITH THE 2005 AND 2006 SUPPLEMENTS.

2- THIS PRODUCT IS LARGE MISSILE IMPACT RESISTANT AND HAS BEEN TESTED IN ACCORDANCE WITH THE HIGH VELOCITY HURRICANE ZONE PROTOCOLS TAS 201, 202 AND 203. NO SHUTTERS ARE REQUIRED.

3- WOOD BUCKS (BY OTHERS) AND OPENINGS MUST BE DESIGNED BY THE PROFESSIONAL OF RECORD TO PROPERLY TRANSFER WIND LOADS TO THE MAIN STRUCTURE.

4- SPECIFIED ANCHOR EMBEDMENT TO BASE MATERIAL SHALL BE BEYOND WALL FINISH OR STUCCO.

5- IN ORDER TO VERIFY THAT ANCHORS FOR THIS PRODUCT WERE NOT OVERSTRESSED AS TESTED, A 33% ALLOWABLE STRESS INCREASE **WAS NOT** USED IN THEIR ANALYSIS. HOWEVER, A LOAD DURATION FACTOR OF Cd = 1.6 WAS USED TO VERIFY THEIR SPACING IN WOOD SUBSTRATES.

6- MATERIALS, BUT NOT LIMITED TO STEEL & STEEL SCREWS THAT COME IN CONTACT WITH OTHER DISSIMILAR MATERIALS SHALL MEET WITH SECTION 2003.8.4 OF THE FLORIDA BUILDING CODE.

APPROVED SHAPES

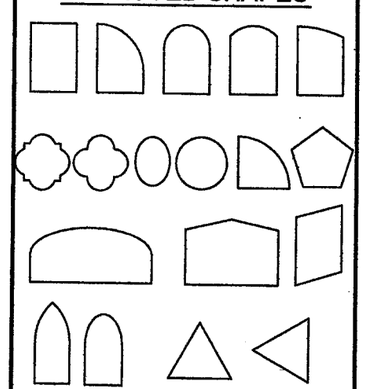

NOTES:
1. Other shapes may apply providing they are similar to those shown & have corner construction as described on sheet 10.
2. All shaped units must fit inscribed into the allowable rectangular units.
3. Approved shaped members to be conform to cross section A1 on sheet 2.

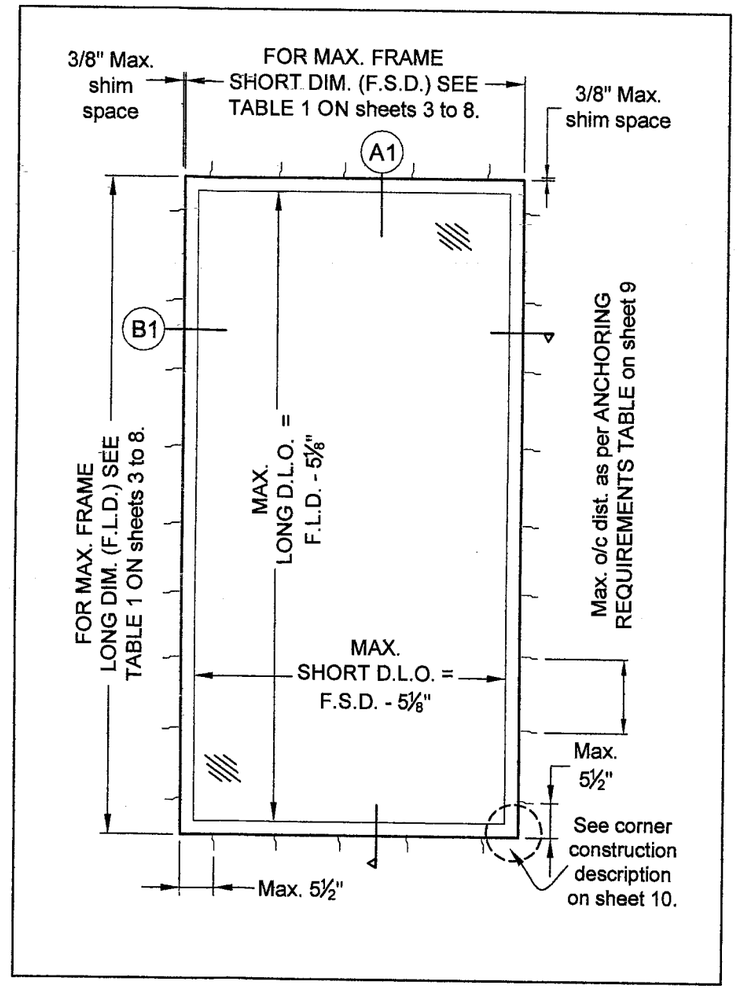

MQ WINDOWS OF EUROPE AND THE AMERICAS
1855 GRIFFIN ROAD, SUITE A-271
DANIA, FL 33004

JS SERIES DIRECT GLAZED WOOD WINDOW - LMI

Drawing no.: JS-5-DS	
Scale: NONE	Drawn by: S. Marcotte
Date drawn: 04/05/06	Date revised: 01/04/07
File: JS-5-DS-dwg	Page: 1/10

TILTECO INC.
TILLIT TESTING & ENGINEERING COMPANY
6355 NW 36th STREET, STE. 305
MIAMI, FLORIDA 33166
FL E.B. LICENSE No. 0006719

WALTER A. TILLIT JR., P.E.
STRUCTURAL ENGINEER
FL. LIC.NO. 44167

JAN 05 2007

Approved as complying with the Florida Building Code
Date MARCH 29, 2007
NOA# 06-1031.04
Miami Dade Product Control Division
By Manuel Perez

CROSS SECTION VIEWS

A1 HEAD & SILL

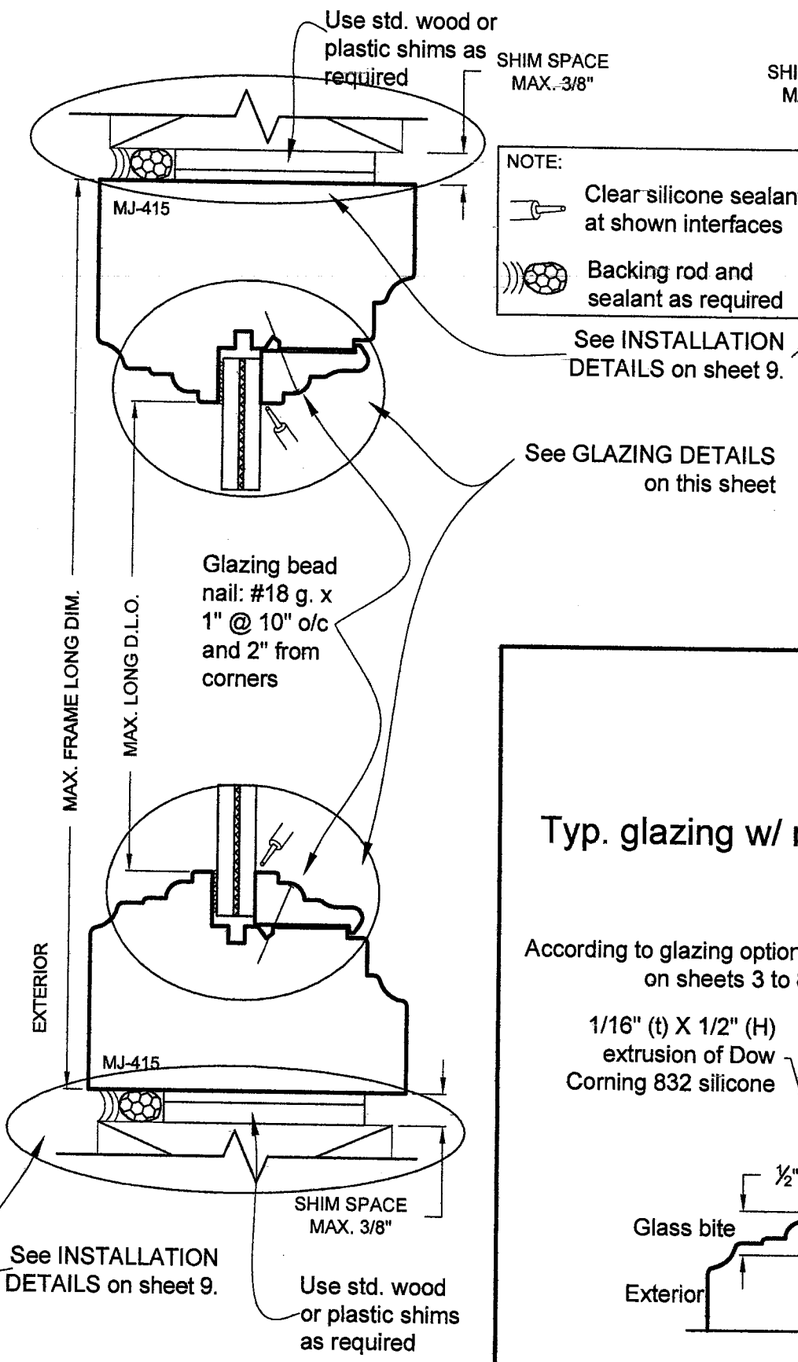

NOTE:

- Clear silicone sealant at shown interfaces
- Backing rod and sealant as required

B1 JAMBS

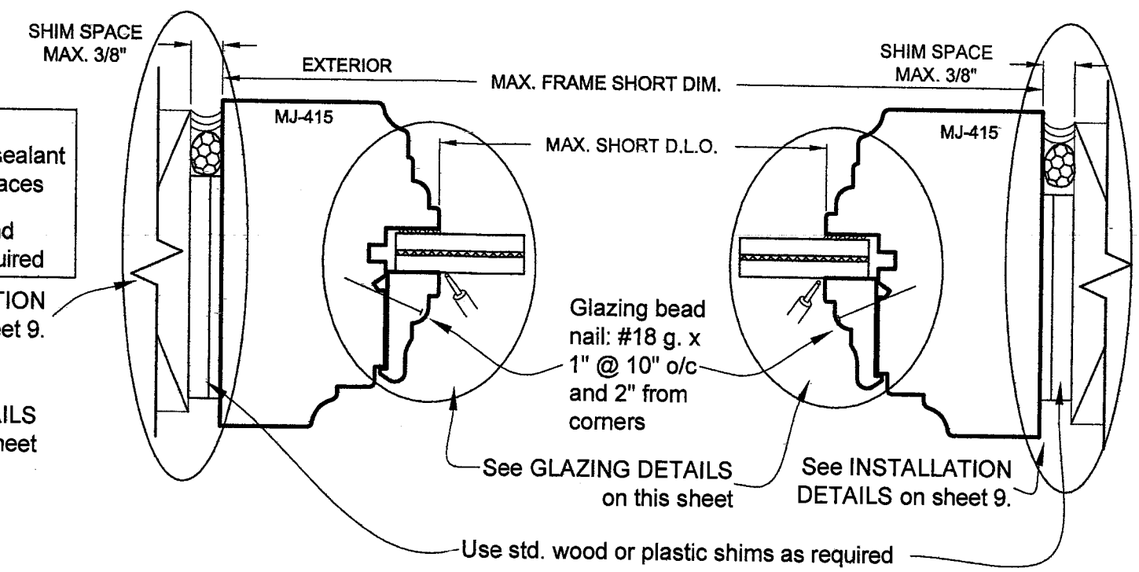

GLAZING DETAILS

Typ. glazing w/ monolithic laminated glass

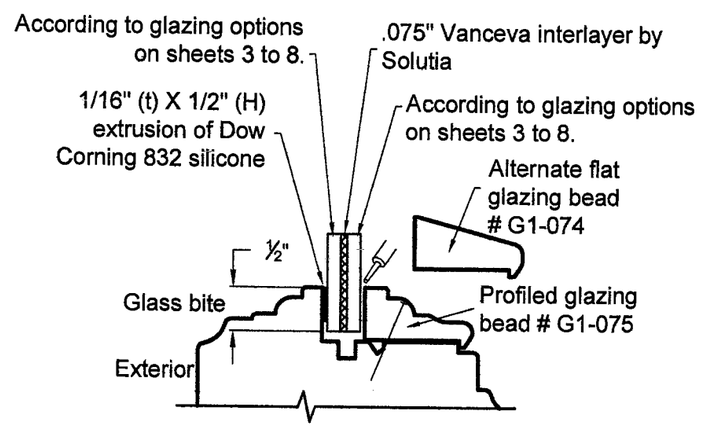

Typ. glazing w/ double insulated glass

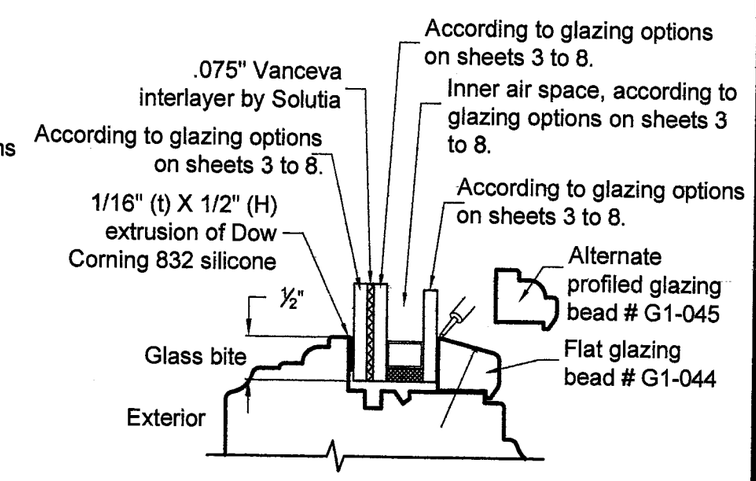

MQ WINDOWS OF EUROPE AND THE AMERICAS
1855 GRIFFIN ROAD, SUITE A-271
DANIA, FL 33004

JS SERIES DIRECT GLAZED WOOD WINDOW - LMI

Drawing no.: JS-5-DS	
Scale: NONE	Drawn by: S. Marcotte
Date drawn: 04/05/06	Date revised: 01/04/07
File: JS-5-DS-dwg	Page: 2/10

TILTECO INC.
TILLIT TESTING & ENGINEERING COMPANY
6355 NW 36th STREET, STE. 305
MIAMI, FLORIDA 33166
FL E.B. LICENSE No. 0006719

WALTER A. TILLIT JR., P.E.
STRUCTURAL ENGINEER
FL. LIC.NO. 44167

JAN 05 2007

Approved as complying with the Florida Building Code
Date MARCH 29 2007
NOA# 06-1031.04
Miami Dade Product Control Division
By

GLAZING OPTIONS

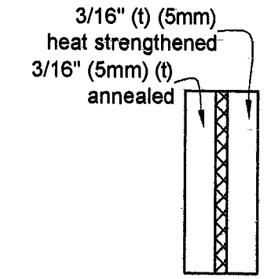

Option A

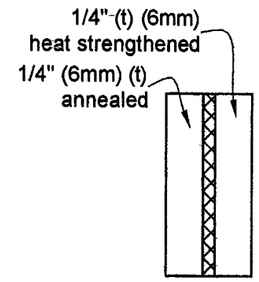

Option B

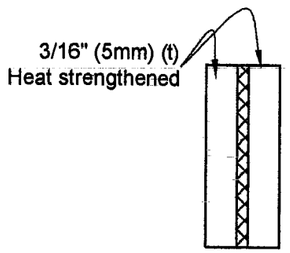

Option C

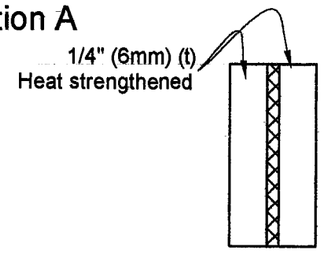

Option D

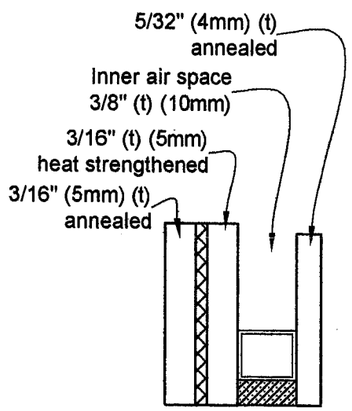

Option A1

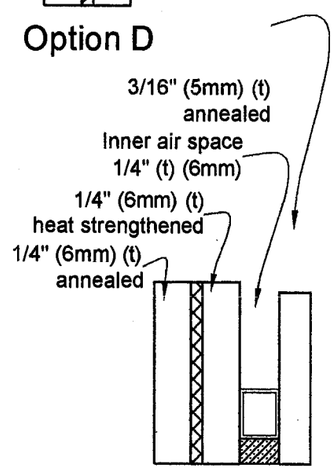

Option B1

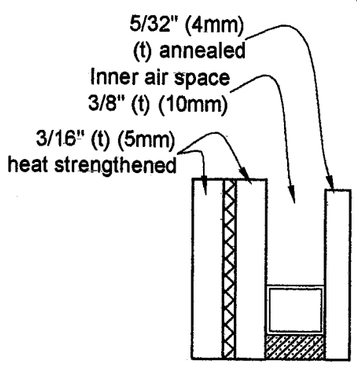

Option C1

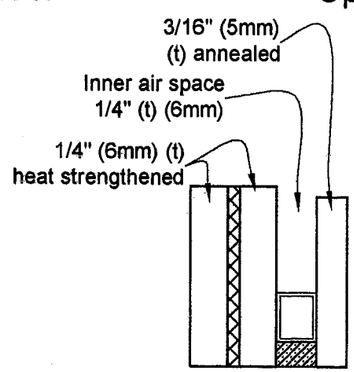

Option D1

TABLE 1: ALLOWABLE DESIGN PRESSURE ACCORDING TO FRAME DIMENSIONS

Max. Frame Long Dim. (in.)	Max. Frame Short Dim. (in.)	Allowable Pressure (psf)							
		w / Non-IG glazing				w / IG glazing			
		Glass Option A	Glass Option B	Glass Option C	Glass Option D	Glass Option A1	Glass Option B1	Glass Option C1	Glass Option D1
122.5	64	+37.4 / -37.4	+44.2 / -44.2	+65 / -74.6	+65 / -85	+36 / -36	+42 / -42	+65 / -76.1	+65 / -85
	58	+39.3 / -39.3	+47.8 / -47.8	+65 / -78.7	+65 / -85	+38 / -38	+45.4 / -45.4	+65 / -80.2	+65 / -85
	52	+42.7 / -42.7	+53 / -53	+65 / -85	+65 / -85	+41.3 / -41.3	+50.4 / -50.4	+65 / -85	+65 / -85
	46	+47.5 / -47.5	+60.3 / -60.3	+65 / -85	+65 / -85	+45.9 / -45.9	+57.3 / -57.3	+65 / -85	+65 / -85
	40	+55.4 / -55.4	+65 / -72.8	+65 / -85	+65 / -85	+53.6 / -53.6	+65 / -69.2	+65 / -85	+65 / -85
	34	+65 / -71.4	+65 / -85	+65 / -85	+65 / -85	+65 / -69	+65 / -85	+65 / -85	+65 / -85
	28	+65 / -85	+65 / -85	+65 / -85	+65 / -85	+65 / -85	+65 / -85	+65 / -85	+65 / -85
110	64	+41.2 / -41.2	+49.5 / -49.5	+65/ -82.4	+65/ -85	+39.8 / -39.8	+47 / -47	+65/ -85	+65/ -85
	58	+43.3 / -43.3	+52.1 / -52.1	+65 / -85	+65 / -85	+41.9 / -41.9	+49.6 / -49.6	+65 / -85	+65 / -85
	52	+46.6 / -46.6	+58 / -58	+65 / -85	+65 / -85	+45 / -45	+55.2 / -55.2	+65 / -85	+65 / -85
	46	+50.9 / -50.9	+65 / -65	+65 / -85	+65 / -85	+49.2 / -49.2	+61.8 / -61.8	+65 / -85	+65 / -85
	40	+58.6 / -58.6	+65 / -77	+65 / -85	+65 / -85	+56.7 / -56.7	+65 / -73.2	+65 / -85	+65 / -85
	34	+65 / -73.7	+65 / -85	+65 / -85	+65 / -85	+65 / -71.3	+65 / -85	+65 / -85	+65 / -85
	28	+65 / -85	+65 / -85	+65 / -85	+65 / -85	+65 / -85	+65 / -85	+65 / -85	+65 / -85
98	64	+47 / -47	+55.5 / -55.5	+65 / -85	+65 / -85	+45.4 / -45.4	+52.8 / -52.8	+65 / -85	+65 / -85
	58	+49 / -49	+59.5 / -59.5	+65 / -85	+65 / -85	+47.3 / -47.3	+56.5 / -56.5	+65 / -85	+65 / -85
	52	+51.2 / -51.2	+64.8 / -64.8	+65 / -85	+65 / -85	+49.5 / -49.5	+61.6 / -61.6	+65 / -85	+65 / -85
	46	+56.3 / -56.3	+65 / -72.5	+65 / -85	+65 / -85	+54.4 / -54.4	+65 / -68.9	+65 / -85	+65 / -85
	40	+62.3 / -62.3	+65 / -82.5	+65 / -85	+65 / -85	+60.1 / -60.1	+65 / -78.4	+65 / -85	+65 / -85
	34	+65 / -76.5	+65 / -85	+65 / -85	+65 / -85	+65 / -73.9	+65 / -85	+65 / -85	+65 / -85
	28	+65 / -85	+65 / -85	+65 / -85	+65 / -85	+65 / -85	+65 / -85	+65 / -85	+65 / -85
86	64	+52.7 / -52.7	+63.2 / -63.2	+65 / -85	+65 / -85	+50.9 / -50.9	+60.1 / -60.1	+65 / -85	+65 / -85
	58	+57.3 / -57.3	+65 / -68.3	+65 / -85	+65 / -85	+55.4 / -55.4	+64.9 / -64.9	+65 / -85	+65 / -85
	52	+61.1 / -61.1	+65 / -73.7	+65 / -85	+65 / -85	+59 / -59	+65 / -70.1	+65 / -85	+65 / -85
	46	+65 / -66	+65 / -80.5	+65 / -85	+65 / -85	+63.7 / -63.7	+65 / -76.5	+65 / -85	+65 / -85
	40	+65 / -72.6	+65 / -85	+65 / -85	+65 / -85	+65 / -70.2	+65 / -85	+65 / -85	+65 / -85
	34	+65 / -84.6	+65 / -85	+65 / -85	+65 / -85	+65 / -81.7	+65 / -85	+65 / -85	+65 / -85
	28	+65 / -85	+65 / -85	+65 / -85	+65 / -85	+65 / -85	+65 / -85	+65 / -85	+65 / -85
74	64	+61.3 / -61.3	+65 / -72.9	+65 / -82	+65 / -85	+59.2 / -59.2	+65 / -69.3	+65 / -85	+65 / -85
	58	+65/ -65.9	+65/ -77.2	+65 / -73	+65 / -85	+63.6 / -63.6	+65 / -73.4	+65 / -85	+65 / -85
	52	+65 / -71.3	+65 / -82.1	+65 / -79	+65 / -85	+65 / -68.9	+65 / -78.1	+65 / -85	+65 / -85
	46	+65 / -76.4	+65 / -85	+65 / -85	+65 / -85	+65 / -73.8	+65 / -85	+65 / -85	+65 / -85
	40	+65 / -81.5	+65 / -85	+65 / -85	+65 / -85	+65 / -78.8	+65 / -85	+65 / -85	+65 / -85
	34	+65 / -85	+65 / -85	+65 / -85	+65 / -85	+65 / -85	+65 / -85	+65 / -85	+65 / -85
	28	+65 / -85	+65 / -85	+65 / -85	+65 / -85	+65 / -85	+65 / -85	+65 / -85	+65 / -85
64	64	+65 / -71	+65 / -81.7	+65 / -85	+65 / -85	+65 / -68.6	+65 / -77.7	+65 / -85	+65 / -85
	58	+65 / -75.1	+65 / -85	+65 / -85	+65 / -85	+65 / -72.6	+65 / -82.6	+65 / -85	+65 / -85
	52	+65 / -79.8	+65 / -85	+65 / -85	+65 / -85	+65 / -77.1	+65 / -85	+65 / -85	+65 / -85
	46	+65 / -85	+65 / -85	+65 / -85	+65 / -85	+65 / -83	+65 / -85	+65 / -85	+65 / -85
	40	+65 / -85	+65 / -85	+65 / -85	+65 / -85	+65 / -85	+65 / -85	+65 / -85	+65 / -85
	34	+65 / -85	+65 / -85	+65 / -85	+65 / -85	+65 / -85	+65 / -85	+65 / -85	+65 / -85
	28	+65 / -85	+65 / -85	+65 / -85	+65 / -85	+65 / -85	+65 / -85	+65 / -85	+65 / -85
52	52	+65/ -85	+65 / -85	+65 / -85	+65 / -85	+58 / -58	+65 / -85	+65 / -85	+65 / -85
	46	+65 / -85	+65 / -85	+65 / -85	+65 / -85	+63 / -63	+65 / -85	+65 / -85	+65 / -85
	40	+65 / -85	+65 / -85	+65 / -85	+65 / -85	+65 / -74	+65 / -85	+65 / -85	+65 / -85
	34	+65 / -85	+65 / -85	+65 / -85	+65 / -85	+65 / -85	+65 / -85	+65 / -85	+65 / -85
	28	+65 / -85	+65 / -85	+65 / -85	+65 / -85	+65 / -85	+65 / -85	+65 / -85	+65 / -85
40	40	+65 / -85	+65 / -85	+65 / -85	+65 / -85	+65 / -85	+65 / -85	+65 / -85	+65 / -85
	34	+65 / -85	+65 / -85	+65 / -85	+65 / -85	+65 / -85	+65 / -85	+65 / -85	+65 / -85
	28	+65 / -85	+65 / -85	+65 / -85	+65 / -85	+65 / -85	+65 / -85	+65 / -85	+65 / -85
28	28	+65 / -85	+65 / -85	+65 / -85	+65 / -85	+65 / -85	+65 / -85	+65 / -85	+65 / -85

MQ WINDOWS OF EUROPE AND THE AMERICAS
1855 GRIFFIN ROAD,
SUITE A-271
DANIA, FL 33004

JS SERIES DIRECT GLAZED WOOD WINDOW - LMI

Drawing no.: JS-5-DS	
Scale: NONE	Drawn by: S. Marcotte
Date drawn: 04/05/06	Date revised: 06/18/06
File: JS-5-DS-dwg	Page: 3/10

TILTECO INC.
TILLIT TESTING & ENGINEERING COMPANY
6355 NW 36th STREET, STE. 305
MIAMI, FLORIDA 33166
FL E.B. LICENSE No. 0006719

WALTER A. TILLIT JR., P.E.
STRUCTURAL ENGINEER
FL. LIC.NO. 44167

JAN 05 2007

Approved as complying with the Florida Building Code
Date MARCH 29, 2007
NOA# 06-1031.04
Miami Dade Product Control Division
By Manuel Perez

GLAZING OPTIONS

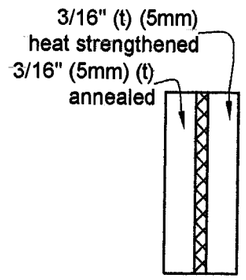

Option A

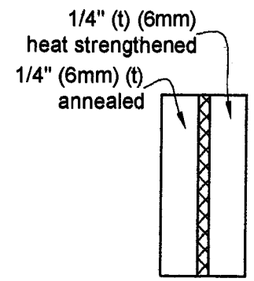

Option B

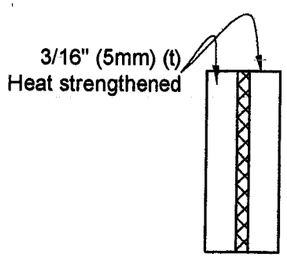

Option C

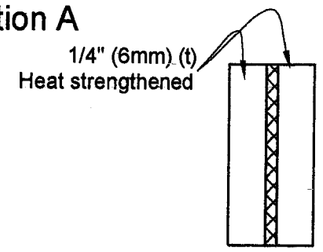

Option D

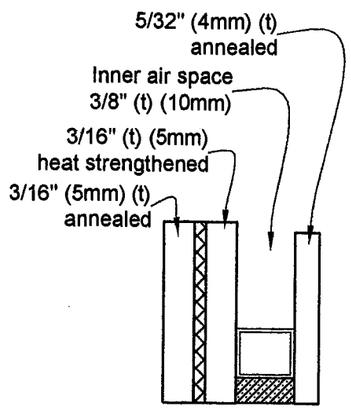

Option A1

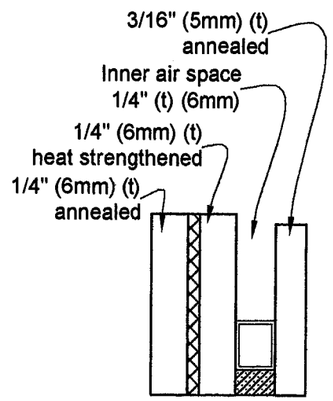

Option B1

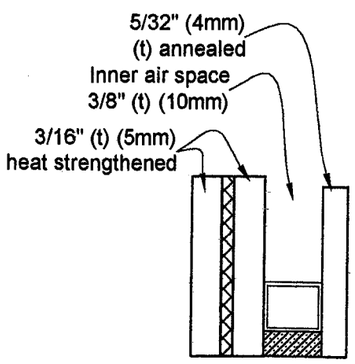

Option C1

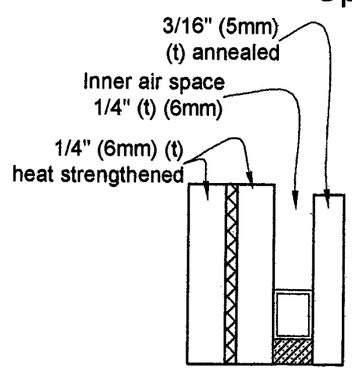

Option D1

TABLE 1: ALLOWABLE DESIGN PRESSURE ACCORDING TO FRAME DIMENSIONS

Max. Frame Short Dim. (in.)	Max. Frame Long Dim. (in.)	Allowable Pressure (psf)							
		w / Non-IG glazing				w / IG glazing			
		Glass Option A	Glass Option B	Glass Option C	Glass Option D	Glass Option A1	Glass Option B1	Glass Option C1	Glass Option D1
18	18	+65 / -85	+65 / -85	+65 / -85	+65 / -85	+65 / -85	+65 / -85	+65 / -85	+65 / -85
	24	+65 / -85	+65 / -85	+65 / -85	+65 / -85	+65 / -85	+65 / -85	+65 / -85	+65 / -85
	30	+65/ -85	+65/ -85	+65/ -85	+65/ -85	+65/ -85	+65/ -85	+65/ -85	+65/ -85
	36	+65 / -85	+65 / -85	+65 / -85	+65 / -85	+65 / -85	+65 / -85	+65 / -85	+65 / -85
	42	+65 / -85	+65 / -85	+65 / -85	+65 / -85	+65 / -85	+65 / -85	+65 / -85	+65 / -85
	48	+65 / -85	+65 / -85	+65 / -85	+65 / -85	+65 / -85	+65 / -85	+65 / -85	+65 / -85
	54	+65 / -85	+65 / -85	+65 / -85	+65 / -85	+65 / -85	+65 / -85	+65 / -85	+65 / -85
	60	+65/ -85	+65/ -85	+65/ -85	+65/ -85	+65/ -85	+65/ -85	+65/ -85	+65/ -85
	66	+65 / -85	+65 / -85	+65 / -85	+65 / -85	+65 / -85	+65 / -85	+65 / -85	+65 / -85
	72	+65 / -85	+65 / -85	+65 / -85	+65 / -85	+65 / -85	+65 / -85	+65 / -85	+65 / -85
	78	+65 / -85	+65 / -85	+65 / -85	+65 / -85	+65 / -85	+65 / -85	+65 / -85	+65 / -85
	84	+65 / -85	+65 / -85	+65 / -85	+65 / -85	+65 / -85	+65 / -85	+65 / -85	+65 / -85
	90	+65/ -85	+65/ -85	+65/ -85	+65/ -85	+65/ -85	+65/ -85	+65/ -85	+65/ -85
	96	+65 / -85	+65 / -85	+65 / -85	+65 / -85	+65 / -85	+65 / -85	+65 / -85	+65 / -85
	102	+65 / -85	+65 / -85	+65 / -85	+65 / -85	+65 / -85	+65 / -85	+65 / -85	+65 / -85
	108	+65 / -85	+65 / -85	+65 / -85	+65 / -85	+65 / -85	+65 / -85	+65 / -85	+65 / -85
	114	+65 / -85	+65 / -85	+65 / -85	+65 / -85	+65 / -85	+65 / -85	+65 / -85	+65 / -85
	120	+65/ -85	+65/ -85	+65/ -85	+65/ -85	+65/ -85	+65/ -85	+65/ -85	+65/ -85
	126	+65 / -85	+65 / -85	+65 / -85	+65 / -85	+65 / -85	+65 / -85	+65 / -85	+65 / -85
	132	+65 / -85	+65 / -85	+65 / -85	+65 / -85	+65 / -85	+65 / -85	+65 / -85	+65 / -85
	138	+65 / -85	+65 / -85	+65 / -85	+65 / -85	+65 / -85	+65 / -85	+65 / -85	+65 / -85
	144	+65 / -85	+65 / -85	+65 / -85	+65 / -85	+65 / -85	+65 / -85	+65 / -85	+65 / -85
24	24	+65 / -85	+65 / -85	+65 / -85	+65 / -85	+65 / -85	+65 / -85	+65 / -85	+65 / -85
	30	+65 / -85	+65 / -85	+65 / -85	+65 / -85	+65 / -85	+65 / -85	+65 / -85	+65 / -85
	36	+65/ -85	+65/ -85	+65/ -85	+65/ -85	+65/ -85	+65/ -85	+65/ -85	+65/ -85
	42	+65 / -85	+65 / -85	+65 / -85	+65 / -85	+65 / -85	+65 / -85	+65 / -85	+65 / -85
	48	+65 / -85	+65 / -85	+65 / -85	+65 / -85	+65 / -85	+65 / -85	+65 / -85	+65 / -85
	54	+65 / -85	+65 / -85	+65 / -85	+65 / -85	+65 / -85	+65 / -85	+65 / -85	+65 / -85
	60	+65 / -85	+65 / -85	+65 / -85	+65 / -85	+65 / -85	+65 / -85	+65 / -85	+65 / -85
	66	+65/ -85	+65/ -85	+65/ -85	+65/ -85	+65/ -85	+65/ -85	+65/ -85	+65/ -85
	72	+65 / -85	+65 / -85	+65 / -85	+65 / -85	+65 / -85	+65 / -85	+65 / -85	+65 / -85
	78	+65 / -85	+65 / -85	+65 / -85	+65 / -85	+65 / -85	+65 / -85	+65 / -85	+65 / -85
	84	+65 / -85	+65 / -85	+65 / -85	+65 / -85	+65 / -85	+65 / -85	+65 / -85	+65 / -85
	90	+65 / -85	+65 / -85	+65 / -85	+65 / -85	+65 / -85	+65 / -85	+65 / -85	+65 / -85
	96	+65/ -85	+65/ -85	+65/ -85	+65/ -85	+65/ -85	+65/ -85	+65/ -85	+65/ -85
	102	+65 / -85	+65 / -85	+65 / -85	+65 / -85	+65 / -85	+65 / -85	+65 / -85	+65 / -85
	108	+65 / -85	+65 / -85	+65 / -85	+65 / -85	+65 / -85	+65 / -85	+65 / -85	+65 / -85
	114	+65 / -85	+65 / -85	+65 / -85	+65 / -85	+65 / -85	+65 / -85	+65 / -85	+65 / -85
	120	+65 / -85	+65 / -85	+65 / -85	+65 / -85	+65 / -85	+65 / -85	+65 / -85	+65 / -85
	126	+65/ -85	+65/ -85	+65/ -85	+65/ -85	+65/ -85	+65/ -85	+65/ -85	+65/ -85
	132	+65 / -85	+65 / -85	+65 / -85	+65 / -85	+65 / -85	+65 / -85	+65 / -85	+65 / -85
	138	+65 / -85	+65 / -85	+65 / -85	+65 / -85	+65 / -85	+65 / -85	+65 / -85	+65 / -85
	144	+65 / -85	+65 / -85	+65 / -85	+65 / -85	+65 / -85	+65 / -85	+65 / -85	+65 / -85

MQ WINDOWS OF EUROPE AND THE AMERICAS
1855 GRIFFIN ROAD,
SUITE A-271
DANIA, FL 33004

JS SERIES DIRECT GLAZED WOOD WINDOW - LMI

Drawing no.: JS-5-DS	
Scale: NONE	Drawn by: S. Marcotte
Date drawn: 04/05/06	Date revised: 09/27/06
File: JS-5-DS-dwg	Page: 4/10

TILLECO INC.
TILLIT TESTING & ENGINEERING COMPANY
6355 NW 36th STREET, STE. 305
MIAMI, FLORIDA 33166
FL E.B. LICENSE No. 0006719

WALTER A. TILLIT JR., P.E.
STRUCTURAL ENGINEER
FL. LIC.NO. 44167

JAN 05 2007

Approved as complying with the Florida Building Code
Date MARCH 29, 2007
NOA# 06-1031.04
Miami Dade Product Control Division
By: Manuel Perez

GLAZING OPTIONS

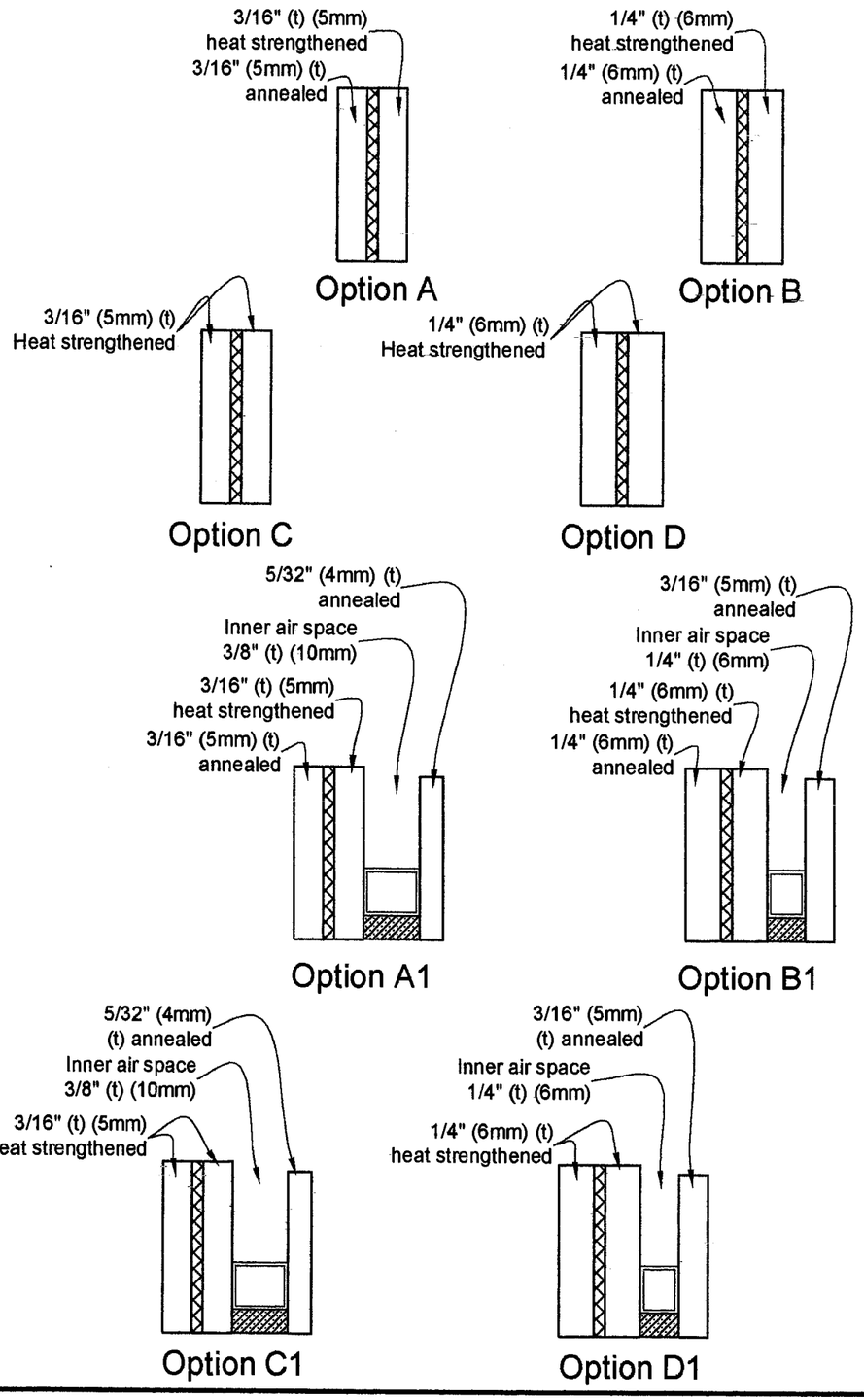

TABLE 1: ALLOWABLE DESIGN PRESSURE ACCORDING TO FRAME DIMENSIONS

Max. Frame Short Dim. (in.)	Max. Frame Long Dim. (in.)	Allowable Pressure (psf)							
		w / Non-IG glazing				w / IG glazing			
		Glass Option A	Glass Option B	Glass Option C	Glass Option D	Glass Option A1	Glass Option B1	Glass Option C1	Glass Option D1
30	30	+65 / -85	+65 / -85	+65 / -85	+65 / -85	+65 / -85	+65 / -85	+65 / -85	+65 / -85
	36	+65 / -85	+65 / -85	+65 / -85	+65 / -85	+65 / -85	+65 / -85	+65 / -85	+65 / -85
	42	+65 / -85	+65 / -85	+65 / -85	+65 / -85	+65 / -85	+65 / -85	+65 / -85	+65 / -85
	48	+65 / -85	+65 / -85	+65 / -85	+65 / -85	+65 / -85	+65 / -85	+65 / -85	+65 / -85
	54	+65 / -85	+65 / -85	+65 / -85	+65 / -85	+65 / -85	+65 / -85	+65 / -85	+65 / -85
	60	+65 / -85	+65 / -85	+65 / -85	+65 / -85	+65 / -85	+65 / -85	+65 / -85	+65 / -85
	66	+65 / -85	+65 / -85	+65 / -85	+65 / -85	+65 / -85	+65 / -85	+65 / -85	+65 / -85
	72	+65 / -85	+65 / -85	+65 / -85	+65 / -85	+65 / -85	+65 / -85	+65 / -85	+65 / -85
	78	+65 / -85	+65 / -85	+65 / -85	+65 / -85	+65 / -85	+65 / -85	+65 / -85	+65 / -85
	84	+65 / -85	+65 / -85	+65 / -85	+65 / -85	+65 / -85	+65 / -85	+65 / -85	+65 / -85
	90	+65 / -85	+65 / -85	+65 / -85	+65 / -85	+65 / -85	+65 / -85	+65 / -85	+65 / -85
	96	+65 / -85	+65 / -85	+65 / -85	+65 / -85	+65 / -85	+65 / -85	+65 / -85	+65 / -85
	102	+65 / -85	+65 / -85	+65 / -85	+65 / -85	+65 / -85	+65 / -85	+65 / -85	+65 / -85
	108	+65 / -85	+65 / -85	+65 / -85	+65 / -85	+65 / -85	+65 / -85	+65 / -85	+65 / -85
	114	+65 / -85	+65 / -85	+65 / -85	+65 / -85	+65 / -85	+65 / -85	+65 / -85	+65 / -85
	120	+65 / -85	+65 / -85	+65 / -85	+65 / -85	+65 / -83.6	+65 / -85	+65 / -85	+65 / -85
	126	+65 / -85	+65 / -85	+65 / -85	+65 / -85	+65 / -84	+65 / -85	+65 / -85	+65 / -85
	132	+65 / -85	+65 / -85	+65 / -85	+65 / -85	+65 / -84	+65 / -85	+65 / -85	+65 / -85
	138	+65 / -85	+65 / -85	+65 / -85	+65 / -85	+65 / -83.2	+65 / -85	+65 / -85	+65 / -85
	144	+65 / -84.6	+65 / -85	+65 / -85	+65 / -85	+65 / -81.7	+65 / -85	+65 / -85	+65 / -85
36	36	+65 / -85	+65 / -85	+65 / -85	+65 / -85	+65 / -85	+65 / -85	+65 / -85	+65 / -85
	42	+65 / -85	+65 / -85	+65 / -85	+65 / -85	+65 / -85	+65 / -85	+65 / -85	+65 / -85
	48	+65 / -85	+65 / -85	+65 / -85	+65 / -85	+65 / -85	+65 / -85	+65 / -85	+65 / -85
	54	+65 / -85	+65 / -85	+65 / -85	+65 / -85	+65 / -85	+65 / -85	+65 / -85	+65 / -85
	60	+65 / -85	+65 / -85	+65 / -85	+65 / -85	+65 / -85	+65 / -85	+65 / -85	+65 / -85
	66	+65 / -85	+65 / -85	+65 / -85	+65 / -85	+65 / -85	+65 / -85	+65 / -85	+65 / -85
	72	+65 / -85	+65 / -85	+65 / -85	+65 / -85	+65 / -85	+65 / -85	+65 / -85	+65 / -85
	78	+65 / -84.8	+65 / -85	+65 / -85	+65 / -85	+65 / -81.9	+65 / -85	+65 / -85	+65 / -85
	84	+65 / -80.9	+65 / -85	+65 / -85	+65 / -85	+65 / -78.2	+65 / -85	+65 / -85	+65 / -85
	90	+65 / -76.3	+65 / -85	+65 / -85	+65 / -85	+65 / -73.8	+65 / -85	+65 / -85	+65 / -85
	96	+65 / -72.8	+65 / -85	+65 / -85	+65 / -85	+65 / -70.3	+65 / -85	+65 / -85	+65 / -85
	102	+65 / -70	+65 / -85	+65 / -85	+65 / -85	+65 / -67.3	+65 / -85	+65 / -85	+65 / -85
	108	+65 / -67.7	+65 / -85	+65 / -85	+65 / -85	+65 / -65.5	+65 / -83.4	+65 / -85	+65 / -85
	114	+65 / -66	+65 / -85	+65 / -85	+65 / -85	+63.8 / -63.8	+65 / -81.6	+65 / -85	+65 / -85
	120	+64.6 / -64.6	+65 / -84.7	+65 / -85	+65 / -85	+62.4 / -62.4	+65 / -80.5	+65 / -85	+65 / -85
	126	+63.1 / -63.1	+65 / -83.5	+65 / -85	+65 / -85	+61 / -61	+65 / -79.4	+65 / -85	+65 / -85
	132	+62.4 / -62.4	+65 / -83.5	+65 / -85	+65 / -85	+60.3 / -60.3	+65 / -79.4	+65 / -85	+65 / -85
	138	+61.6 / -61.6	+65 / -83.1	+65 / -85	+65 / -85	+59.5 / -59.5	+65 / -79	+65 / -85	+65 / -85
	144	+61.1 / -61.1	+65 / -83.1	+65 / -85	+65 / -85	+59 / -59	+65 / -79	+65 / -85	+65 / -85

MQ WINDOWS OF EUROPE AND THE AMERICAS
1855 GRIFFIN ROAD,
SUITE A-271
DANIA, FL 33004

JS SERIES DIRECT GLAZED WOOD WINDOW - LMI

Drawing no.: JS-5-DS	
Scale: NONE	Drawn by: S. Marcotte
Date drawn: 04/05/06	Date revised: 06/18/06
File: JS-5-DS-dwg	Page: 5/10

TILTECO INC.
TILLIT TESTING & ENGINEERING COMPANY
6355 NW 36th STREET, STE. 305
MIAMI, FLORIDA 33166
FL E.B. LICENSE No. 0006719

WALTER A. TILLIT JR., P.E.
STRUCTURAL ENGINEER
FL. LIC.NO. 44167

JAN 05 2007

Approved as complying with the Florida Building Code
Date MARCH 29, 2007
NOA# 06-1031.04
Miami Dade Product Control Division
By

GLAZING OPTIONS

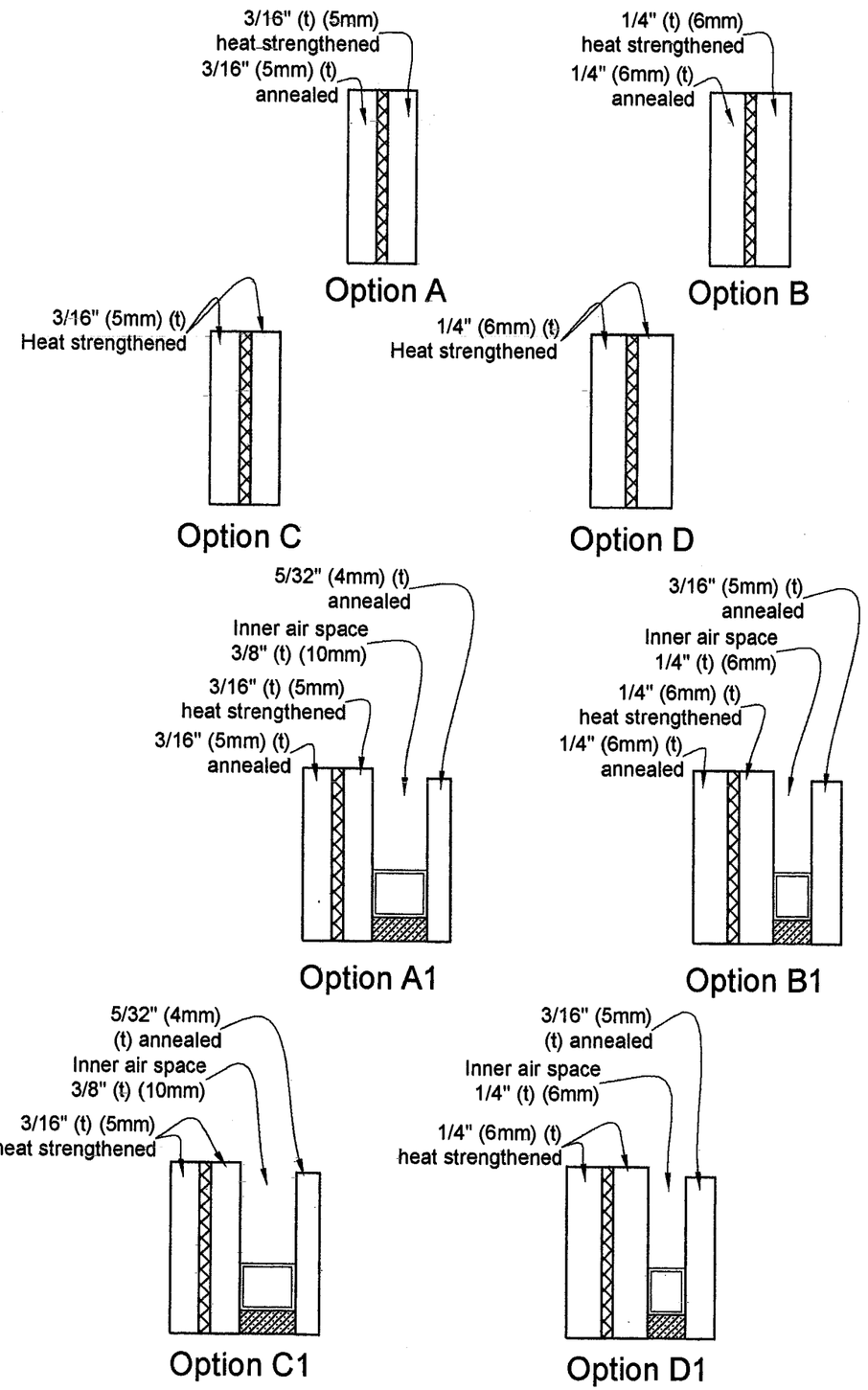

TABLE 1: ALLOWABLE DESIGN PRESSURE ACCORDING TO FRAME DIMENSIONS

Max. Frame Short Dim. (in.)	Max. Frame Long Dim. (in.)	Allowable Pressure (psf)							
		w / Non-IG glazing				w / IG glazing			
		Glass Option A	Glass Option B	Glass Option C	Glass Option D	Glass Option A1	Glass Option B1	Glass Option C1	Glass Option D1
42	42	+65 / -85	+65 / -85	+65 / -85	+65 / -85	+65 / -85	+65 / -85	+65 / -85	+65 / -85
	48	+65 / -85	+65 / -85	+65 / -85	+65 / -85	+65 / -85	+65 / -85	+65 / -85	+65 / -85
	54	+65 / -85	+65 / -85	+65 / -85	+65 / -85	+65 / -85	+65 / -85	+65 / -85	+65 / -85
	60	+65 / -85	+65 / -85	+65 / -85	+65 / -85	+65 / -85	+65 / -85	+65 / -85	+65 / -85
	66	+65 / -85	+65 / -85	+65 / -85	+65 / -85	+65 / -85	+65 / -85	+65 / -85	+65 / -85
	72	+65 / -81.4	+65 / -85	+65 / -85	+65 / -85	+65 / -78.7	+65 / -85	+65 / -85	+65 / -85
	78	+65 / -76.4	+65 / -85	+65 / -85	+65 / -85	+65 / -73.8	+65 / -85	+65 / -85	+65 / -85
	84	+65 / -71.5	+65 / -85	+65 / -85	+65 / -85	+65 / -69.1	+65 / -85	+65 / -85	+65 / -85
	90	+65 / -66.4	+65 / -83.3	+65 / -85	+65 / -85	+64.1 / -64.1	+65 / -79.2	+65 / -85	+65 / -85
	96	+61.6 / -61.6	+65 / -79.9	+65 / -85	+65 / -85	+59.5 / -59.5	+65 / -76	+65 / -85	+65 / -85
	102	+58.3 / -58.3	+65 / -76.6	+65 / -85	+65 / -85	+56.3 / -56.3	+65 / -72.8	+65 / -85	+65 / -85
	108	+56 / -56	+65 / -73.6	+65 / -85	+65 / -85	+54.1 / -54.1	+65 / -70	+65 / -85	+65 / -85
	114	+53.9 / -53.9	+65 / -70.7	+65 / -85	+65 / -85	+52.1 / -52.1	+65 / -67.2	+65 / -85	+65 / -85
	120	+52.2 / -52.2	+65 / -68.7	+65 / -85	+65 / -85	+50.4 / -50.4	+65 / -65.3	+65 / -85	+65 / -85
	126	+50.9 / -50.9	+65 / -66.8	+65 / -85	+65 / -85	+49.2 / -49.2	+63.5 / -63.5	+65 / -85	+65 / -85
	132	+50.3 / -50.3	+65 / -65.8	+65 / -85	+65 / -85	+48.6 / -48.6	+62.6 / -62.6	+65 / -85	+65 / -85
	138	+49.5 / -49.5	+64.5 / -64.5	+65 / -85	+65 / -85	+47.8 / -47.8	+61.3 / -61.3	+65 / -85	+65 / -85
	144	+49 / -49	+63.6 / -63.6	+65 / -85	+65 / -85	+47.3 / -47.3	+60.5 / -60.5	+65 / -85	+65 / -85
48	48	+65 / -85	+65 / -85	+65 / -85	+65 / -85	+65 / -85	+65 / -85	+65 / -85	+65 / -85
	54	+65 / -85	+65 / -85	+65 / -85	+65 / -85	+65 / -85	+65 / -85	+65 / -85	+65 / -85
	60	+65 / -85	+65 / -85	+65 / -85	+65 / -85	+65 / -85	+65 / -85	+65 / -85	+65 / -85
	66	+65 / -81.4	+65 / -85	+65 / -85	+65 / -85	+65 / -78.7	+65 / -85	+65 / -85	+65 / -85
	72	+65 / -76.7	+65 / -85	+65 / -85	+65 / -85	+65 / -74.2	+65 / -85	+65 / -85	+65 / -85
	78	+65 / -71.2	+65 / -83.3	+65 / -85	+65 / -85	+65 / -68.8	+65 / -79.2	+65 / -85	+65 / -85
	84	+65 / -65.9	+65 / -79.3	+65 / -85	+65 / -85	+63.7 / -63.7	+65 / -75.4	+65 / -85	+65 / -85
	90	+60.3 / -60.3	+65 / -74.9	+65 / -85	+65 / -85	+58.3 / -58.3	+65 / -71.2	+65 / -85	+65 / -85
	96	+55.3 / -55.3	+65 / -71	+65 / -85	+65 / -85	+53.5 / -53.5	+65 / -67.5	+65 / -85	+65 / -85
	102	+51.8 / -51.8	+65 / -67.1	+65 / -85	+65 / -85	+50.1 / -50.1	+63.8 / -63.8	+65 / -85	+65 / -85
	108	+50 / -50	+63.2 / -63.2	+65 / -85	+65 / -85	+48.3 / -48.3	+60.1 / -60.1	+65 / -85	+65 / -85
	114	+48 / -48	+60.2 / -60.2	+65 / -85	+65 / -85	+46.4 / -46.4	+57.3 / -57.3	+65 / -85	+65 / -85
	120	+46.4 / -46.4	+58.2 / -58.2	+65 / -85	+65 / -85	+44.8 / -44.8	+55.3 / -55.3	+65 / -85	+65 / -85
	126	+44.7 / -44.7	+56.7 / -56.7	+65 / -85	+65 / -85	+43.2 / -43.2	+53.9 / -53.9	+65 / -85	+65 / -85
	132	+43 / -43	+55.2 / -55.2	+65 / -85	+65 / -85	+41.5 / -41.5	+52.5 / -52.5	+65 / -85	+65 / -85
	138	+41.1 / -41.1	+53.4 / -53.4	+65 / -82.2	+65 / -85	+39.7 / -39.7	+50.8 / -50.8	+65 / -83.9	+65 / -85
	144	+39.8 / -39.8	+52 / -52	+65 / -79.7	+65 / -85	+38.5 / -38.5	+49.4 / -49.4	+65 / -81.3	+65 / -85

MQ WINDOWS OF EUROPE AND THE AMERICAS
1855 GRIFFIN ROAD, SUITE A-271
DANIA, FL 33004

JS SERIES DIRECT GLAZED WOOD WINDOW - LMI

Drawing no.: JS-5-DS	
Scale: NONE	Drawn by: S. Marcotte
Date drawn: 04/05/06	Date revised: 06/18/06
File: JS-5-DS-dwg	Page: 6/10

TILTECO INC.
TILLIT TESTING & ENGINEERING COMPANY
6355 NW 36th STREET, STE. 305
MIAMI, FLORIDA 33166
FL E.B. LICENSE No. 0006719

WALTER A. TILLIT JR., P.E.
STRUCTURAL ENGINEER
FL. LIC.NO. 44167

JAN 05 2007

Approved as complying with the Florida Building Code
Date MARCH 29 2007
NOA# 06-1031.04
Miami Dade Product Control Division
By

GLAZING OPTIONS

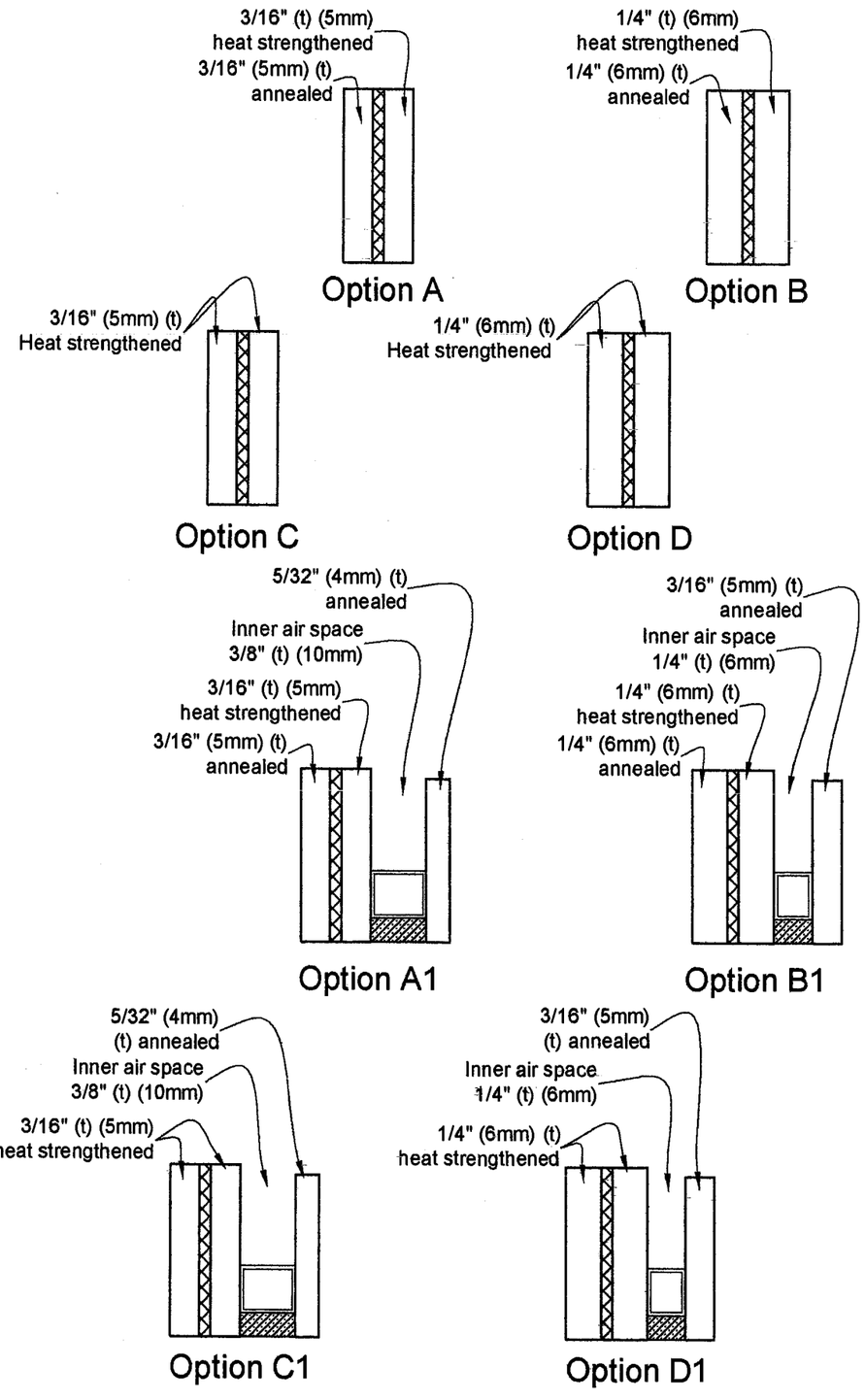

TABLE 1: ALLOWABLE DESIGN PRESSURE ACCORDING TO FRAME DIMENSIONS

Max. Frame Short Dim. (in.)	Max. Frame Long Dim. (in.)	Allowable Pressure (psf)							
		w / Non-IG glazing				w / IG glazing			
		Glass Option A	Glass Option B	Glass Option C	Glass Option D	Glass Option A1	Glass Option B1	Glass Option C1	Glass Option D1
54	54	+65 / -85	+65 / -85	+65 / -85	+65 / -85	+65 / -85	+65 / -85	+65 / -85	+65 / -85
	60	+65 / -82.7	+65 / -85	+65 / -85	+65 / -85	+65 / -79.9	+65 / -85	+65 / -85	+65 / -85
	66	+65 / -76.3	+65 / -85	+65 / -85	+65 / -85	+65 / -73.7	+65 / -84.7	+65 / -85	+65 / -85
	72	+65 / -71.1	+65 / -81.9	+65 / -85	+65 / -85	+65 / -68.7	+65 / -77.9	+65 / -85	+65 / -85
	78	+65 / -66.3	+65 / -77.5	+65 / -85	+65 / -85	+64.1 / -64.1	+65 / -73.7	+65 / -85	+65 / -85
	84	+61.4 / -61.4	+65 / -73.3	+65 / -85	+65 / -85	+59.3 / -59.3	+65 / -69.7	+65 / -85	+65 / -85
	90	+56 / -56	+65 / -68.4	+65 / -85	+65 / -85	+54.1 / -54.1	+65 / -65	+65 / -85	+65 / -85
	96	+51.4 / -51.4	+64 / -64	+65 / -85	+65 / -85	+49.7 / -49.7	+60.9 / -60.9	+65 / -85	+65 / -85
	102	+48.6 / -48.6	+60.3 / -60.3	+65 / -85	+65 / -85	+47 / -47	+57.3 / -57.3	+65 / -85	+65 / -85
	108	+45.9 / -45.9	+56.8 / -56.8	+65 / -85	+65 / -85	+44.4 / -44.4	+54 / -54	+65 / -85	+65 / -85
	114	+43.7 / -43.7	+53.7 / -53.7	+65 / -85	+65 / -85	+42.3 / -42.3	+51.1 / -51.1	+65 / -85	+65 / -85
	120	+41.9 / -41.9	+51.6 / -51.6	+65 / -83.8	+65 / -85	+40.5 / -40.5	+49.1 / -49.1	+65 / -85	+65 / -85
	126	+40.4 / -40.4	+50 / -50	+65 / -80.7	+65 / -85	+39 / -39	+47.6 / -47.6	+65 / -82.3	+65 / -85
	132	+38.7 / -38.7	+48.4 / -48.4	+65 / -77.3	+65 / -85	+37.3 / -37.3	+46 / -46	+65 / -78.8	+65 / -85
	138	+36.7 / -36.7	+46.7 / -46.7	+65 / -73.4	+65 / -82.1	+35.5 / -35.5	+44.4 / -44.4	+65 / -74.8	+65 / -82.1
	144	+35.3 / -35.3	+45.3 / -45.3	+65 / -70.6	+65 / -77.5	+34.1 / -34.1	+43 / -43	+65 / -72	+65 / -77.5
60	60	+65 / -78.6	+65 / -85	+65 / -85	+65 / -85	+65 / -76	+65 / -85	+65 / -85	+65 / -85
	66	+65 / -71.7	+65 / -82.4	+65 / -85	+65 / -85	+65 / -69.3	+65 / -78.3	+65 / -85	+65 / -85
	72	+65 / -66	+65 / -77.3	+65 / -85	+65 / -85	+63.7 / -63.7	+65 / -73.5	+65 / -85	+65 / -85
	78	+61.1 / -61.1	+65 / -72.5	+65 / -85	+65 / -85	+59 / -59	+65 / -69	+65 / -85	+65 / -85
	84	+57 / -57	+65 / -68	+65 / -85	+65 / -85	+55.1 / -55.1	+64.7 / -64.7	+65 / -85	+65 / -85
	90	+52.7 / -52.7	+63.2 / -63.2	+65 / -85	+65 / -85	+50.9 / -50.9	+60.1 / -60.1	+65 / -85	+65 / -85
	96	+49.3 / -49.3	+59.3 / -59.3	+65 / -85	+65 / -85	+47.6 / -47.6	+56.4 / -56.4	+65 / -85	+65 / -85
	102	+46.3 / -46.3	+55.5 / -55.5	+65 / -85	+65 / -85	+44.7 / -44.7	+52.8 / -52.8	+65 / -85	+65 / -85
	108	+43.4 / -43.4	+51.9 / -51.9	+65 / -85	+65 / -85	+41.9 / -41.9	+49.4 / -49.4	+65 / -85	+65 / -85
	114	+40.9 / -40.9	+49.4 / -49.4	+65 / -81.8	+65 / -85	+39.5 / -39.5	+46.9 / -46.9	+65 / -83.4	+65 / -85
	120	+39.2 / -39.2	+47 / -47	+65 / -78.3	+65 / -85	+37.8 / -37.8	+44.7 / -44.7	+65 / -79.9	+65 / -85
	126	+37.5 / -37.5	+45.2 / -45.2	+65 / -75.1	+65 / -85	+36.3 / -36.3	+42.9 / -42.9	+65 / -76.6	+65 / -85
	130	+36.4 / -36.4	+43.9 / -43.9	+65 / -72.8	+65 / -82	+35.2 / -35.2	+41.8 / -41.8	+65/ -74.2	+65 / -82

WINDOWS OF EUROPE AND THE AMERICAS
1855 GRIFFIN ROAD, SUITE A-271
DANIA, FL 33004

JS SERIES DIRECT GLAZED WOOD WINDOW - LMI

Drawing no.: JS-5-DS	
Scale: NONE	Drawn by: S. Marcotte
Date drawn: 04/05/06	Date revised: 06/18/06
File: JS-5-DS-dwg	Page: 7/10

TILTECO INC.
TILLIT TESTING & ENGINEERING COMPANY
6355 NW 36th STREET, STE. 305
MIAMI, FLORIDA 33166
FL E.B. LICENSE No. 0006719

WALTER A. TILLIT JR., P.E.
STRUCTURAL ENGINEER
FL. LIC.NO. 44167

JAN 05 2007

Approved as complying with the Florida Building Code
Date MARCH 29, 2007
NOA# 06-1031.04
Miami Dade Product Control Division
By

GLAZING OPTIONS

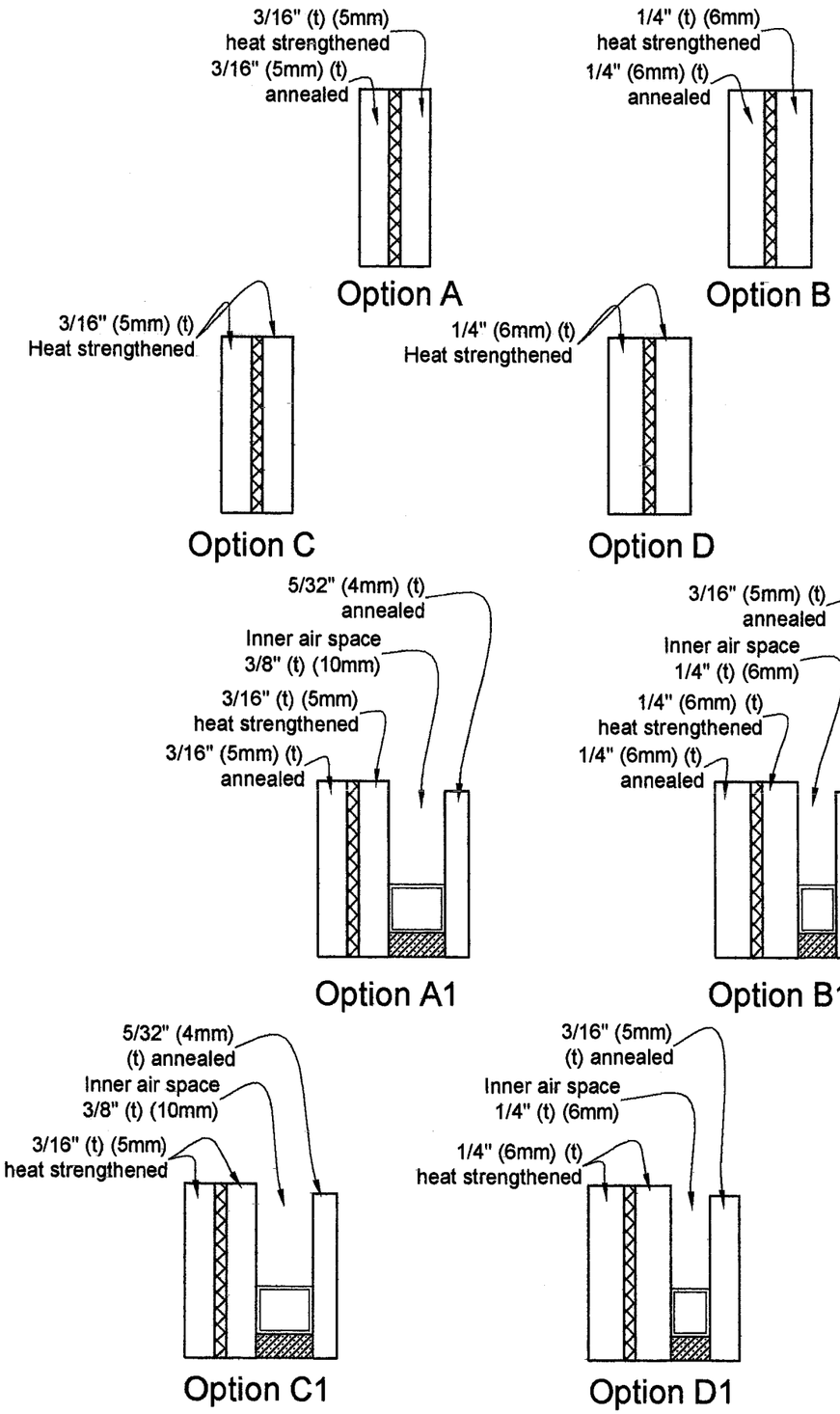

TABLE 1: ALLOWABLE DESIGN PRESSURE ACCORDING TO FRAME DIMENSIONS

Max. Frame Short Dim. (in.)	Max. Frame Long Dim. (in.)	Allowable Pressure (psf)							
		w / Non-IG glazing				w / IG glazing			
		Glass Option A	Glass Option B	Glass Option C	Glass Option D	Glass Option A1	Glass Option B1	Glass Option C1	Glass Option D1
66	66	+65 / -67.5	+65 / -78.7	+65 / -79.5	+65 / -79.5	+65 / -65.2	+65 / -74.9	+65 / -79.5	+65 / -79.5
	72	+61.6 / -61.6	+65 / -73.3	+65 / -79.5	+65 / -79.5	+59.5 / -59.5	+65 / -69.7	+65 / -79.5	+65 / -79.5
	78	+57.1 / -57.1	+65 / -68.2	+65 / -79.5	+65 / -79.5	+55.2 / -55.2	+64.8 / -64.8	+65 / -79.5	+65 / -79.5
	84	+52.7 / -52.7	+63.2 / -63.2	+65 / -79.5	+65 / -79.5	+51 / -51	+60.1 / -60.1	+65 / -79.5	+65 / -79.5
	90	+49.5 / -49.5	+59.1 / -59.1	+65 / -79.5	+65 / -79.5	+47.9 / -47.9	+56.2 / -56.2	+65 / -79.5	+65 / -79.5
	96	+47 / -47	+55.5 / -55.5	+65 / -79.5	+65 / -79.5	+45.4 / -45.4	+52.7 / -52.7	+65 / -79.5	+65 / -79.5
	102	+44.2 / -44.2	+51.9 / -51.9	+65 / -79.5	+65 / -79.5	+42.7 / -42.7	+49.3 / -49.3	+65 / -79.5	+65 / -79.5
	108	+41.4 / -41.4	+49.5 / -49.5	+65 / -79.5	+65 / -79.5	+40 / -40	+47.1 / -47.1	+65 / -79.5	+65 / -79.5
	114	+39.3 / -39.3	+46.8 / -46.8	+65 / -78.5	+65 / -79.5	+37.9 / -37.9	+44.5 / -44.5	+65 / -79.5	+65 / -79.5
	118	+38 / -38	+45.2 / -45.2	+65 / -76.1	+65 / -79.5	+36.8 / -36.8	+43 / -43	+65 / -77.6	+65 / -79.5
72	72	+58.5 / -58.5	+65 / -67	+65 / -67	+65 / -67	+56.5 / -56.5	+65 / -66.4	+65 / -67	+65 / -67
	78	+53.7 / -53.7	+64.3 / -64.3	+65 / -67	+65 / -67	+51.8 / -51.8	+61.1 / -61.1	+65 / -67	+65 / -67
	84	+50.1 / -50.1	+60 / -60	+65 / -67	+65 / -67	+48.4 / -48.4	+57 / -57	+65 / -67	+65 / -67
	90	+46.9 / -46.9	+55.7 / -55.7	+65 / -67	+65 / -67	+45.3 / -45.3	+53 / -53	+65 / -67	+65 / -67
	96	+44.2 / -44.2	+52 / -52	+65 / -67	+65 / -67	+42.7 / -42.7	+49.5 / -49.5	+65 / -67	+65 / -67
	102	+41.6 / -41.6	+49.7 / -49.7	+65 / -67	+65 / -67	+40.2 / -40.2	+47.2 / -47.2	+65 / -67	+65 / -67
	108	+40.1 / -40.1	+47.6 / -47.6	+65 / -67	+65 / -67	+38.7 / -38.7	+45.2 / -45.2	+65 / -67	+65 / -67
78	78	+51.2 / -51.2	+57.1 / -57.1	+57.1 / -57.1	+57.1 / -57.1	+49.4 / -49.4	+57.1 / -57.1	+57.1 / -57.1	+57.1 / -57.1
	84	+47.9 / -47.9	+57.1 / -57.1	+57.1 / -57.1	+57.1 / -57.1	+46.3 / -46.3	+54.6 / -54.6	+57.1 / -57.1	+57.1 / -57.1
	90	+44.5 / -44.5	+52.9 / -52.9	+57.1 / -57.1	+57.1 / -57.1	+43 / -43	+50.3 / -50.3	+57.1 / -57.1	+57.1 / -57.1
	96	+41.6 / -41.6	+49.9 / -49.9	+57.1 / -57.1	+57.1 / -57.1	+40.2 / -40.2	+47.5 / -47.5	+57.1 / -57.1	+57.1 / -57.1
	100	+40.4 / -40.4	+48.2 / -48.2	+57.1 / -57.1	+57.1 / -57.1	+39.1 / -39.1	+45.8 / -45.8	+57.1 / -57.1	+57.1 / -57.1
84	84	+45.2 / -45.2	+49.2 / -49.2	+49.2 / -49.2	+49.2 / -49.2	+44.4 / -44.4	+49.2 / -49.2	+49.2 / -49.2	+49.2 / -49.2
	90	+42.3 / -42.3	+49.2 / -49.2	+49.2 / -49.2	+49.2 / -49.2	+40.9 / -40.9	+48.4 / -48.4	+49.2 / -49.2	+49.2 / -49.2
	93	+41.2 / -41.2	+49.2 / -49.2	+49.2 / -49.2	+49.2 / -49.2	+39.8 / -39.8	+47.1 / -47.1	+49.2 / -49.2	+49.2 / -49.2

WINDOWS OF EUROPE AND THE AMERICAS
1855 GRIFFIN ROAD, SUITE A-271
DANIA, FL 33004

JS SERIES DIRECT GLAZED WOOD WINDOW - LMI

Drawing no.: JS-5-DS	
Scale: NONE	Drawn by: S. Marcotte
Date drawn: 04/05/06	Date revised: 06/18/06
File: JS-5-DS-dwg	Page: 8/10

TILLECO INC.
TILLIT TESTING & ENGINEERING COMPANY
6355 NW 36th STREET, STE. 305
MIAMI, FLORIDA 33166
FL E.B. LICENSE No. 0006719

WALTER A. TILLIT JR., P.E.
STRUCTURAL ENGINEER
FL. LIC.NO. 44167

JAN 0 5 2007

Approved as complying with the Florida Building Code
Date MARCH 29, 2007
NOA# 06-1031.04
Miami Dade Product Control Division
By Manuel Perez

INSTALLATION DETAILS

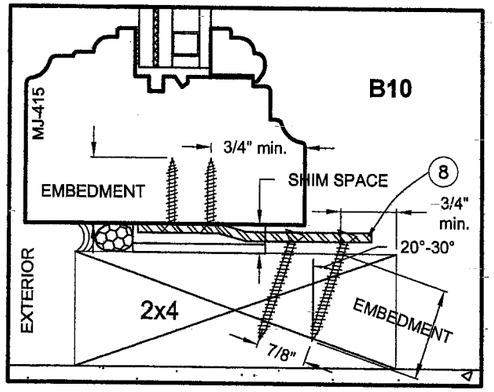

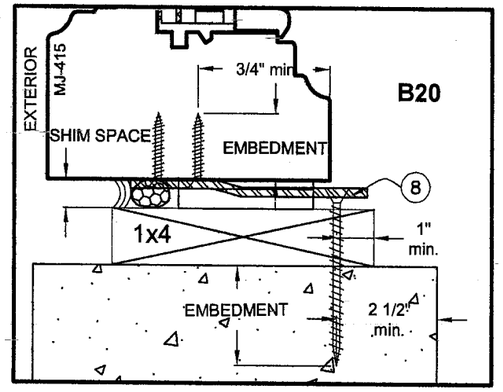

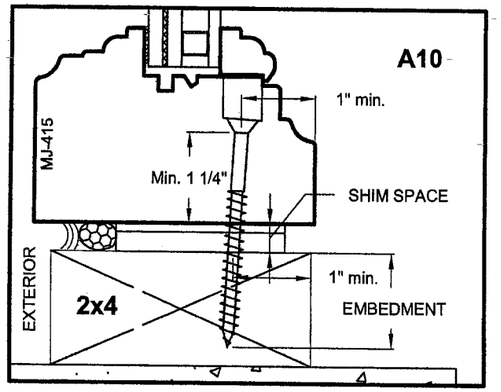

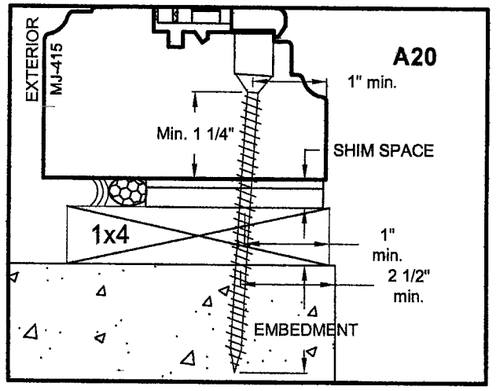

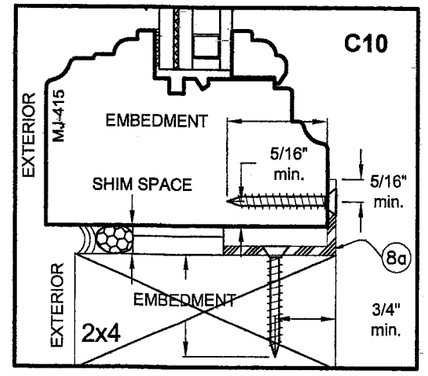

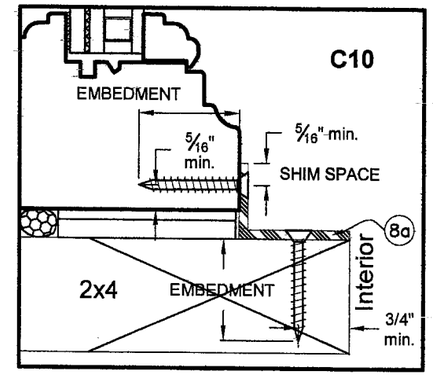

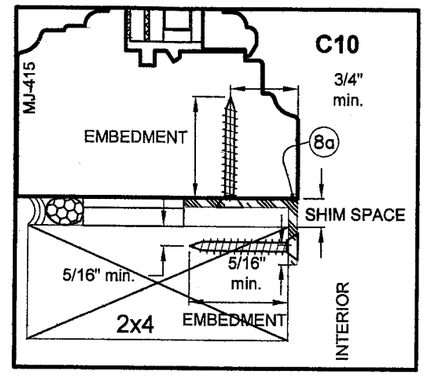

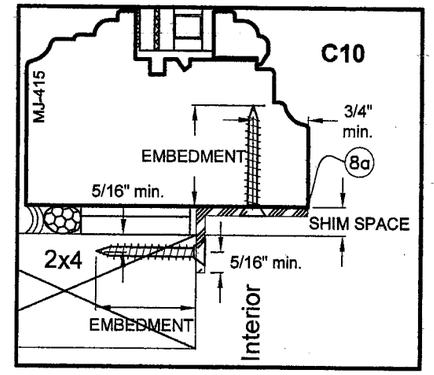

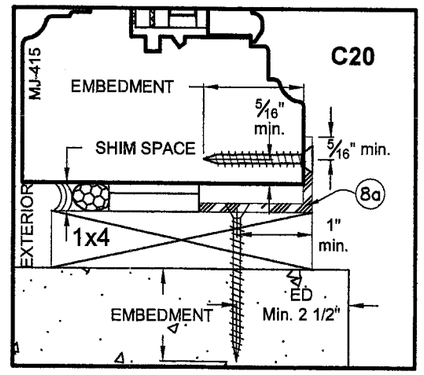

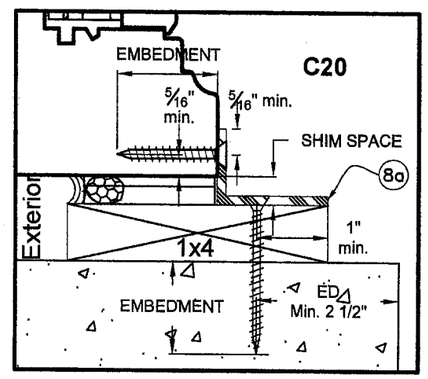

ANCHORING REQUIREMENTS TABLE

Mounting type	Substrate	Ref.	Fastener type	max. o/c	min. emb.	min. dist. from edge
PDF-FS-05/D Inst. Bracket	Window Frame	B10 B20	(2) #10 x 1" wood screw	10"	7/8"	3/4"
	2x wood buck	B10	(2) #12 x 1 1/2" wood screw	12"	1 1/4"	3/4"
	Concrete / Con. Block	B20	(1) 1/4" x 2 3/4" Elco/ Textron Tapcon screws	12"	1 3/8" / 1 1/4"	2 1/2"
1/8" Continuous Aluminum angle	Window Frame	C10 C20	(1) #12 x 1 1/2" wood screw	7 1/2"	1 1/4"	5/16"
	2x wood buck	C10	(1) #12 x 1 1/2" wood screw	8"	1 1/4"	3/4"
	Concrete / Con. Block	C20	(1) 1/4" x 2 3/4" Elco/ Textron Tapcon screws	7"	1 3/8" / 1 1/4"	2 1/2"
Direct Mount (shear screws)	2x wood buck	A10	(1) #14 x 2 3/4" wood screw	8"	1 1/4"	1"
	Concrete / Con. Block	A20	(1) 1/4" x 2 3/4" Elco/ Textron Tapcon screws	7 1/2"	1 3/8" / 1 1/4"	2 1/2"

GENERAL INSTALLATION NOTES

All PDF-FS-05D Installation brackets screwed to the window frame using (2) #10 x 1" all threaded wood screws w/ 7/8" min. embedment.

Spacing: All fasteners spacing is 5 1/2" from corners and o/c as specified in ANCHORING REQUIREMENTS TABLE on this sheet.

Shim Space: 3/8" MAX. @ head, jambs & sill. Use std shims behind as required.

Installation @ head & jambs identical to sill shown. Inst. brackets & angles may be positioned at interior or exterior side of the window.

MQ WINDOWS OF EUROPE AND THE AMERICAS
1855 GRIFFIN ROAD, SUITE A-271
DANIA, FL 33004

JS SERIES DIRECT GLAZED WOOD WINDOW - LMI

Drawing no.: JS-5-DS	
Scale: NONE	Drawn by: S. Marcotte
Date drawn: 04/05/06	Date revised: 01/04/07
File: JS-5-DS-dwg	Page: 9/10

TILLECO INC.
TILLIT TESTING & ENGINEERING COMPANY
6355 NW 36th STREET, STE. 305
MIAMI, FLORIDA 33166
FL E.B. LICENSE No. 0006719

WALTER A. TILLIT JR., P.E.
STRUCTURAL ENGINEER
FL. LIC.NO. 44167

JAN 0 5 2007

Approved as complying with the Florida Building Code
Date MARCH 29, 2007
NOA# 06-1031.04
Miami Dade Product Control Division
By Manuel Perez

WOOD PROFILES

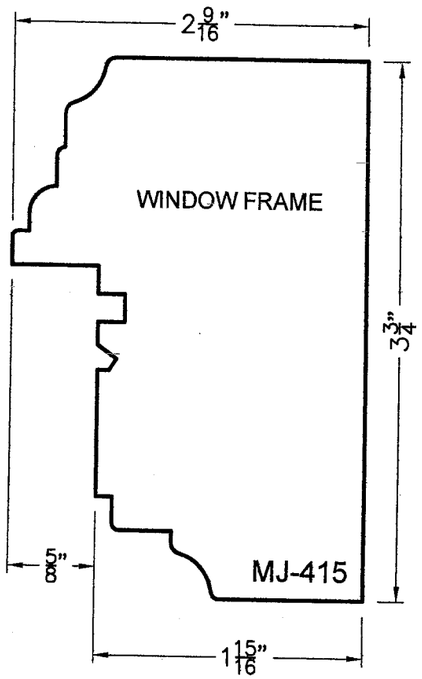

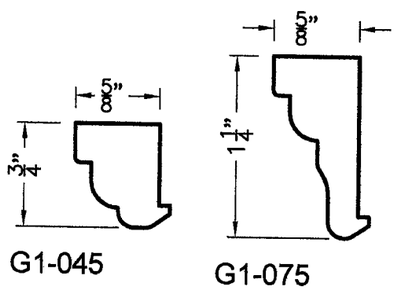

GLAZING BEADS

ACCESSORIES

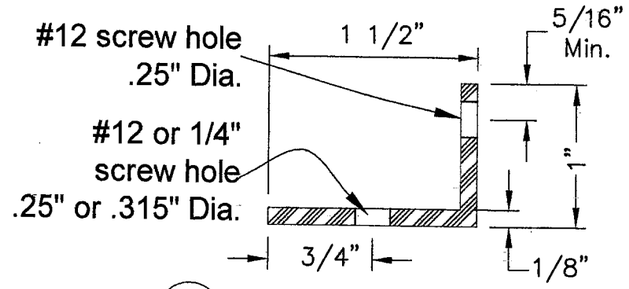

(8a) ALUMINUM INSTALLATION ANGLE

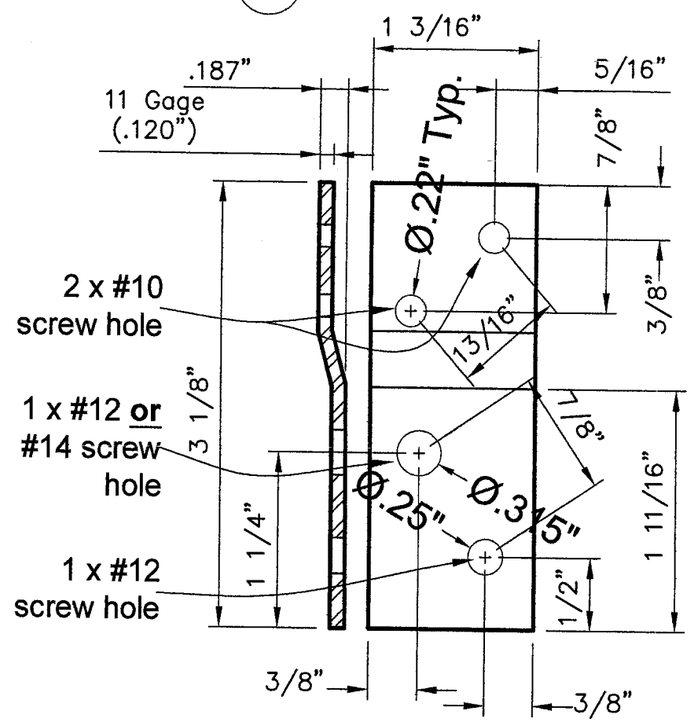

(8) PDF-FS-05/D INSTALLATION BRACKET

BILL OF MATERIALS		
REF.	ITEM DESCRIPTION	MANUFACTURER / NOTES
(8)	PDF-FS-05/D Installation bracket Gage 11 ASTM A653 SQ 33 G90 galvanized steel	Screwed to the window frame and to substrate as per ANCHORING REQUIREMENTS TABLE on sheet 4.
(8a)	Continuous aluminum angle, Alloy 6063-T5 1/8"(t) x 1" x 1 1/2"	Screwed to the window frame and to substrate as per ANCHORING REQUIREMENTS TABLE on sheet 4.

CORNERS CONSTRUCTION

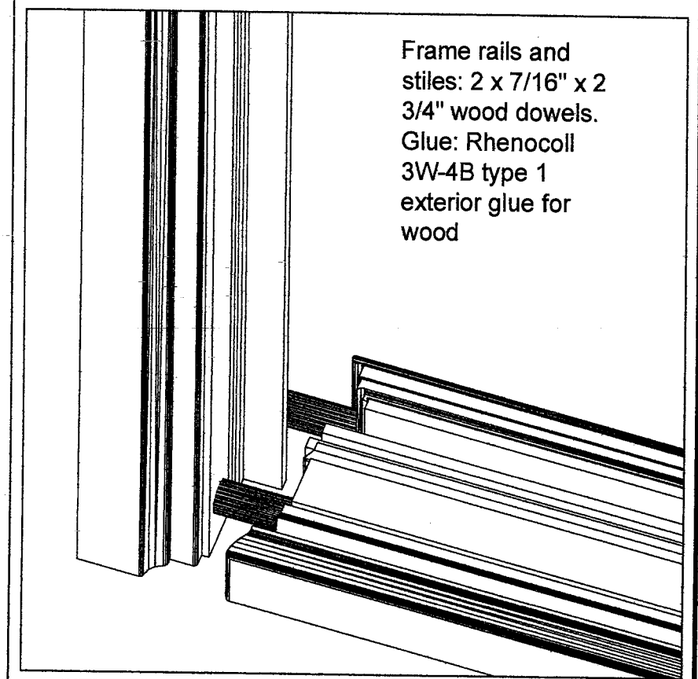

Frame rails and stiles: 2 x 7/16" x 2 3/4" wood dowels. Glue: Rhenocoll 3W-4B type 1 exterior glue for wood

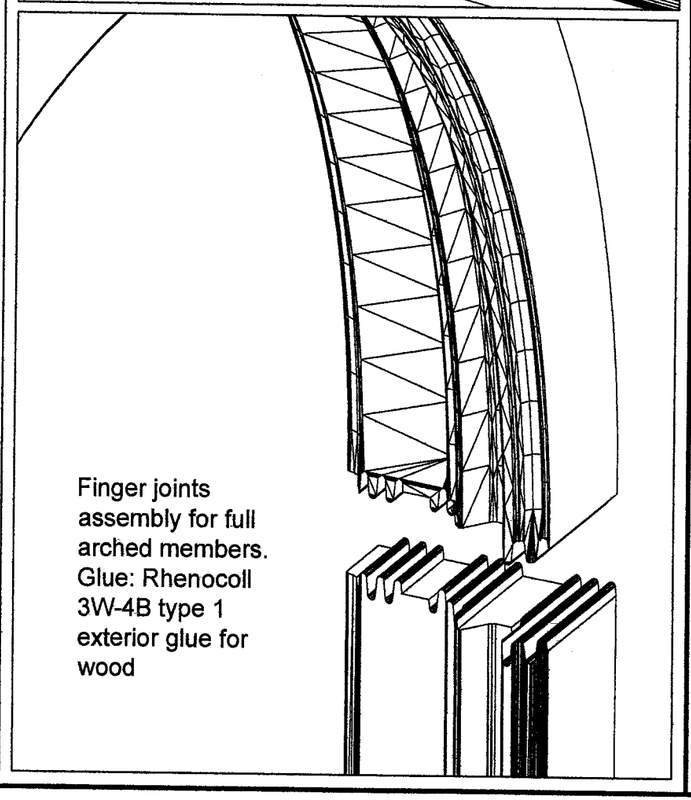

Finger joints assembly for full arched members. Glue: Rhenocoll 3W-4B type 1 exterior glue for wood

MQ WINDOWS OF EUROPE AND THE AMERICAS
1855 GRIFFIN ROAD, SUITE A-271
DANIA, FL 33004

JS SERIES DIRECT GLAZED WOOD WINDOW - LMI

Drawing no.: JS-5-DS	
Scale: NONE	Drawn by: S. Marcotte
Date drawn: 04/05/06	Date revised: 06/18/06
File: JS-5-DS-dwg	Page: 10/10

TILLECO INC.
TILLIT TESTING & ENGINEERING COMPANY
6355 NW 36th STREET, STE. 305
MIAMI, FLORIDA 33166
FL E.B. LICENSE No. 0006719

WALTER A. TILLIT JR., P.E.
STRUCTURAL ENGINEER
FL. LIC.NO. 44167

JAN 9 5 2007

Approved as complying with the Florida Building Code
Date MARCH 29, 2007
NOA# 06-1031.04
Miami Dade Product Control Division
By