MIAMI-DADE

BUILDING CODE COMPLIANCE OFFICE (BCCO)
PRODUCT CONTROL DIVISION

MIAMI-DADE COUNTY, FLORIDA
METRO-DADE FLAGLER BUILDING
140 WEST FLAGLER STREET, SUITE 1603
MIAMI, FLORIDA 33130-1563
(305) 375-2901 FAX (305) 375-2908

NOTICE OF ACCEPTANCE (NOA)

Total Roofing Systems, Inc.
2100A SW Conant Avenue
Port St. Lucie, FL. 34953

SCOPE:
This NOA is being issued under the applicable rules and regulations governing the use of construction materials. The documentation submitted has been reviewed by Miami-Dade County Product Control Division and accepted by the Board of Rules and Appeals (BORA) to be used in Miami Dade County and other areas where allowed by the Authority Having Jurisdiction (AHJ).

This NOA shall not be valid after the expiration date stated below. The Miami-Dade County Product Control Division (In Miami Dade County) and/or the AHJ (in areas other than Miami Dade County) reserve the right to have this product or material tested for quality assurance purposes. If this product or material fails to perform in the accepted manner, the manufacturer will incur the expense of such testing and the AHJ may immediately revoke, modify, or suspend the use of such product or material within their jurisdiction. BORA reserves the right to revoke this acceptance, if it is determined by Miami-Dade County Product Control Division that this product or material fails to meet the requirements of the applicable building code.

This product is approved as described herein, and has been designed to comply with the Florida Building Code and the High Velocity Hurricane Zone of the Florida Building Code.

DESCRIPTION: Englert Series 1300, TCS-II Metal Roof Panel

LABELING: Each unit shall bear a permanent label with the manufacturer's name or logo, city, state and following statement: "Miami-Dade County Product Control Approved", unless otherwise noted herein.

RENEWAL of this NOA shall be considered after a renewal application has been filed and there has been no change in the applicable building code negatively affecting the performance of this product.

TERMINATION of this NOA will occur after the expiration date or if there has been a revision or change in the materials, use, and/or manufacture of the product or process. Misuse of this NOA as an endorsement of any product, for sales, advertising or any other purposes shall automatically terminate this NOA. Failure to comply with any section of this NOA shall be cause for termination and removal of NOA.

ADVERTISEMENT: The NOA number preceded by the words Miami-Dade County, Florida, and followed by the expiration date may be displayed in advertising literature. If any portion of the NOA is displayed, then it shall be done in its entirety.

INSPECTION: A copy of this entire NOA shall be provided to the user by the manufacturer or its distributors and shall be available for inspection at the job site at the request of the Building Official.

This NOA consists of pages 1 through 5.
The submitted documentation was reviewed by Alex Tigera.

PRODUCT CONTROL ACCEPTED

NOA No.: 06-1101.02
Expiration Date: 11/17/11
Approval Date: 11/17/06

ROOFING ASSEMBLY APPROVAL

Category:	Roofing
Sub-Category:	Metal, Panels(Non-Structural)
Materials:	Steel
Deck Type:	Wood
Maximum Design Pressure	**–123.5 psf**

TRADE NAMES OF PRODUCTS MANUFACTURED OR LABELED BY APPLICANT:

Product	Dimensions	Test Specifications	Product Description
Series 1300	Length: various Width: 20" Thickness 26 ga (0.020")	TAS 110 TAS 125	Stainless Steel (Follansbee TSC-II) preformed, standing seam. Coated, panels.
Series 1300 Clip	Length: 6 ¼" Width: 1" Height:.1-5/8" Thickness 24 ga (0.024")	TAS 125	Corrosion resistant, galvalume, preformed, coated, pre-finished, metal clips.
Trim Pieces	Length: varies Width: varies Thickness 0.04"	N/A	Corrosion resistant, galvalume, preformed, coated, pre-finished, trim pieces.

EVIDENCE SUBMITTED:

Test Agency	Test Identifier	Test Name/Report	Date
BASF		ASTM G 23 ASTM B 117	01/18/06
Architectural Testing Inc.	01-32797.01	TAS 100	11/01/98
Hurricane Test Laboratory, LLC.	0155-0404-04 0155-0102-05 0155-0815-05	TAS 125	02/13/06

APPROVED ASSEMBLIES:

SYSTEM A-1: Series 1300 TCS-II 20" Wide Panel

Deck Type: Wood, Non-insulated

Deck Description: $^{19}/_{32}$" or greater plywood or wood plank

Slope Range: 2":12" or greater

Maximum Uplift **See Table A Below**

Deck Attachment: In accordance with applicable building code, but in no case shall it be less than # 8d annular ring shank nails spaced 6" o.c. In reroofing, where the deck is less than $^{19}/_{32}$" thick (Minimum $^{15}/_{32}$") the above attachment method must be in addition to existing attachment.

Underlayment: Minimum underlayment shall be an ASTM D 226 Type II installed with a minimum 4" side-lap and 6" end-laps. Underlayment shall be fastened with corrosion resistant tin-caps and 12 gauge 1 ¼" annular ring-shank nails, spaced 6" o.c. at all laps and two staggered rows 12" o.c. in the field of the roll. Or, any approved underlayment having a current NOA.

Valleys: Valley construction shall be in compliance with Roofing Application Standard RAS 133 and with Englert's current published installation instructions.

Fire Barrier Board: Any approved fire barrier having a current NOA. Or for class A or B fire rating, install minimum ¼" thick Georgia Pacific "Dens Deck" (with current NOA) or minimum 4mm thick of Tritex, RockRoof (with current NOA) or $^{5}/_{8}$" water resistant type X gypsum sheathing with treated core and facer.

Metal Panels and Accessories: Install the "Series 1300 TCS-II Panel" and accessories in compliance with the current published installation instructions and details in Englert Metal Roofing Installation Manual. Flashings, penetrations, valley construction and other details shall be constructed in compliance with Roofing Application Standard RAS 133.

1. Panels shall be installed with approved Panel Clips located at each male panel rib side lap spaced at a maximum, listed in **Table A** below, parallel to roof slope, fastened with a minimum of four #10 self tapping pan head corrosion resistant screws of sufficient length to penetrate through the sheathing a minimum $^{3}/_{16}$ of an inch.
2. Standing seams shall be mechanically seamed to a full 180° degree seam, (double lock).

TABLE A
MAXIMUM DESIGN PRESSURES

Roof Areas	Field	Perimeter and Corner[1]
Maximum Design Pressures	**–73 psf**	**–123.5 psf**
Maximum Clip Spacing	**18" o.c.**	**8" o.c.**

1. Extrapolation shall not be allowed

SYSTEM LIMITATIONS

1. The maximum designed pressure listed herein shall be applicable to all roof pressure zones (i.e. field, perimeters, and corners). Neither rational analysis, nor extrapolation shall be permitted for enhanced fastening at enhanced pressure zones (i.e. perimeters, extended corners and corners).

2. Panels shall be roll formed in continuous lengths from eave to ridge. Maximum lengths shall be as described in Miami-Dade County Roofing Application Protocol RAS 133.

3. All panels shall be permanently labeled with the manufacturer's name and/or logo, and the following statement: "Miami-Dade County Product Control Approved. All clips shall be permanently labeled Englert, and/or logo, and/or model.

4. All products listed herein shall have a quality assurance audit in accordance with the Florida Building Code and Rule 9B-72 of the Florida Administrative Code.

5. Panels may be jobsite roll formed with machine model #_____from Englert Inc.

PROFILE DRAWINGS

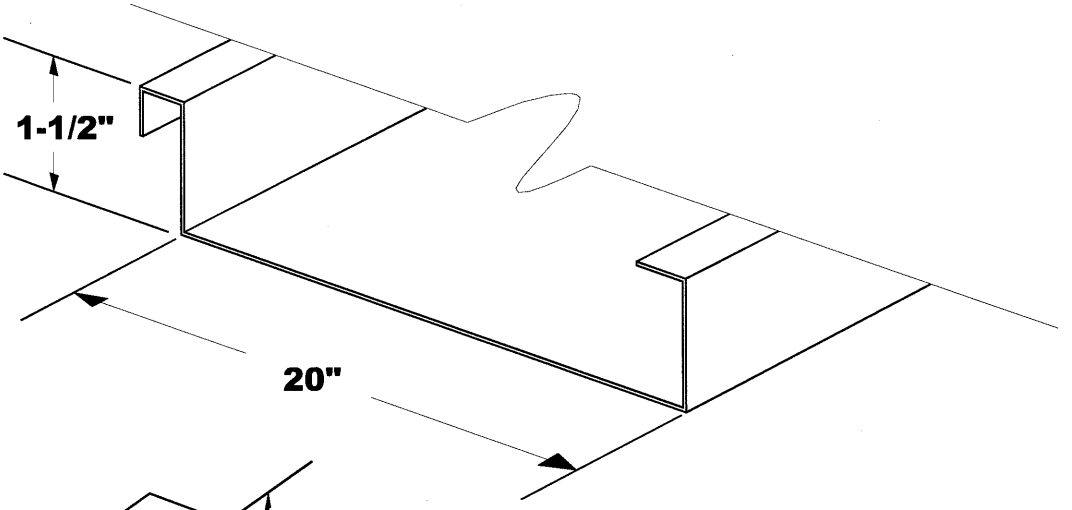

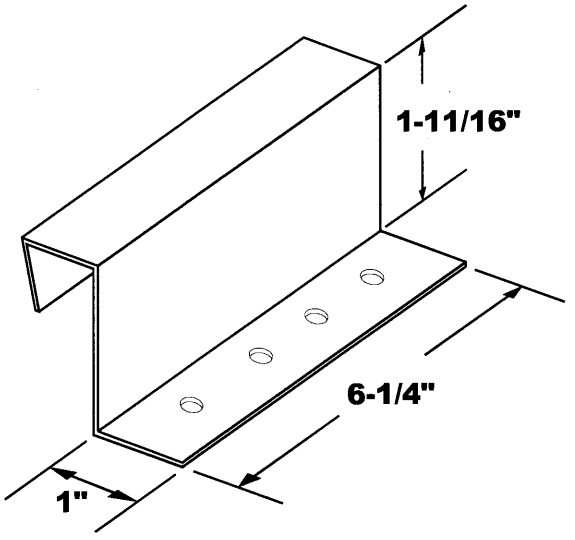

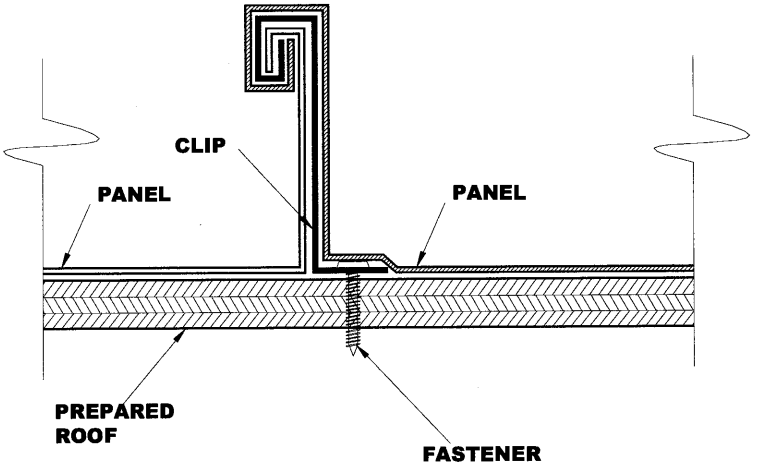

180 Degree Seam Detail

SERIES 1300 TCS-II PANEL SYSTEM

END OF THIS ACCEPTANCE