MIAMI-DADE COUNTY

BUILDING CODE COMPLIANCE OFFICE (BCCO)
PRODUCT CONTROL DIVISION

MIAMI-DADE COUNTY, FLORIDA
METRO-DADE FLAGLER BUILDING
140 WEST FLAGLER STREET, SUITE 1603
MIAMI, FLORIDA 33130-1563
(305) 375-2901 FAX (305) 375-2908
www.miamidade.gov/buildingcode

NOTICE OF ACCEPTANCE (NOA)

BASF Wall Systems, Inc.
3550 St. John's Bluff Road South
Jacksonville, FL 32224

SCOPE:
This NOA is being issued under the applicable rules and regulations governing the use of construction materials. The documentation submitted has been reviewed by Miami-Dade County Product Control Division and accepted by the Board of Rules and Appeals (BORA) to be used in Miami Dade County and other areas where allowed by the Authority Having Jurisdiction (AHJ).
This NOA shall not be valid after the expiration date stated below. The Miami-Dade County Product Control Division (In Miami Dade County) and/or the AHJ (in areas other than Miami Dade County) reserve the right to have this product or material tested for quality assurance purposes. If this product or material fails to perform in the accepted manner, the manufacturer will incur the expense of such testing and the AHJ may immediately revoke, modify, or suspend the use of such product or material within their jurisdiction. BORA reserves the right to revoke this acceptance, if it is determined by Miami-Dade County Product Control Division that this product or material fails to meet the requirements of the applicable building code.
This product is approved as described herein, and has been designed to comply with the Florida Building Code, including the High Velocity Hurricane Zone.

DESCRIPTION: Senerflex Wall System – L.M.I.

APPROVAL DOCUMENT: Drawing No. **no number**, Sheets 1 through 4 of 4, titled "Typical Details for Senerflex Wall System over Impact Resistant Substrates," prepared by manufacturer, dated 9/28/1998 and revised on 04/26/2007, signed and sealed by Walter Tillit, P.E., bearing the Miami-Dade County Product Control Revision stamp with the Notice of Acceptance number and expiration date by the Miami-Dade County Product Control Division.

MISSILE IMPACT RATING: Large and Small Missile Impact Resistant

LABELING: Each unit shall bear a permanent label with the manufacturer's name or logo, city, state and following statement: "Miami-Dade County Product Control Approved", unless otherwise noted herein.

LIMITATION: This system is not to be used on horizontal surfaces exposed to weather expect as a soffit, it is intended to be used on wall systems only.

RENEWAL of this NOA shall be considered after a renewal application has been filed and there has been no change in the applicable building code negatively affecting the performance of this product.

TERMINATION of this NOA will occur after the expiration date or if there has been a revision or change in the materials, use, and/or manufacture of the product or process. Misuse of this NOA as an endorsement of any product, for sales, advertising or any other purposes shall automatically terminate this NOA. Failure to comply with any section of this NOA shall be cause for termination and removal of NOA.

ADVERTISEMENT: The NOA number preceded by the words Miami-Dade County, Florida, and followed by the expiration date may be displayed in advertising literature. If any portion of the NOA is displayed, then it shall be done in its entirety.

INSPECTION: A copy of this entire NOA shall be provided to the user by the manufacturer or its distributors and shall be available for inspection at the job site at the request of the Building Official.
This NOA **revises and renews NOA # 01-1220.04** and consists of this page 1 and evidence page E-1, as well as approval document mentioned above.
The submitted documentation was reviewed by **Jaime D. Gascon, P.E.**

PRODUCT CONTROL ACCEPTED

J. Gascon
5/10/07

NOA No 06-1101.03
Expiration Date: November 05, 2008
Approval Date: May 31, 2007

BASF Wall Systems, Inc.

NOTICE OF ACCEPTANCE: EVIDENCE SUBMITTED

A. DRAWINGS

1. Manufacturer's die drawings and sections.
2. Drawing No **no number**, Sheets 1 through 4 of 4, titled "Typical Details for Senerflex Wall System over Impact Resistant Substrates," prepared by manufacturer, dated 9/28/1998 and revised on 04/26/2007, signed and sealed by Walter Tillit, P.E.,

B. TESTS

1. Test reports on: 1) Air Infiltration Test as per ASTM E 283,
   2) Uniform Static Air Pressure Test as per ASTM E 330,
   3) Water Resistance Test as per ASTM E 331,
   4) Cyclic Load Test as per PA 203, SFBC 2309, 2314 & 2315

   along with marked-up drawings and installation diagram prepared by Hurricane Testing Laboratory, Inc., Test Report No. **HTL-98017**, dated 02 /18/98, signed and sealed by Timothy S. Marshall, P.E.
   "Submitted under NOA# 01-1220.04"
2. Test reports on:
   1) Ignition Properties of Plastics Test as per ASTM D 1929,

   along with marked-up drawings and installation diagram prepared by Omega Point Laboratories, Report No. **8942-91671**, dated 05 /17/91, signed and sealed by William E. Fitch, P.E.
   "Submitted under NOA# 01-1220.04"

C. CALCULATIONS

1. None

D. QUALITY ASSURANCE

1. Miami Dade Building Code Compliance Office (BCCO).

E. MATERIAL CERTIFICATIONS

1. None

F. STATEMENTS

1. Statement from Senergy, LLC, dated 12/13/2001, that the product has not changed since it was originally approved.

G. OTHER

1. Contractual agreement for testing letter by Hurricane Testing Laboratory, Inc. dated March 23, 2007.
2. Test reports on: 1) Smoke Developed Test,
   2) Fame Spread Test,

   along with marked-up drawings and installation diagram prepared by UL/ Huntsman Chemical Corporation, Test Report No. **R7503**, dated 06 /18/98, signed by M. T. Cunningham.

Jaime D. Gascon, P.E.
Chief, Product Control Division
NOA No 06-1101.03
Expiration Date: November 05, 2008
Approval Date: May 31, 2007

APPLICATION NOTES

1)"ALLIED FOAM" OR "APACHE" EPS HAS A DENSITY OF 1 PCF AND IT SHALL BE APPLIED HORIZONTALLY IN A RUNNING BOND PATTERN STAGGERING VERTICAL JOINTS AND CORNERS.

2) SENERQUICK IS A WATER REDUCIBLE, NON CEMENTITIOUS, TRANSLUCENT WHITE ADHESIVE READY TO USE DIRECTLY FROM THE PAIL.

3) SENERFLEX BASE COAT IS MIXED AT TIME OF USE WITH PORTLAND CEMENT (1 TO 1 BY WEIGHT) AND WATER WITH PADDLE AND DRILL TO A HOMOGENEOUS CONSISTENCY.

4) FLEXGUARD 4 IS A GLASS FIBER, OPEN WEAVE REINFORCING FABRIC THAT WEIGHS 4.2 OZ/SQUARE YARD. EDGES SHALL BE LAPPED BY 2 1/2 INCHES.

5) SENERFLEX FINISH IS AN ACRYLIC BASED TEXTURE EXTERIOR COATING READY MIXED FROM THE FACTORY. IT IS APPLIED WITH A STAINLESS STEEL TROWEL AND FLOATED TO A DESIRED TEXTURE.

GENERAL NOTES

1) THIS SYSTEM HAS BEEN DESIGNED IN ACCORDANCE WITH THE FLORIDA BUILDING CODE 2004 EDITION AND ITS LATEST SUPPLEMENTS.

2) THIS SYSTEM HAS BEEN TESTED IN ACCORDANCE WITH MIAMI-DADE COUNTY PROTOCOL TAS-202 & TAS-203 FOR STRUCTURAL AND CYCLIC TESTING.

3) THIS SYSTEM SHALL BE APPLIED BY A LICENSED PLASTERING CONTRACTOR FOLLOWING THIS NOTICE OF ACCEPTANCE, THE RECOMMENDATIONS OF SENERGY INC. AND THE APPLICABLE SECTION OF THE SOUTH FLORIDA BUILDING CODE.

4) THE ENGINEER AND/OR ARCHITECT OF RECORD FOR EACH PROJECT USING THIS SYSTEM SHALL SIZE ALL STUD FRAMING TO ENSURE CONFORMANCE WITH STUD DEFLECTION AND STRESS LIMITATIONS AS REQUIRED BY GOVERNING CODE AND THIS DOCUMENT.

5) DETAILS ON SHEET 3 & 4 OF 4 ARE TYPICAL AND SHOW INTENT TO PREVENT WATER INFILTRATION INTO AND BEHIND THE SYSTEM. ALTERNATE DETAILS AND SPECIFIC CONDITIONS NOT COVERED BY THE TYPICAL DETAILS ARE THE RESPONSIBILITY OF THE LICENSED DESIGN PROFESSIONAL IN CONSULTATION WITH SENERGY, INC.

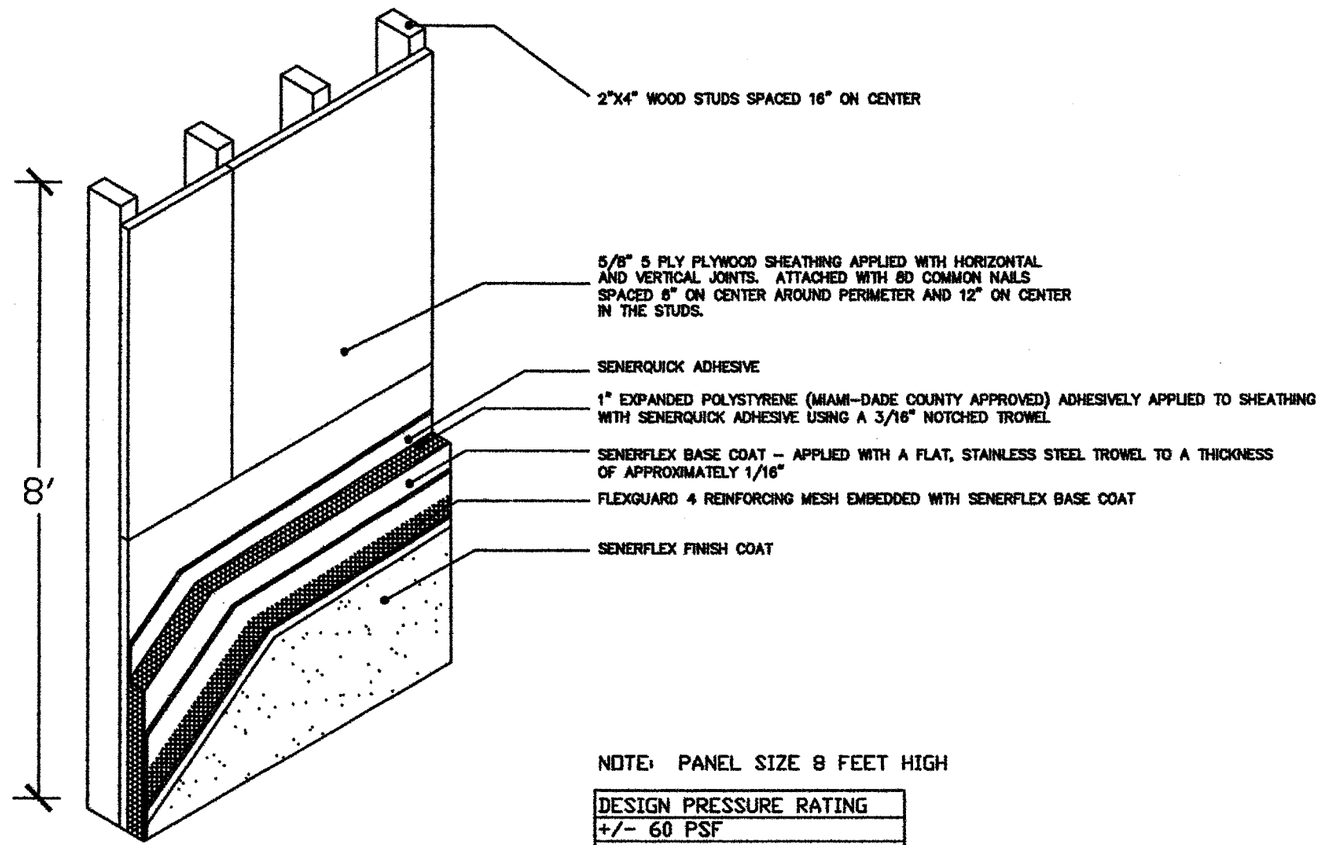

NOTE: PANEL SIZE 8 FEET HIGH

DESIGN PRESSURE RATING
+/- 60 PSF
INSTALLED OVER AN IMPACT RESISTANT SUBSTRATE

SENERGY

DATE: 9/28/98 | Page 1 of 4

Typical Details for Senerflex Wall System over Impact Resistant Substrates

REVISIONS	DATES
	1/10/00
	4/26/07

TILLECO INC.

TILLIT TESTING & ENGINEERING COMPANY
6355 NW 36th STREET, STE. 305
MIAMI, FLORIDA 33166
FL E.B. LICENSE No. 0006719

ENGINEER'S: NAME NUMBER & DISCIPLINE

WALTER A. TILLIT JR., P.E.
STRUCTURAL ENGINEER
FL. LIC.NO. 44167

MAY 01 2007

FOR OFFICE USE

PRODUCT REVISED
as complying with the Florida Building Code
Acceptance No. 06-1101.03
Expiration Date 11/05/2008
By
Miami-Dade Product Control Division

3550 St Johns Bluff Rd South
Jacksonville, FL 32224
800-221-9255
www.senergy.co

APPLICATION NOTES

1)"ALLIED FOAM" OR "APACHE" EPS HAS A DENSITY OF 1 PCF AND IT SHALL BE APPLIED HORIZONTALLY IN A RUNNING BOND PATTERN STAGGERING VERTICAL JOINTS AND CORNERS.

2) SENERFLEX BASE COAT IS MIXED AT TIME OF USE WITH PORTLAND CEMENT (1 TO 1 BY WEIGHT) AND WATER WITH PADDLE AND DRILL TO A HOMOGENEOUS CONSISTENCY.

3) FLEXGUARD 4 IS A GLASS FIBER, OPEN WEAVE REINFORCING FABRIC THAT WEIGHS 4.2 OZ/SQUARE YARD. EDGES SHALL BE LAPPED BY 2 1/2 INCHES.

4) SENERFLEX FINISH IS AN ACRYLIC BASED TEXTURE EXTERIOR COATING READY MIXED FROM THE FACTORY. IT IS APPLIED WITH A STAINLESS STEEL TROWEL AND FLOATED TO A DESIRED TEXTURE.

GENERAL NOTES

1) THIS SYSTEM HAS BEEN DESIGNED IN ACCORDANCE WITH THE FLORIDA BUILDING CODE 2004 EDITION AND ITS LATEST SUPPLEMENTS.

2) THIS SYSTEM HAS BEEN TESTED IN ACCORDANCE WITH MIAMI-DADE COUNTY PROTOCOL TAS-202 & TAS-203 FOR STRUCTURAL AND CYCLIC TESTING.

3) THIS SYSTEM SHALL BE APPLIED BY A LICENSED PLASTERING CONTRACTOR FOLLOWING THIS NOTICE OF ACCEPTANCE, THE RECOMMENDATIONS OF SENERGY INC. AND THE APPLICABLE SECTION OF THE SOUTH FLORIDA BUILDING CODE.

4) THE ENGINEER AND/OR ARCHITECT OF RECORD FOR EACH PROJECT USING THIS SYSTEM SHALL DESIGN THE MASONRY WALL AS REQUIRED BY GOVERNING CODE AND THIS DOCUMENT.

5) DETAILS ON SHEET 3 & 4 OF 4 ARE TYPICAL AND SHOW INTENT TO PREVENT WATER INFILTRATION INTO AND BEHIND THE SYSTEM. ALTERNATE DETAILS AND SPECIFIC CONDITIONS NOT COVERED BY THE TYPICAL DETAILS ARE THE RESPONSIBILITY OF THE LICENSED DESIGN PROFESSIONAL IN CONSULTATION WITH SENERGY, INC.

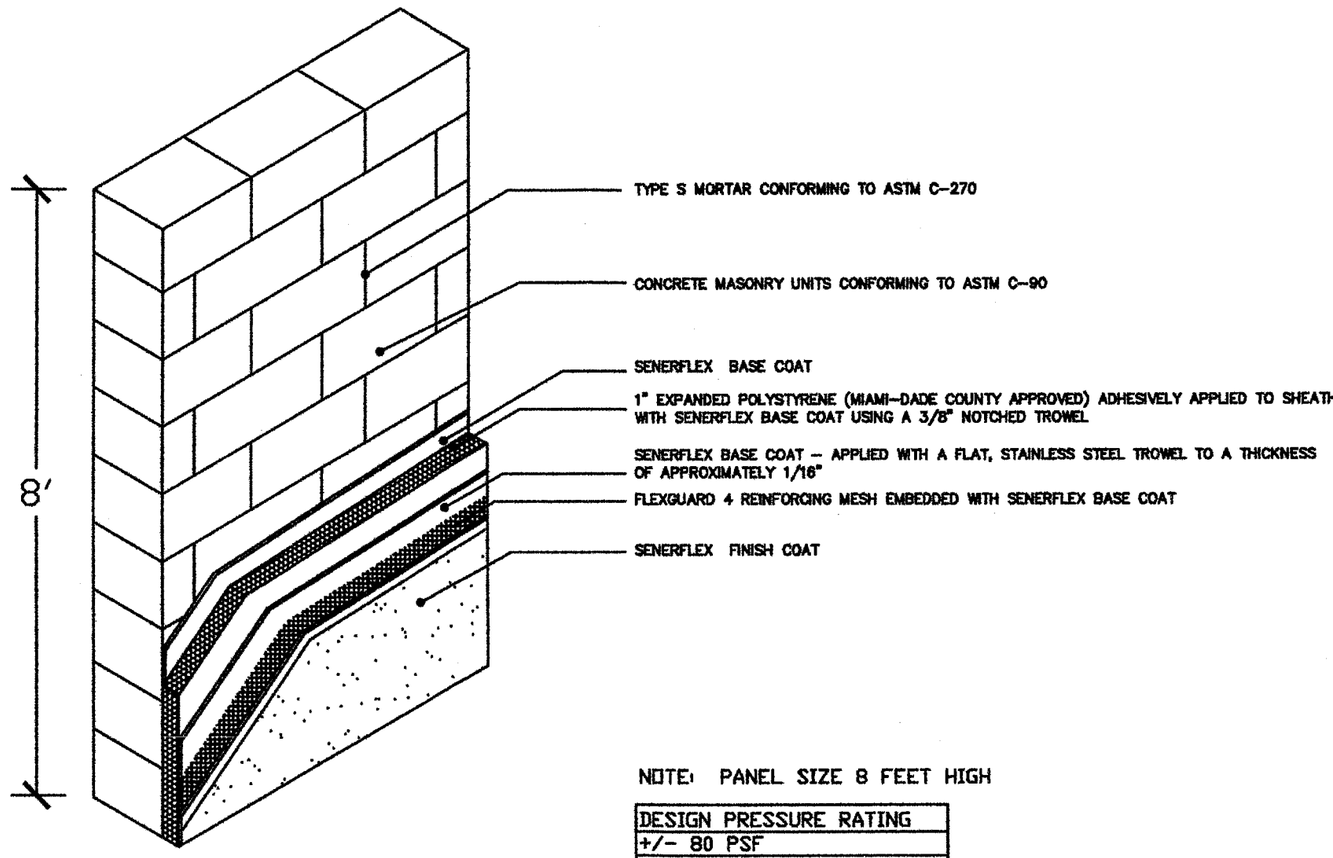

NOTE: PANEL SIZE 8 FEET HIGH

DESIGN PRESSURE RATING
+/- 80 PSF
INSTALLED OVER AN IMPACT
RESISTANT SUBSTRATE

SENERGY

DATE: 9/28/98 | Page 2 of 4

Typical Details for Senerflex Wall System over Impact Resistant Substrates

REVISIONS	DATES
	1/10/00
	4/26/07

TILTECO INC.

TILLIT TESTING & ENGINEERING COMPANY
6355 NW 36th STREET, STE. 305
MIAMI, FLORIDA 33166
FL E.B. LICENSE No. 0006719

ENGINEER'S: NAME NUMBER & DISCIPLINE

WALTER A. TILLIT JR., P.E.
STRUCTURAL ENGINEER
FL. LIC.NO. 44167

MAY 01 2007

FOR OFFICE USE

PRODUCT REVISED
as complying with the Florida Building Code
Acceptance No 06-1101.03
Expiration Date 11/05/2008
By
Miami Dade Product Control Division

3550 St Johns Bluff Rd South
Jacksonville, FL 32224
800-221-9255
www.senergy.co

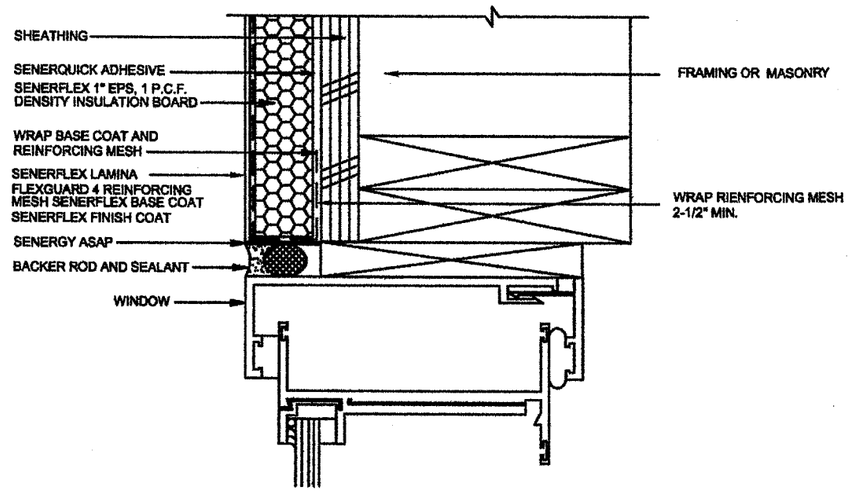

WINDOW JAMB DETAIL (FLUSH)

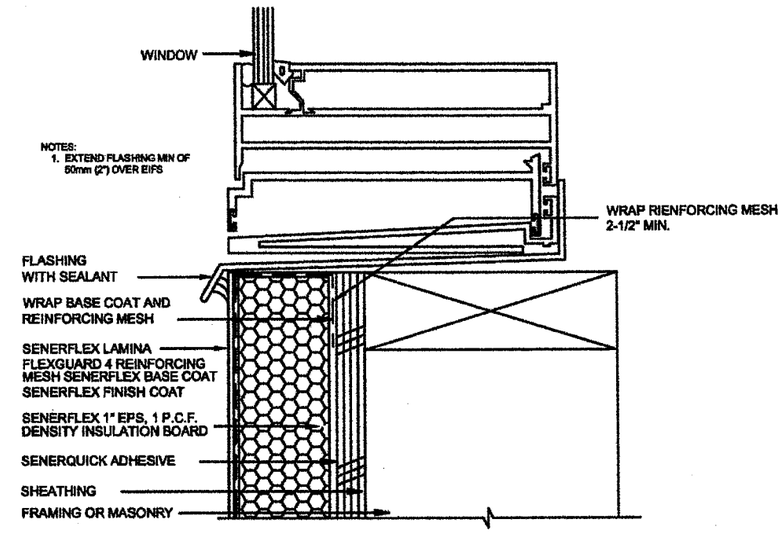

WINDOW SILL DETAIL (FLUSH)

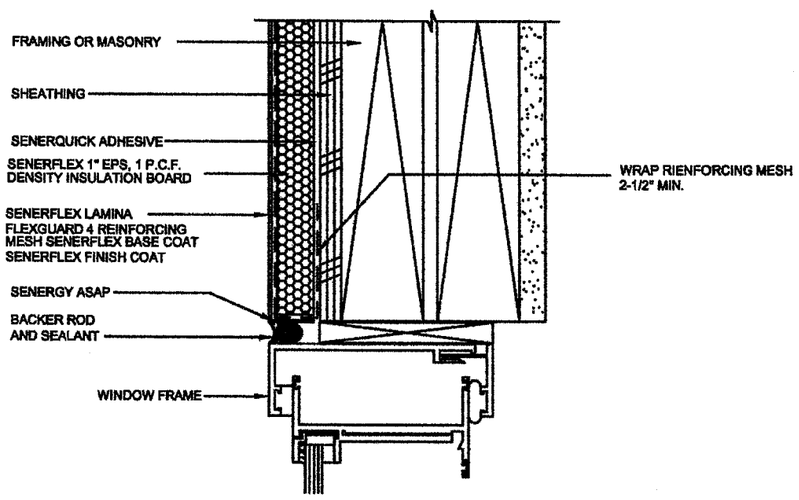

TYPICAL WINDOW HEAD (FLUSH)

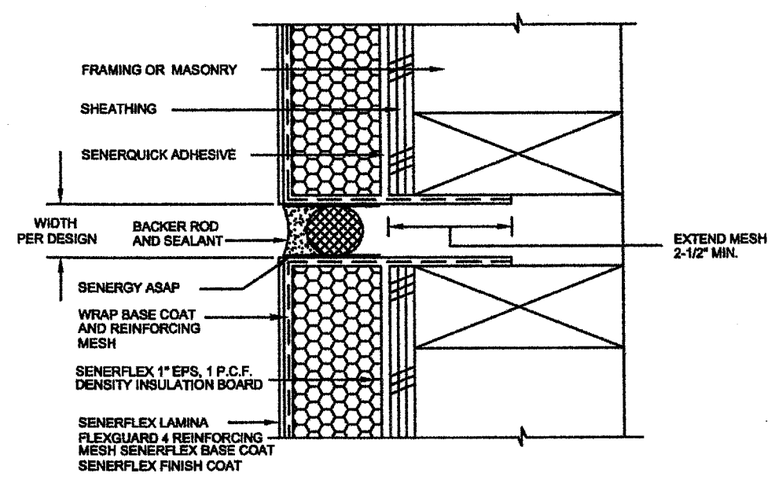

EXPANSION JOINT DETAIL

NOTE: SENERGY ASAP IS APPLIED TO SENERFLEX BASE COAT IN SEALANT JOINTS PRIOR TO APPLICATION OF SEALANT SYSTEM

SENERGY

DATE: 1/10/00 | Page 3 of 4

Typical Details for Senerflex Wall System over Impact Resistant Substrates

REVISIONS	DATES
	4-26-07

TILTECO INC.

TILLIT TESTING & ENGINEERING COMPANY
6355 NW 36th STREET, STE. 305
MIAMI, FLORIDA 33166
FL E.B. LICENSE No. 0006719

ENGINEER'S: NAME NUMBER & DISCIPLINE

WALTER A. TILLIT JR., P.E.
STRUCTURAL ENGINEER
FL. LIC.NO. 44167

MAY 01 2007

FOR OFFICE USE

PRODUCT REVISED
as complying with the Florida
Building Code
Acceptance No. 06-1101.03
Expiration Date 11/05/2008
By
Miami Dade Product Control
Division

3550 St Johns Bluff Rd South
Jacksonville, FL 32224
800-221-9255
www.senergy.cc

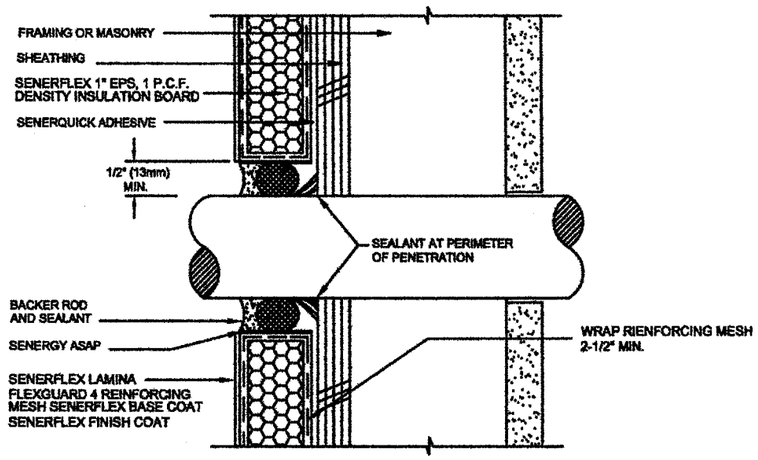

TYPICAL PIPE PENETRATION

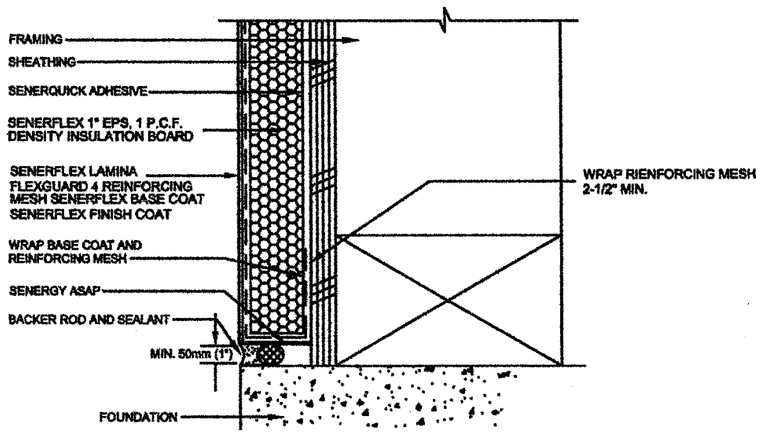

TERMINATION AT FOUNDATION (FLUSH)

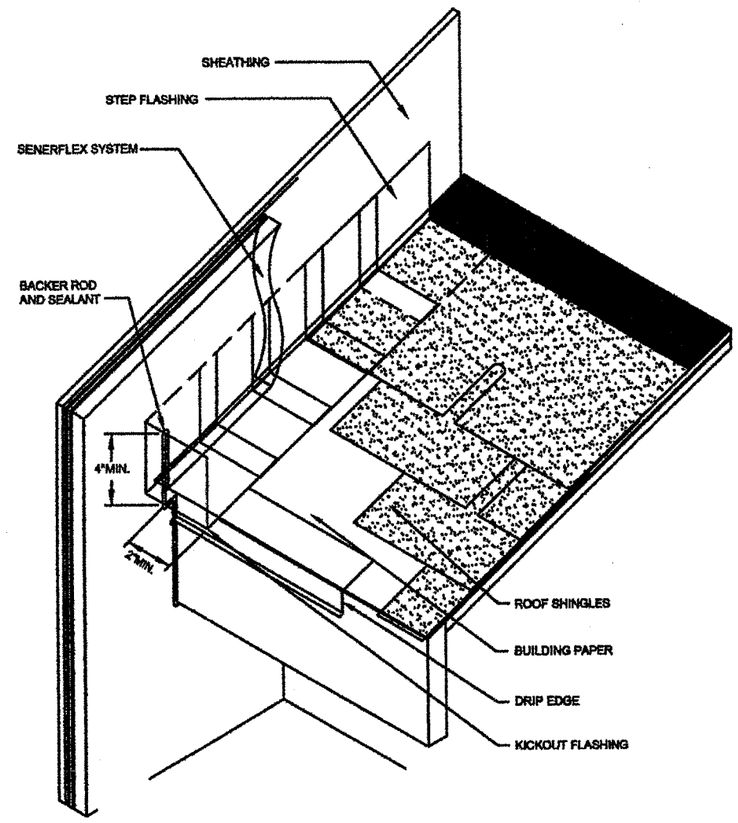

NOTE:
1. KICKOUT FLASHING MUST BE ANGLED 100° MIN. TO ALLOW FOR PROPER DRAINAGE.
2. KICKOUT FLASHING SEAMS MUST BE SOLDERED OR SEALED WITH APPROPRIATE SEALANT.
3. TERMINATE SENERFLEX SYSTEM 1" (25mm) MIN. ABOVE ROOF
4. ROOFING DETAIL SHALL COMPLY WITH CHAPTER 15 OF THE F.B.C.

KICKOUT FLASHING DETAIL

NOTE: SENERGY ASAP IS APPLIED TO SENERFLEX BASE COAT IN SEALANT JOINTS PRIOR TO APPLICATION OF SEALANT SYSTEM

SENERGY

DATE: 1/10/00 | Page 4 of 4

Typical Details for Senerflex Wall System over Impact Resistant Substrates

REVISIONS	DATES
	4-26-07

TILLECO INC.

TILLIT TESTING & ENGINEERING COMPANY
6355 NW 36th STREET, STE. 305
MIAMI, FLORIDA 33166
FL E.B. LICENSE No. 0006719

ENGINEER'S: NAME NUMBER & DISCIPLINE

WALTER A. TILLIT JR., P.E.
STRUCTURAL ENGINEER
FL. LIC.NO. 44167

MAY 01 2007

FOR OFFICE USE

PRODUCT REVISED
as complying with the Florida Building Code
Acceptance No. 06-1101.03
Expiration Date 11/05/2008
By
Miami/Dade Product Control Division

3550 St Johns Bluff Rd South
Jacksonville, FL 32224
800-221-9255
www.senergy.cc