MIAMI-DADE

BUILDING CODE COMPLIANCE OFFICE (BCCO)
PRODUCT CONTROL DIVISION

MIAMI-DADE COUNTY, FLORIDA
METRO-DADE FLAGLER BUILDING
140 WEST FLAGLER STREET, SUITE 1603
MIAMI, FLORIDA 33130-1563
(305) 375-2901 FAX (305) 375-2908

NOTICE OF ACCEPTANCE (NOA)

Hurst Awning Co, Inc.
6865 NW 36th Ave.
Miami, FL 33147

SCOPE:
This NOA is being issued under the applicable rules and regulations governing the use of construction materials. The documentation submitted has been reviewed by Miami-Dade County Product Control Division and accepted by the Board of Rules and Appeals (BORA) to be used in Miami Dade County and other areas where allowed by the Authority Having Jurisdiction (AHJ).

This NOA shall not be valid after the expiration date stated below. The Miami-Dade County Product Control Division (In Miami Dade County) and/or the AHJ (in areas other than Miami Dade County) reserve the right to have this product or material tested for quality assurance purposes. If this product or material fails to perform in the accepted manner, the manufacturer will incur the expense of such testing and the AHJ may immediately revoke, modify, or suspend the use of such product or material within their jurisdiction. BORA reserves the right to revoke this acceptance, if it is determined by Miami-Dade County Product Control Division that this product or material fails to meet the requirements of the applicable building code.
This product is approved as described herein, and has been designed to comply with the Florida Building Code including the High Velocity Hurricane Zone.

DESCRIPTION: Extruded Aluminum Roll-Up Shutter

APPROVAL DOCUMENT: Drawing No. 06-344, titled "Hi-Roller 50 Roll-Up Shutters", prepared by Knezevich & Associates, Inc. dated 04/10/06, with last revision on 04/10/06, sheets 1 through 13 of 13, bearing the Miami-Dade County Product Control Approval stamp with the Notice of Acceptance number and approval date by the Miami-Dade County Product Control Division.

MISSILE IMPACT RATING: Large and Small Missile Impact

LABELING: Each unit shall bear a permanent label with the manufacturer's name or logo, city, state and the following statement: "Miami-Dade County Product Control Approved", unless otherwise noted herein.

RENEWAL of this NOA shall be considered after a renewal application has been filed and there has been no change in the applicable building code negatively affecting the performance of this product.

TERMINATION of this NOA will occur after the expiration date or if there has been a revision or change in the materials, use, and/or manufacture of the product or process. Misuse of this NOA as an endorsement of any product, for sales, advertising or any other purposes shall automatically terminate this NOA. Failure to comply with any section of this NOA shall be cause for termination and removal of NOA.

ADVERTISEMENT: The NOA number preceded by the words Miami-Dade County, Florida, and followed by the expiration date may be displayed in advertising literature. If any portion of the NOA is displayed, then it shall be done in its entirety.

INSPECTION: A copy of this entire NOA shall be provided to the user by the manufacturer or its distributors and shall be available for inspection at the job site at the request of the Building Official.
This NOA **renews NOA 03-0929. 06** and consists of this page, evidence page E1 and approval document mentioned above.
The submitted documentation was reviewed by **Mohammed Iqbal Shaikh, P.E.**

PRODUCT CONTROL ACCEPTED
02/16/07

Hurst Awning Co, Inc.

NOTICE OF ACCEPTANCE: EVIDENCE PAGE

A. DRAWINGS

1. Drawing No. **06-344**, Sheets 1 through 13 of 13, titled "HI-ROLLER 50 Roll-Up Shutter" dated 04/10/06, and last time revised on 04/10/06, prepared by Thornton Tomasetti Inc. signed and sealed by V. J. Knezevich, P.E.

B. TESTS

1. Test report on Uniform Static Air Pressure Test per PA 202, Large Missile Impact Test per PA 201 & Cyclic Wind Pressure Test per PA 203 of 2" Blade Aluminum Roll-Up Shutter, prepared by Construction Testing Corporation, Report No. 01011, dated 07/05/01, signed and sealed by Y. G. Kuri, PE.

C. CALCULATION

1. Comparative analysis for slats, storm bars, headers, track, mullions and anchors using rational analysis dated 06/20/01, pages 1 through 89 of 89, prepared by Knezevich and Associates, Inc., signed and sealed by V. J. Knezevich, PE.
2. Revision to comparative analysis for slats, storm bars, headers, track, mullion and anchors using rational analysis dated 10/21/02, pages 1 through 59, prepared by Knezevich and Associates, Inc., signed and sealed by V.J. Knezevich.

D. QUALITY ASSURANCE

1. Product Control Division.

E. MATERIAL CERTIFICATIONS

1. Test report of Tensile test per ASTM A8/A370 of 0.055" Aluminum Extrusion, prepared by Certified Testing Laboratories, on 06/12/01, signed and sealed by R. Patel, PE.

F. STATEMENTS

1. Code compliance letter issued by Knezevich & Associates, Inc. on 06/21/01, signed and sealed by V. J. Knezevich, PE.
2. No-financial interest letter issued by Knezevich & Associates, Inc. on 02/13/01, signed and sealed by V. J. Knezevich, PE
3. Manufacturer's Acknowledgment Letter issued by Hurst Awning Company Inc on 12/08/03 and signed by F. Cornelius.
4. Release Letters issued by Hi-Tech Shutter Group Inc on 09/22/03 and 10/18/06 Signed by Frank Cornelius.

Mohammed Iqbal Shaikh, P. E.
Sr. Building Code Compliance Specialist
NOA No 06-1108.01
Expiration Date: January 1, 2009
Approval Date: March 1, 2007

Print Information: P:\FL1\KA\CADD\Associations\Hi-Tech\HURST\06-344\RO-sub\06-344-01.dwg MCantu 10/04/2006 12:20:08pm 09/30/06 11:28

GENERAL NOTES:

1. THESE APPROVAL DOCUMENTS REPRESENT A SHUTTER SYSTEM ANALYZED WITH THE PROVISION SET FOR THE ISSUANCE OF A NOTICE OF ACCEPTANCE (NOA) BY MIAMI-DADE COUNTY PRODUCT CONTROL DIVISION FOR THE HIGH VELOCITY HURRICANE ZONE (HVHZ) OF THE FLORIDA BUILDING CODE, 2004 WITH 2005 SUPPLEMENTS.
2. AN ALLOWABLE STRESS INCREASE HAS NOT BEEN USED IN THE DESIGN OF THIS PRODUCT.
3. DETERMINE THE POSITIVE AND NEGATIVE DESIGN LOADS TO USE WHEN REFERENCING THESE DOCUMENTS IN ACCORDANCE WITH THE GOVERNING CODE AND GOVERNING WIND VELOCITY. FOR WIND LOAD CALCULATIONS IN ACCORDANCE WITH ASCE 7-02, A DIRECTIONALITY FACTOR OF Kd =.85 MAY BE USED.
4. THESE APPROVAL DOCUMENTS ARE GENERIC AND DO NOT INCLUDE INFORMATION FOR SITE-SPECIFIC APPLICATION OF THIS SHUTTER SYSTEM.
5. USE OF THESE APPROVAL DOCUMENTS SHALL COMPLY WITH CHAPTER 61G15-23 OF THE FLORIDA ADMINISTRATIVE CODE.
6. THESE APPROVAL DOCUMENTS, ARE SUITABLE TO BE APPLIED BY THE CONTRACTOR PROVIDED THE CONTRACTOR DOES NOT DEVIATE FROM THE CONDITIONS DETAILED HEREIN AND THE CONTRACTOR VERIFIES THAT THE EXISTING STRUCTURE DOES NOT DEVIATE IN EITHER FORM OR MATERIAL FROM THE STRUCTURAL SUBSTRATES DETAILED HEREIN.
7. ANY MODIFICATIONS OR ADDITIONS TO THESE APPROVAL DOCUMENTS WILL VOID THE APPROVAL DOCUMENTS.
8. WHEN THE SITE CONDITIONS DEVIATE FROM THESE APPROVAL DOCUMENTS, THE BUILDING OFFICIAL MAY ELECT ONE OF THE FOLLOWING OPTIONS:
   A. REQUIRE THAT SITE SPECIFIC DOCUMENTS BE PREPARED, SIGNED, DATED AND SEALED BY A LICENSED ENGINEER OR REGISTERED ARCHITECT, WHICH DETAIL AND JUSTIFY THE DEVIATION AS A CONDITION TO THE BUILDING OFFICIAL GRANTING HIS/HER APPROVAL.
   B. REQUIRE THAT A ONE-TIME SITE SPECIFIC APPROVAL BE APPLIED FOR AND SECURED FROM THE MIAMI-DADE COUNTY PRODUCT CONTROL DIVISION

   WHEN THE SITE CONDITION DEVIATIONS OCCUR WITHIN THE HIGH VELOCITY HURRICANE ZONE AREAS ONLY OPTION "B" SHALL BE ACCEPTED BY THE BUILDING OFFICIAL.
9. EACH SHUTTER ASSEMBLY SHALL BE PERMANENTLY LABELED ON THE HOOD OR GUIDE RAIL AS FOLLOWS:

   HURST AWNING COMPANY, INC.
   MIAMI, FLORIDA
   MIAMI-DADE COUNTY PRODUCT APPROVED
10. DESIGN BASED ON CONSTRUCTION TESTING CORPORATION (C.T.C.), MIAMI, FLORIDA TEST REPORT NO. 01-011.
11. ALL EXTRUSIONS SHALL BE 6063-T6 ALUMINUM ALLOY, U.O.N.
12. ALL BOLTS AND WASHERS SHALL BE GALVANIZED OR STAINLESS STEEL WITH A MINIMUM TENSILE STRENGTH OF 33 K.S.I., U.O.N. POP RIVETS SHALL BE 3/16" DIA. 5052 ALUMINUM ALLOY.
13. DESIGN CRITERIA FOR MULTIPLE SPANS:
    A. MAXIMUM DEFLECTION OF OUTSIDE HEADERS = L/30
    B. MAXIMUM DEFLECTION OF POSITIVE (INSIDE) STORM BARS = L/30 OR 2 INCHES
    C. MAXIMUM DEFECTION OF NEGATIVE (OUTSIDE) STORMS BARS = L/30
    D. MAXIMUM POSITIVE DEFLECTION OF SLATS = L/30 OR 2 INCHES; NEGATIVE DEFLECTION OF SLATS = L/30
    E. MAXIMUM DEFLECTION OF MULLIONS = L/30
14. MINIMUM SLAT ENGAGEMENT IS 1-1/4"
15. ONCE ALL SHUTTER SYSTEM COMPONENTS HAVE BEEN CHOSEN, CHECK FOR COMPLIANCE WITH THE PROVISION OF HIGH VELOCITY HURRICANE ZONES (HVHZ), SECTION 1613.1(9), OF THE FLORIDA BUILDING CODE 2004.

INSTRUCTIONS:

1. DETERMINE DESIGN LOAD ON OPENING TO BE COVERED WITH A ROLL UP SHUTTER IN ACCORDANCE WITH FLORIDA BUILDING CODE 2004.
2. DETERMINE THE SLAT SPAN THAT YOU WILL NEED TO COVER THE OPENING.
3. DETERMINE IF YOU WILL NEED A SINGLE SPAN, DOUBLE SPAN OR THREE OR MORE SPANS TO COVER THE OPENING.

SLAT SPANS

1. FOR A SINGLE, DOUBLE & MORE THAN 2 SLAT SPAN SCHEDULES, SEE SCHEDULES "B-1", "B-2" & "B-3" ON PAGE 5. LOCATE THE DESIGN WIND LOAD, AND THEN READ THE ALLOWABLE SLAT SPAN.

STORM BARS

1. FOR MULTIPLE SPANS SEE SCHEDULES F & G ON PAGES 8 & 9 FOR EXTERIOR & INTERIOR STORM BARS. THE LAST ROW OF EACH DESIGN WIND LOAD INDICATES THE MAXIMUM ALLOWABLE SLAT SPAN UTILIZING THAT OR A LESSER SLAT SPAN, READ SCHEDULE HORIZONTALLY FROM LEFT TO RIGHT, UNTIL YOU FIND A STORM BAR SIZE AND HEIGHT THAT FITS THE OPENING.

MULLIONS

1. FOR ALLOWABLE SLAT SPANS, UTILIZING A PERMANENT MULLION, SEE SCHEDULE "H" ON PAGE 10. SELECT YOUR DESIGN WIND LOAD. THE LAST ROW OF EACH DESIGN LOAD INDICATES THE MAXIMUM ALLOWABLE SLAT SPAN UTILIZING THAT OR A LESSER SPAN, READ FROM LEFT TO RIGHT AND SELECT THE PERMANENT MULLION THAT HAS SUFFICIENT HEIGHT FOR YOUR OPENING.

STORM BAR & MULLION CONNECTIONS

1. FOR PROPER CONNECTIONS AT THE TOP AND BOTTOM OF STORM BARS AND MULLIONS, SEE SCHEDULE "C" OR "D", PAGE 7. EACH STORM BAR AND MULLION SCHEDULE HAS REACTION LOADS INDICATED ON THE SCHEDULE TO THE RIGHT OF THE ALLOWABLE SPAN. TAKE THAT NUMBER AND ENTER SCHEDULE "C" FOR A TENSION CONNECTION OR SCHEDULE "D" FOR A SHEAR CONNECTION TO DETERMINE THE TYPE AND SIZE OF ANCHOR AS WELL AS THE EMBEDMENT INTO CONCRETE, CONCRETE BLOCK OR WOOD. THIS SCHEDULE WILL ALSO GIVE YOU THE SIZE AND THICKNESS OF THE ALUMINUM ANGLES TO BE USED AS WELL AS THE TEK SCREW ATTACHMENT OF THE ANGLE TO THE STORM BAR.

HEADERS

1. HEADERS FOR STORM BARS CAN BE FOUND IN SCHEDULE "J" ON PAGES 11 & 12. SELECT THE DESIGN WIND LOAD AND ENTER SCHEDULE "J". NOTE THAT THE MAXIMUM ALLOWABLE OPENING HEIGHT IS SHOWN AT THE TOP OF THE SCHEDULE. READ ACROSS FROM LEFT TO RIGHT FROM YOUR DESIGN WIND LOAD UNTIL YOU INTERSECT THE COLUMN THAT SHOWS A HEIGHT EQUAL TO OR GREATER THAN YOUR SELECTED OPENING HEIGHT. SEVERAL STORM BAR SIZES ARE IN THE SCHEDULE. YOU MAY CHOOSE FROM THE COLUMN THAT BEST MEETS YOUR REQUIREMENTS.

HEADER CONNECTIONS

1. CONNECTIONS FOR HEADERS MAY ALSO BE FOUND IN SCHEDULES "C" AND "D" (DETERMINE REACTIONS FOR HEADERS IN HEADER REACTION SCHEDULE E, PAGE 7.

INDEX

SHEET No.	DESCRIPTION
1	GENERAL NOTES - INSTRUCTIONS NOTES
2	COMPONENTS
3	SIDE RAIL CONNECTIONS, SECTIONS & HEADER ASSEMBLY
4	TYPICAL ELEVATIONS & SECTIONS
5	SLAT SPAN SCHED. B-1, B-2, B-3 & SEP. FROM GLASS SCHED. B-4
6	HEADER - DRUM SUPPORT DETAILS
7	ANCHOR AND FASTENER SCHEDULES C, D & E FOR STORM BAR, HEADER & MULLION.
8	NEGATIVE (EXTERIOR) STORM BAR SCHEDULE F (30 P.S.F. -220 P.S.F.)
9	POSITIVE (INTERIOR) STORM BAR SCHEDULE G (30 P.S.F. -220 P.S.F.)
10	PERMANENT MULLION SCHEDULE H (30 P.S.F. -220 P.S.F.)
11	HEADER SCHEDULE J (30 P.S.F. TO 110 P.S.F. DESIGN LOADS)
12	HEADER SCHEDULE J (120 P.S.F. TO 220 P.S.F. DESIGN LOADS)
13	GUIDE ANCHOR SCHEDULE

PRODUCT REVIEWED
as complying with the Florida
Building Code
Accepted 06-1108.01
Expires 01/01/2009
By
Miami Dade Product Control
Division

Thornton Tomasetti
330 N. Andrews Ave., Suite 480 • Ft. Lauderdale, FL 33301
T 954.522.3690 • F 954.522.3691 • COA # 7519
Website: www.ThorntonTomasetti.com

Copyright © 2006 Thornton-Tomasetti, Inc.

HI-ROLLER 50 LICENSED BY HI-TECH SHUTTER GROUP, INC.

HI-ROLLER 50 ROLL-UP SHUTTER

Manufacturers of Hurricane & Security Protection Products
6865 N.W. 36th Avenue
Miami, Florida 33147
Phone: (305) 635-0900
Toll Free: (800) 327-0905
Fax: (305) 634-9078
HURST AWNING COMPANY, INC. QUALITY SERVICE SINCE 1957

V.J. Knezevich
Professional Engineer
FL License No.: PE 0010953

SEP 30 2006

revisions

no	date	by	description
0	04/10/2006	VJK	PREVIOUSLY DRAWING NO. 01-707

HTSG I.D. # 06093006360D

date 04/10/2006
scale AS NOTED
drawn by MCR
design by VJK
checked by VJK
drawing no. 06-344
sheet 1 of 13

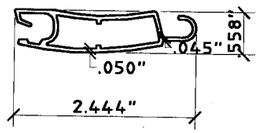

1 **ROLL-UP SLAT**
SCALE: HALF SIZE

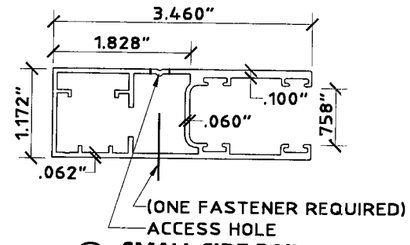

2 **SMALL SIDE RAIL**
SCALE: HALF SIZE

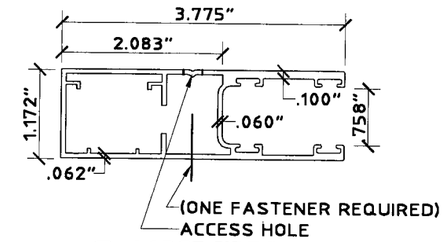

3 **LARGE SIDE RAIL**
SCALE: HALF SIZE

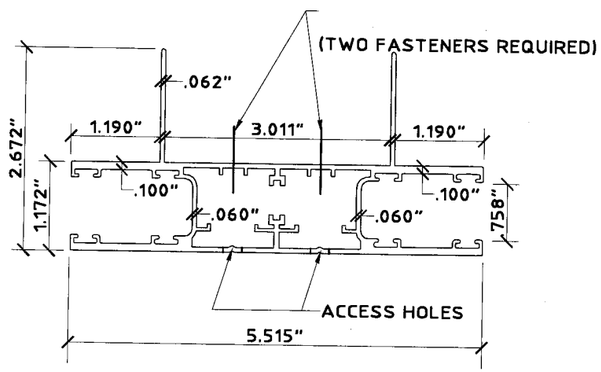

4 **CENTER / MULLION GUIDE RAIL**
SCALE: HALF SIZE

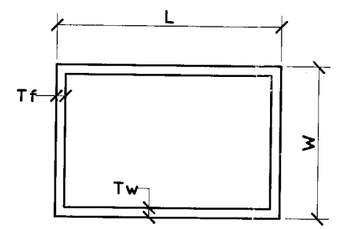

5 7 9 10 12 **BOX BEAM (TYPE A)**
SCALE: 3" = 1' - 0"

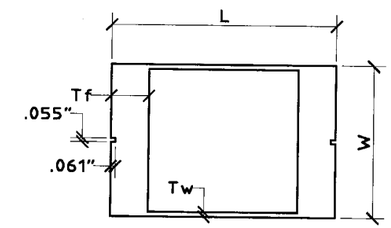

8 11 **BOX BEAM (TYPE B)**
SCALE: 3" = 1' - 0"

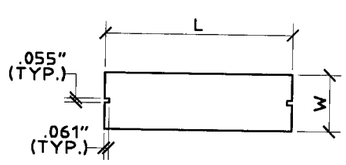

6 **BEAM (TYPE C)**
SCALE: 3" = 1' - 0"

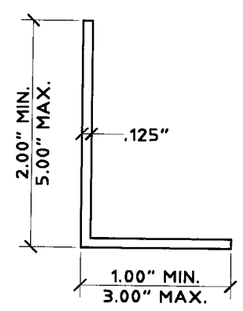

13 **ANGLE**
SCALE: HALF SIZE

STORM BAR, HEADER, MULLION MEMBERS - SCHEDULE A

MEMBER MARK	MEMBER TYPE	W (INCHES)	L (INCHES)	Tf (INCHES)	Tw (INCHES)
5	A	2	3	0.125	0.125
6	C	3/4	2-1/2	SOLID	SOLID
7	A	2	5	0.125	0.125
8	B	1	3	0.500	0.093
9	A	2	6	0.125	0.125
10	A	2	8	0.125	0.125
11	B	2	3	0.500	0.093
12	A	4	6	0.125	0.125

Florida
06-1108.01
01/01/2009
By
Miami Dade Product Control Division

Thornton Tomasetti
330 N. Andrews Ave., Suite 450 • Ft. Lauderdale, FL 33301
T 954.522.3690 • F 954.522.3691 • COA # 7519
Website: www.ThorntonTomasetti.com

Copyright © 2006 Thornton-Tomasetti, Inc.
HI-ROLLER 50 LICENSED BY HI-TECH SHUTTER GROUP, INC.

HI-ROLLER 50 ROLL-UP SHUTTER

Manufacturers of Hurricane & Security Protection Products
HURST AWNING COMPANY, INC.
"QUALITY SERVICE SINCE 1957"
6865 N.W. 36th Avenue
Miami, Florida 33147
Phone: (305) 635-0900
Toll Free: (800) 327-0905
Fax: (305) 634-9078

V.J. Knezevich
Professional Engineer
FL License No. PE 0010983

SEP 30 2006

revisions

no	date	by	description
0	04/10/2006	VJK	PREVIOUSLY DRAWING NO. 01-207

HTSG I.D. # 060930006360D

date 04/10/2006
scale AS NOTED
drawn by MCR
design by VJK
checked by VJK
drawing no. 06-344
sheet 2 of 13

Print Information: P:\FL1\KA\CADD\Associations\Hi-Tech\HURST\06-344\RO-sub\06-344-02.dwg MCantu 10/04/2006 12:20:14pm 09/30/06 11:28

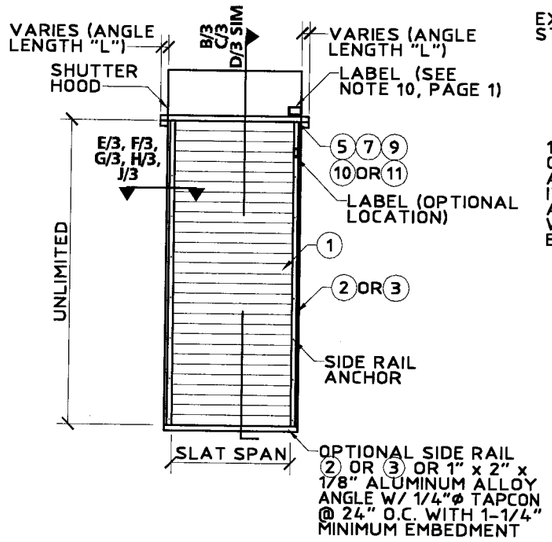

A ELEVATION OF SINGLE SPAN CONDITION
N.T.S.

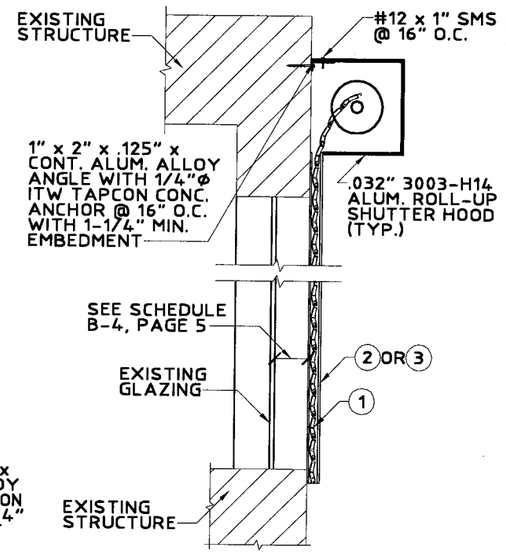

B WALL MOUNT SECTION
SCALE: 3/4" = 1' - 0"

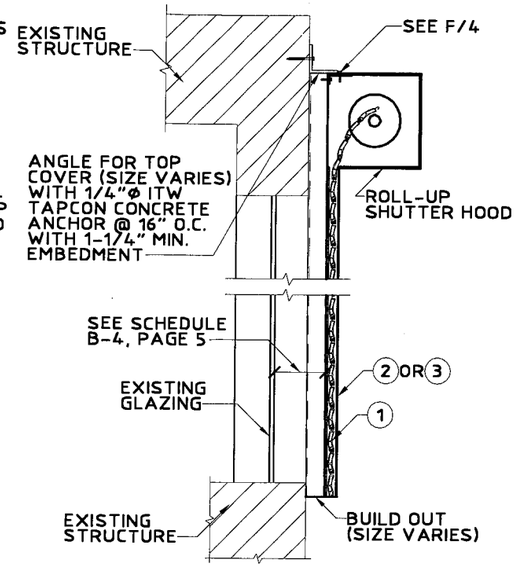

C BUILD OUT SECTION
SCALE: 3/4" = 1' - 0"

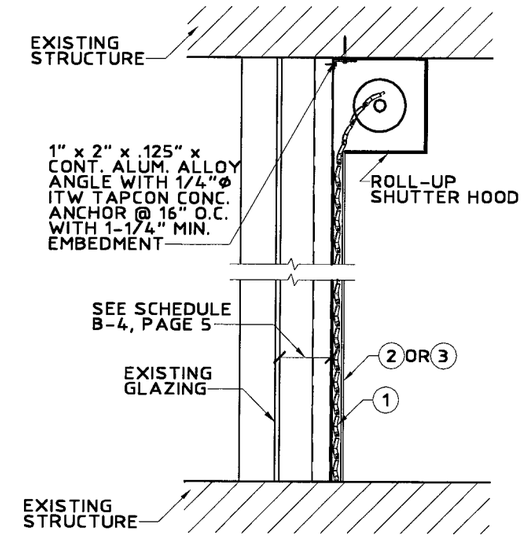

D INSIDE MOUNT SECTION
SCALE: 3/4" = 1' - 0"

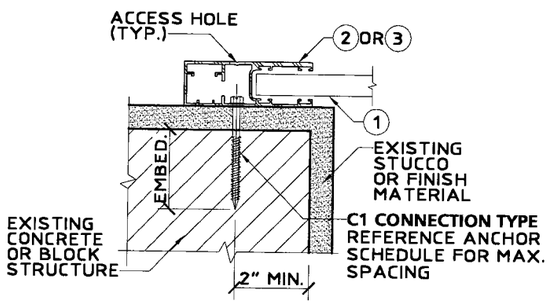

E WALL MOUNT (PLAN)
SCALE : 3" = 1' - 0"

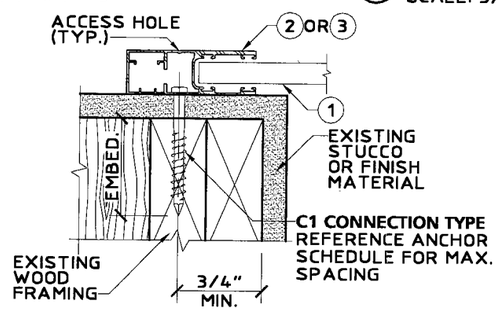

F WOOD FRAME WALL MOUNT (PLAN)
SCALE : 3" = 1' - 0"

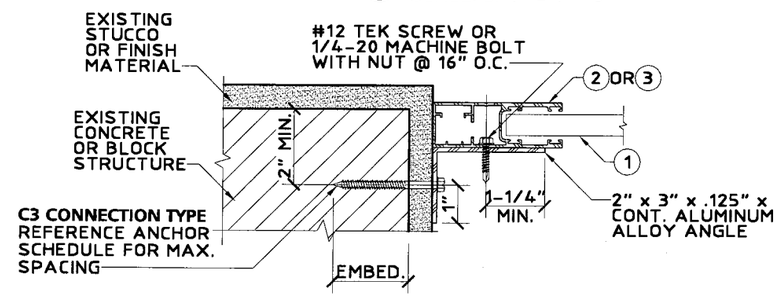

G INSIDE MOUNT (PLAN)
SCALE : 3" = 1' - 0"

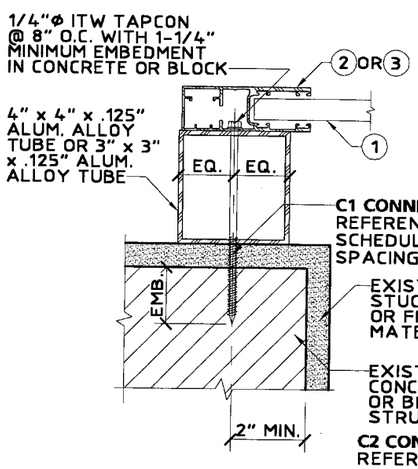

H BUILD-OUT MOUNT (PLAN)
SCALE : 3" = 1' - 0"

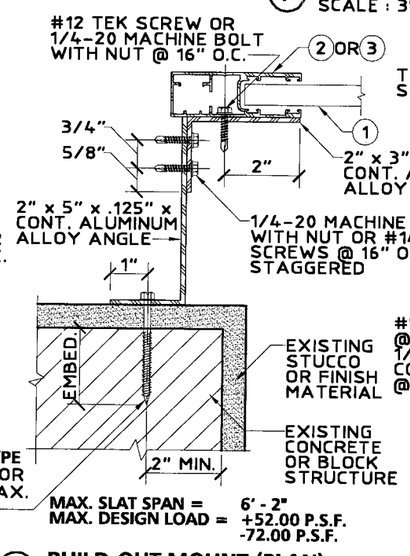

J BUILD-OUT MOUNT (PLAN)
SCALE : 3" = 1' - 0"

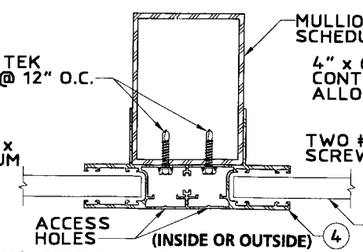

K SIDE RAIL TO MULLION DETAIL
SCALE : 3" = 1' - 0"

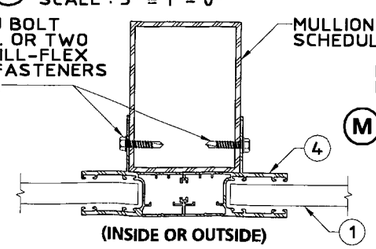

L SIDE RAIL TO MULLION DETAIL
SCALE : 3" = 1' - 0"

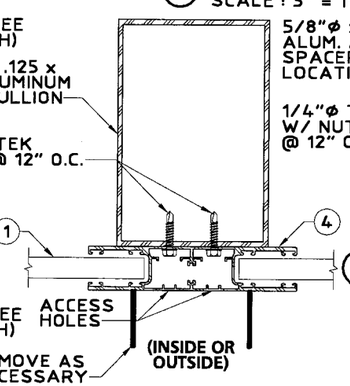

M SIDE RAIL TO MULLION DETAIL
SCALE : 3" = 1' - 0"

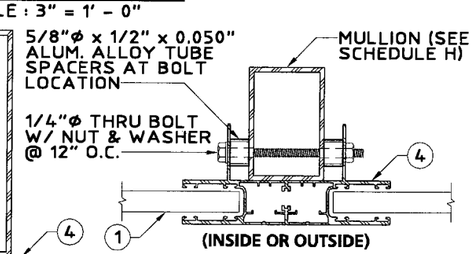

N SIDE RAIL TO MULLION DETAIL
SCALE : 3" = 1' - 0"

Miami Dade Product Control Division

06-1108.01
01/01/2009

Thornton Tomasetti
330 N. Andrews Ave., Suite 450 • Ft. Lauderdale, FL 33301
T 954.522.3690 • F 954.522.3691 • COA # 7519
Website: www.ThorntonTomasetti.com

Copyright © 2006 Thornton-Tomasetti, Inc.
HI-ROLLER 50 LICENSED BY HI-TECH SHUTTER GROUP, INC.

HI-ROLLER 50 ROLL-UP SHUTTER

Manufacturers of Hurricane & Security Protection Products
HURST AWNING COMPANY, INC. "QUALITY SERVICE SINCE 1957"
6865 N.W. 36th Avenue
Miami, Florida 33147
Phone: (305) 635-0900
Toll Free: (800) 327-0905
Fax: (305) 634-9078

V.J. Kruezevich
Professional Engineer
FL License No.: PE0010983

SEP 30 2006

revisions

no	date	by	description
0	04/10/2006	VJK	PREVIOUSLY DRAWING NO. 01-207

HTSG I.D. # 06093006360D

date 04/10/2006	
scale AS NOTED	drawn by MCR
design by VJK	checked by VJK
drawing no. 06-344	
sheet 3 of 13	

Print Information: P:\FL1\KA\CADD\Associations\Hi-Tech\HURST\06-344\RO-sub\06-344-03.dwg MCantu 10/04/2006 12:20:19pm 09/30/06 11:28

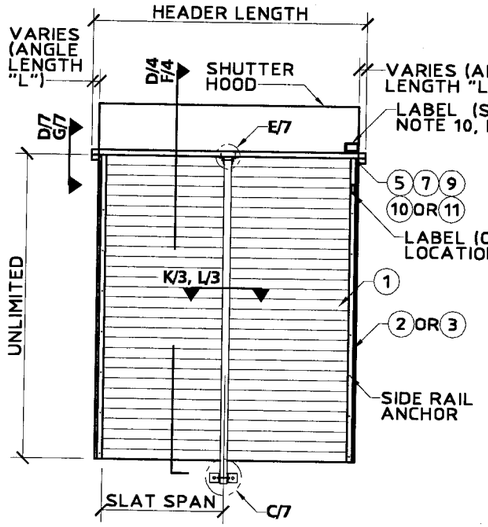

A ELEVATION OF TWO SPAN CONDITION
N.T.S.

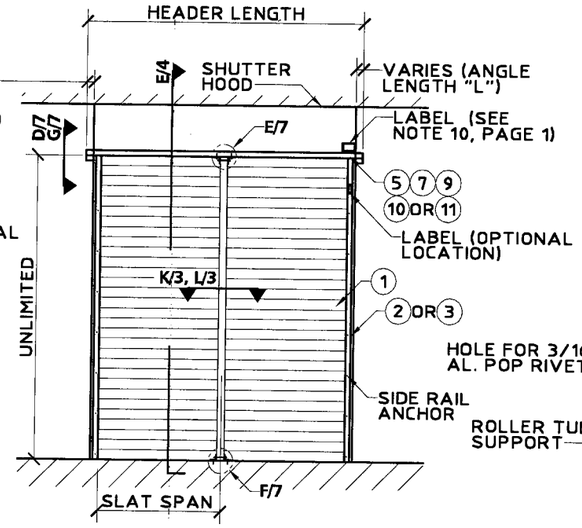

B ELEVATION OF TWO SPAN CONDITION
N.T.S.

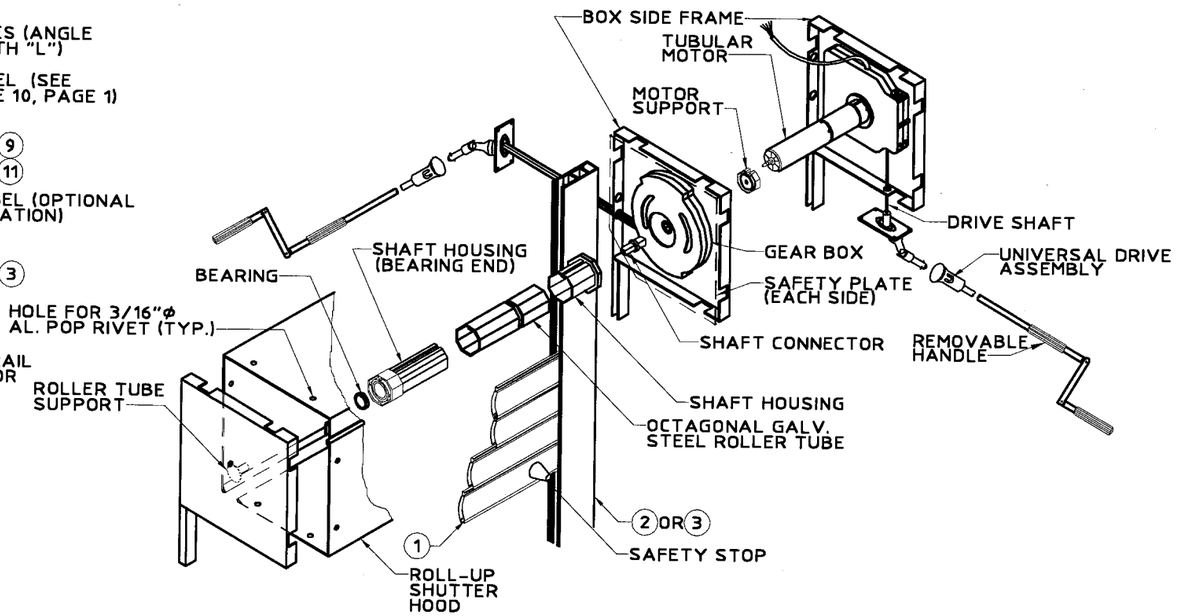

C ISOMETRIC OF CAST HEADER ASSEMBLY
N.T.S.

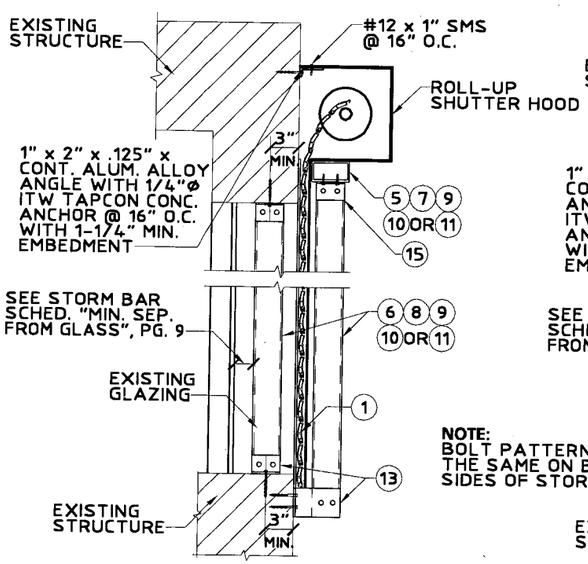

D WALL MOUNT SECTION WITH STORM BARS
SCALE: 3/4" = 1' - 0"

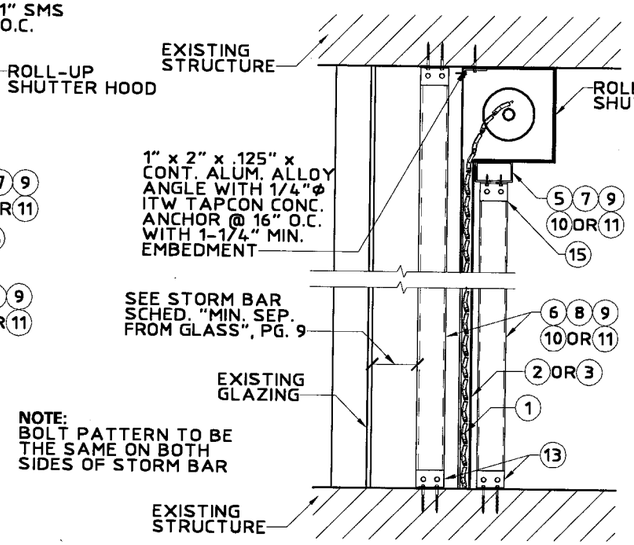

NOTE:
BOLT PATTERN TO BE THE SAME ON BOTH SIDES OF STORM BAR

E INSIDE MOUNT SECTION WITH STORM BARS
SCALE: 3/4" = 1' - 0"

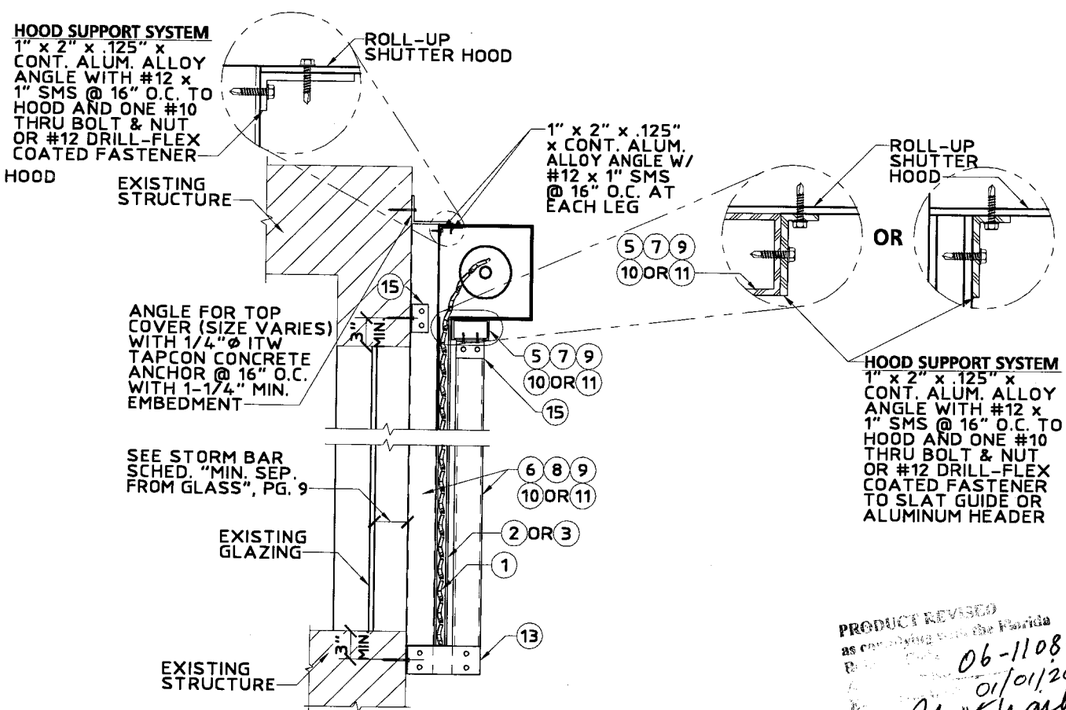

F BUILD-OUT SECTION WITH STORM BARS
SCALE: 3/4" = 1' - 0"

PRODUCT REVISED
as complying with the Florida
06-1108.01
01/01/2009
By Miami Dade Product Control Division

Thornton Tomasetti
330 N. Andrews Ave., Suite 450 • Ft. Lauderdale, FL 33301
T 954.522.3690 • F 954.522.3691 • COA # 7519
Website: www.ThorntonTomasetti.com

Copyright © 2006 Thornton-Tomasetti, Inc.
HI-ROLLER 50 LICENSED BY HI-TECH SHUTTER GROUP, INC.

HI-ROLLER 50 ROLL-UP SHUTTER

Manufacturers of Hurricane & Security Protection Products
HURST AWNING COMPANY, INC.
"QUALITY SERVICE SINCE 1957"
6865 N.W. 36th Avenue
Miami, Florida 33147
Phone: (305) 635-0900
Toll Free: (800) 327-0905
Fax: (305) 634-9078

V.J. Knezevich
Professional Engineer
FL License No.: PE 0010983

SEP 30 2006

revisions			
no	date	by	description
0	04/10/2006	VJK	PREVIOUSLY DRAWING NO. 01-207

HTSG I.D. # 06093006360D

date	04/10/2006
scale	AS NOTED
drawn by	MCR
design by	VJK
checked by	VJK
drawing no.	06-344

Print Information: P:\FL1\KA\CADD\Associations\Hi-Tech\HURST\06-344\RO-sub\06-344-04.dwg MCantu 10/04/2006 12:20:26pm 09/30/06 11:28

SINGLE ALLOWABLE SLAT SPAN SCHEDULE B-1

CONTRACTOR / INSTALLER TO UTILIZE SMALLEST OF POSITIVE LOAD SPAN AND NEGATIVE LOAD SPAN FOR EACH OPENING

DESIGN LOAD (P.S.F.)	SPANS FOR POSITIVE LOADS	SPANS FOR NEGATIVE LOADS
	TOTAL SLAT SPAN (FT. - IN.)	TOTAL SLAT SPAN (FT. - IN.)
24.7	7' - 6"	8' - 11"
28.2	7' - 3"	8' - 6"
32.0	7' - 0"	8' - 2"
35.7	6' - 10"	7' - 11"
39.6	6' - 8"	7' - 7"
45.7	6' - 5"	7' - 3"
51.5	6' - 3"	7' - 0"
52.7	6' - 3"	6' - 11"
55.6	6' - 2"	6' - 10"
57.8	6' - 1"	6' - 9"
59.3	6' - 0"	6' - 8"
60.0	6' - 0"	6' - 8"
62.3	5' - 11"	6' - 7"
64.7	5' - 11"	6' - 6"
67.3	5' - 10"	6' - 5"
69.0	5' - 10"	6' - 4"
70.0	5' - 9"	6' - 4"
72.8	5' - 9"	6' - 3"
75.8	5' - 8"	6' - 2"
80.0	5' - 7"	6' - 0"
90.0	5' - 5"	5' - 9"
100.0	4' - 11"	5' - 4"
110.0	4' - 6"	4' - 10"
120.0	4' - 1"	4' - 5"
130.0	3' - 10"	4' - 1"
140.0	3' - 6"	3' - 9"
150.0	3' - 3"	3' - 6"
160.0	3' - 1"	3' - 4"
170.0	2' - 11"	3' - 1"
180.0	2' - 9"	2' - 11"
190.0	2' - 7"	2' - 9"
200.0	2' - 5"	2' - 8"
210.0	2' - 4"	2' - 6"
220.0	2' - 3"	2' - 5"

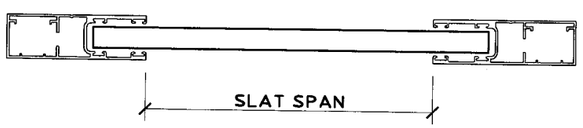

SINGLE SPAN LAYOUT

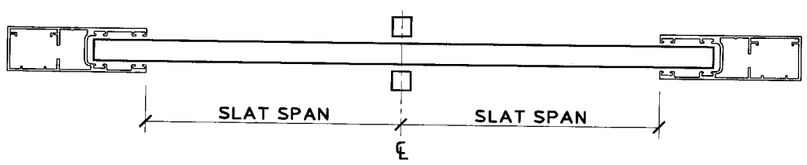

DOUBLE SPAN LAYOUT

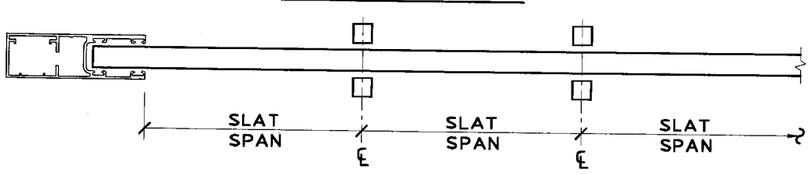

MULTIPLE SPAN LAYOUT

DOUBLE ALLOWABLE SLAT SPAN SCHEDULE B-2

CONTRACTOR / INSTALLER TO UTILIZE SMALLEST OF POSITIVE LOAD SPAN AND NEGATIVE LOAD SPAN FOR EACH OPENING

DESIGN LOAD (P.S.F.)	SPANS FOR POSITIVE LOADS	SPANS FOR NEGATIVE LOADS
	TOTAL SLAT SPAN (FT. - IN.)	TOTAL SLAT SPAN (FT. - IN.)
30.0	8' - 11"	10' - 5"
40.0	8' - 4"	9' - 0"
50.0	7' - 10"	8' - 1"
60.0	7' - 1"	7' - 4"
70.0	6' - 7"	6' - 10"
80.0	6' - 2"	6' - 4"
90.0	5' - 10"	6' - 0"
100.0	5' - 6"	5' - 8"
110.0	5' - 3"	5' - 5"
120.0	5' - 0"	5' - 2"
130.0	4' - 10"	5' - 0"
140.0	4' - 8"	4' - 10"
150.0	4' - 5"	4' - 8"
160.0	4' - 1"	4' - 5"
170.0	3' - 10"	4' - 2"
180.0	3' - 8"	3' - 11"
190.0	3' - 6"	3' - 8"
200.0	3' - 3"	3' - 6"
210.0	3' - 2"	3' - 4"
220.0	3' - 0"	3' - 2"

MORE THAN 2 ALLOWABLE SLAT SPAN SCHEDULE B-3

CONTRACTOR / INSTALLER TO UTILIZE SMALLEST OF POSITIVE LOAD SPAN AND NEGATIVE LOAD SPAN FOR EACH OPENING

DESIGN LOAD (P.S.F.)	SPANS FOR POSITIVE LOADS	SPANS FOR NEGATIVE LOADS
	TOTAL SLAT SPAN (FT. - IN.)	TOTAL SLAT SPAN (FT. - IN.)
30.0	8' - 5"	10' - 4"
40.0	7' - 10"	9' - 5"
50.0	7' - 5"	8' - 9"
60.0	7' - 1"	8' - 0"
70.0	6' - 9"	7' - 4"
80.0	6' - 7"	6' - 11"
90.0	6' - 3"	6' - 6"
100.0	5' - 11"	6' - 2"
110.0	5' - 8"	5' - 10"
120.0	5' - 2"	5' - 6"
130.0	4' - 9"	5' - 1"
140.0	4' - 5"	4' - 9"
150.0	4' - 1"	4' - 5"
160.0	3' - 10"	4' - 2"
170.0	3' - 8"	3' - 11"
180.0	3' - 5"	3' - 8"
190.0	3' - 3"	3' - 6"
200.0	3' - 1"	3' - 4"
210.0	2' - 11"	3' - 2"
220.0	2' - 10"	3' - 0"

MINIMUM SHUTTER SYSTEM SEPARATION FROM GLASS SCHEDULE B-4

POSITIVE DESIGN LOAD (P.S.F.)	ACTUAL SHUTTER SPAN (L) (FT. - IN.)	MINIMUM SEPARATION FOR INSTALLATIONS LESS THAN OR EQUAL TO 30'-0" ABOVE GRADE (INCHES)	MINIMUM SEPARATION FOR INSTALLATIONS GREATER THAN 30'-0" ABOVE GRADE (INCHES)
30.0	3' - 0"	2"	1-1/8"
	4' - 1"	2"	1-1/4"
	5' - 0"	2-1/2"	1-1/2"
	6' - 2"	2-1/2"	2-1/8"
	8' - 11"	5-7/8"	5-7/8"
40.0	3' - 0"	2"	1-1/8"
	4' - 1"	2"	1-1/4"
	5' - 0"	2-1/2"	1-5/8"
	6' - 2"	2-1/2"	2-1/2"
	8' - 4"	5-7/8"	5-7/8"
50.0	3' - 0"	2"	1-1/8"
	4' - 1"	2"	1-3/8"
	6' - 2"	2-7/8"	2-7/8"
	7' - 10"	5-5/8"	5-5/8"
60.0	4' - 1"	2"	1-1/2"
	5' - 0"	2"	2"
	6' - 2"	3-1/8"	3-1/8"
	7' - 1"	5"	5"
70.0	4' - 1"	2"	1-1/2"
	5' - 0"	2-1/8"	2-1/8"
	6' - 2"	3-1/2"	3-1/2"
	6' - 9"	4-3/4"	4-3/4"
80.0	4' - 1"	2"	1-1/2"
	5' - 0"	2-1/4"	2-1/4"
	6' - 2"	3-7/8"	3-7/8"
	6' - 7"	4-3/4"	4-3/4"
90.0	4' - 1"	2"	1-5/8"
	5' - 0"	2-3/8"	2-3/8"
	6' - 2"	4-1/4"	4-1/4"
	6' - 3"	4-1/2"	4-1/2"
100.0	3' - 0"	1-1/4"	1-1/4"
	4' - 1"	2"	1-5/8"
	5' - 11"	4-1/4"	4-1/4"

NOTE:

INTERPOLATE FOR SLAT SPANS & DEFLECTION BETWEEN THOSE SHOWN ON THIS SHEET.

PRODUCT REVIEWED as complying with the Florida Building Code
Application No. 06-1108.01
Approval Date 01/01/2009
By: Miami Dade Product Control Division

Thornton Tomasetti
330 N. Andrews Ave., Suite 450 • Ft. Lauderdale, FL 33301
T 954.522.3690 • F 954.522.3691 • COA # 7519
Website: www.ThorntonTomasetti.com

Copyright © 2006 Thornton-Tomasetti, Inc.
HI-ROLLER 50 LICENSED BY HI-TECH SHUTTER GROUP, INC.

HI-ROLLER 50 ROLL-UP SHUTTER

Manufacturers of Hurricane & Security Protection Products
HURST AWNING COMPANY, INC. "QUALITY SERVICE SINCE 1937"
6865 N.W. 36th Avenue
Miami, Florida 33147
Phone: (305) 635-0900
Toll Free: (800) 327-0905
Fax: (305) 634-9078

V.J. Knezevich
Professional Engineer
FL License No.: PE0010983

SEP 30 2006

revisions

no	date	by	description
0	04/10/2006	VJK	PREVIOUSLY DRAWING NO. 01-207

HTSG I.D. # 060930006360D

date 04/10/2006	
scale AS NOTED	drawn by MCR
design by VJK	checked by VJK
drawing no. 06-344	
sheet 5 of 13	

Print Information: P:\FL1\KA\CADD\Associations\Hi-Tech\HURST\06-344\RO-sub\06-344-05.dwg MCantu 10/04/2006 12:20:32pm 09/30/06 11:28

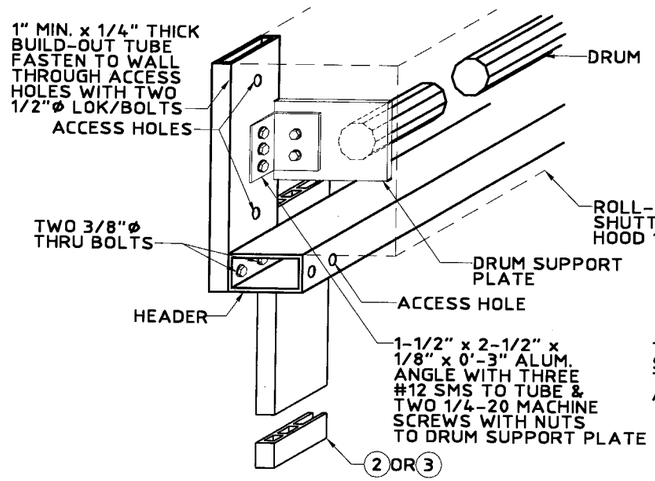

A DRUM SUPPORT & HEADER TO BUILD-OUT DETAIL
SCALE: 1-1/2" = 1' - 0"

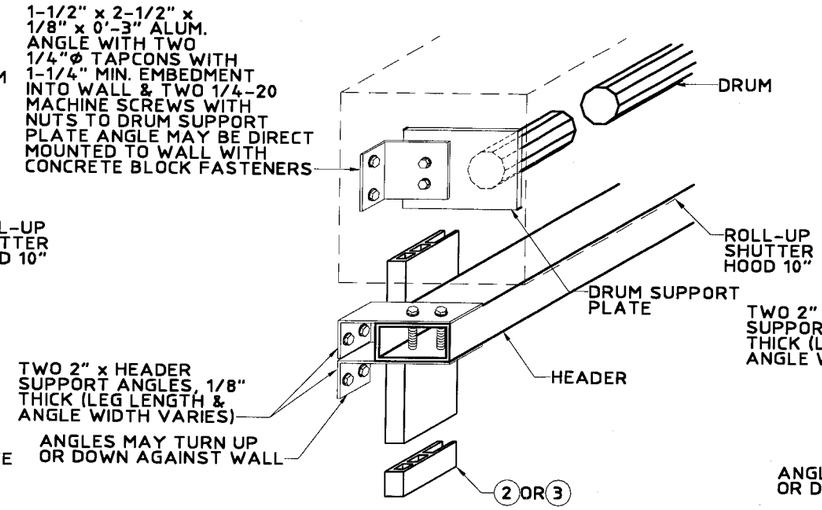

B ALT. DRUM SUPPORT & HEADER TO WALL DETAIL
SCALE: 1-1/2" = 1' - 0"

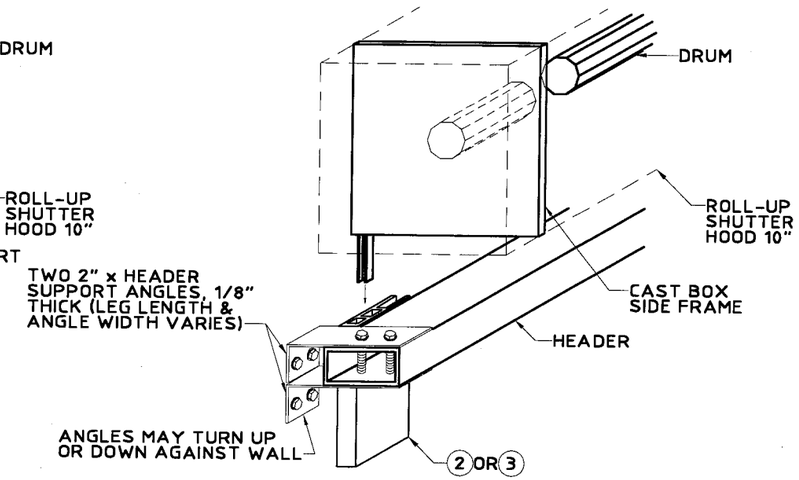

C CAST DRUM SUPPORT & HEADER DETAIL
SCALE: 1-1/2" = 1' - 0"

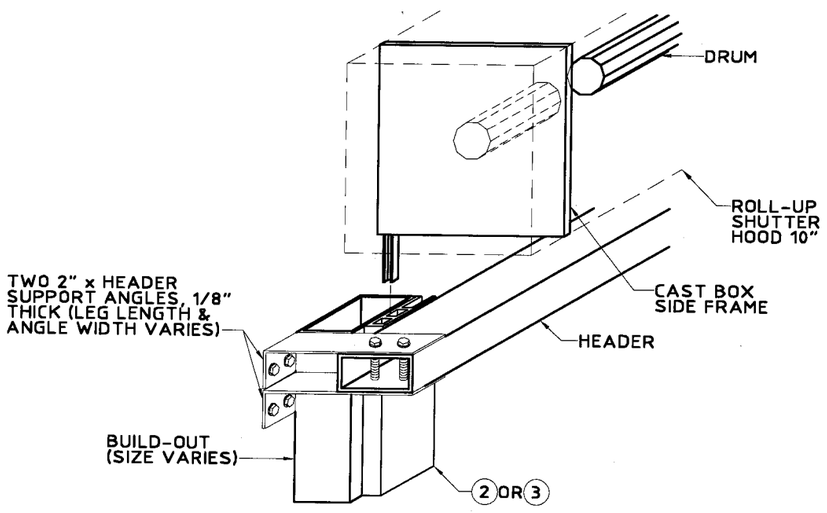

D CAST DRUM SUPPORT & HEADER DETAIL WITH BUILD-OUT
SCALE: 1-1/2" = 1' - 0"

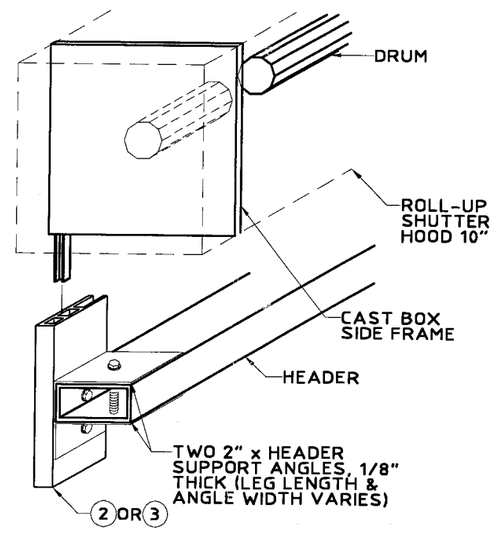

E HEADER SUPPORT ON ANGLE ATTACHED TO GUIDE
SCALE: 1-1/2" = 1' - 0"

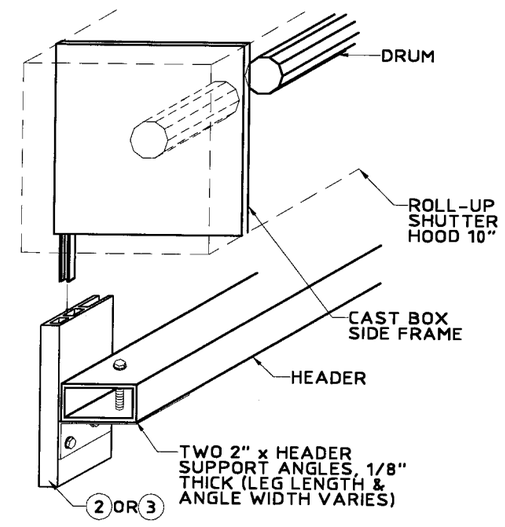

F HEADER SUPPORT ON ANGLE ATTACHED TO GUIDE
SCALE: 1-1/2" = 1' - 0"

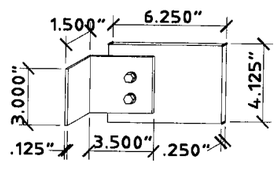

G DRUM SUPPORT PLATE DETAIL
SCALE: 1-1/2" = 1' - 0"

PRODUCT REVISED
as complying with the Florida
Buiding Code
Acceptance No. 06-1108.04
Expiration Date 01/01/2009
By
Miami Dade Product Control
Division

Thornton Tomasetti
330 N. Andrews Ave., Suite 480 • Ft. Lauderdale, FL 33301
T 954.522.3690 • F 954.522.3691 • COA # 7519
Website: www.ThorntonTomasetti.com

Copyright © 2006 Thornton-Tomasetti, Inc.
HI-ROLLER 50 LICENSED BY HI-TECH SHUTTER GROUP, INC.

HI-ROLLER 50 ROLL-UP SHUTTER

Manufacturers of Hurricane & Security Protection Products
HURST AWNING COMPANY, INC. QUALITY SERVICE SINCE 1937
6865 N.W. 36th Avenue
Miami, Florida 33147
Phone: (305) 635-0900
Toll Free: (800) 327-0905
Fax: (305) 634-9078

V.J. Knezevich
Professional Engineer
FL License No. PE 0010983

SEP 30 2006

revisions

no	date	by	description
0	04/10/2006	VJK	PREVIOUSLY DRAWING NO. 01-207

HTSG I.D. # 060930063 60D

date 04/10/2006	
scale AS NOTED	drawn by MCR
design by VJK	checked by VJK
drawing no. 06-344	
sheet 6 of 13	

Print Information: P:\FL1\KA\CADD\Associations\Hi-Tech\HURST\06-344\RO-sub\06-344-06.dwg MCantu 10/04/2006 12:20:38pm 09/30/06 11:28

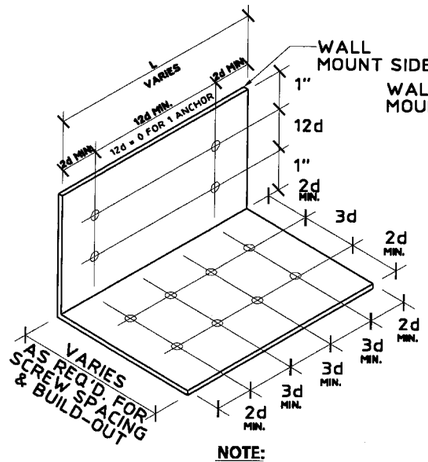

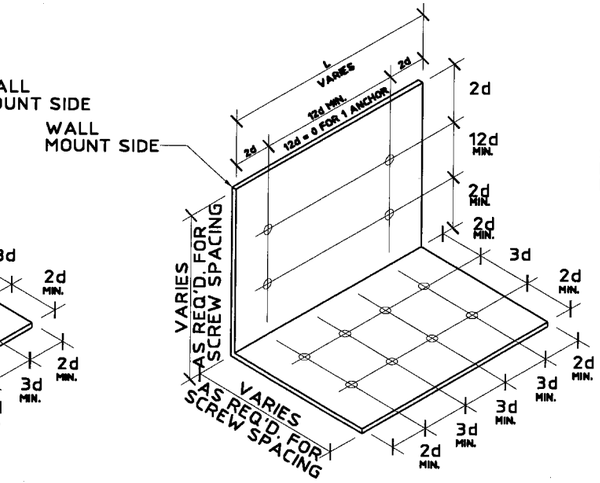

NOTE:

ANGLE ISOMETRIC DEPICTS MAXIMUM NUMBER OF ANCHOR BOLTS AND TEK SCREWS, AND THEIR ARRANGEMENT. FOR LESS ANCHORS OR TEK SCREWS, ANY 3d OR 12d DIMENSIONS MAY BE = 0.

(A) TENSION CONNECTION TO WALL FOR STORM BAR, HEADER, OR MULLION
N.T.S.

(B) SHEAR CONNECTION TO FLOOR OR CEILING FOR STORM BAR, HEADER, OR MULLION
N.T.S.

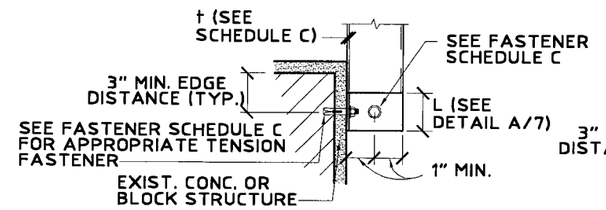

(C) STORM BAR / MULLION TO WALL SECTION
SCALE: 1-1/2" = 1' - 0"

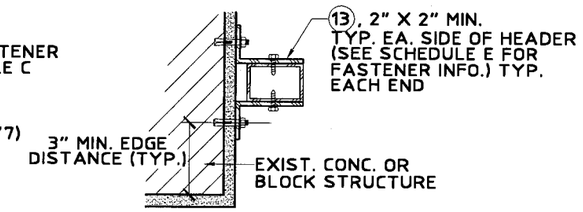

(D) HEADER TO WALL SECTION
SCALE: 1-1/2" = 1' - 0"

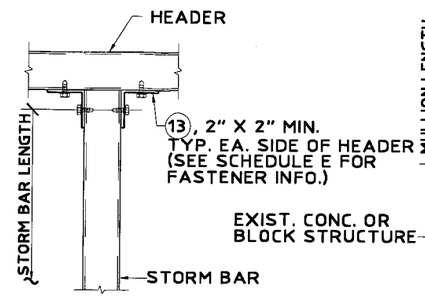

(E) HEADER TO STORM BAR DETAIL
SCALE: 1-1/2" = 1' - 0"

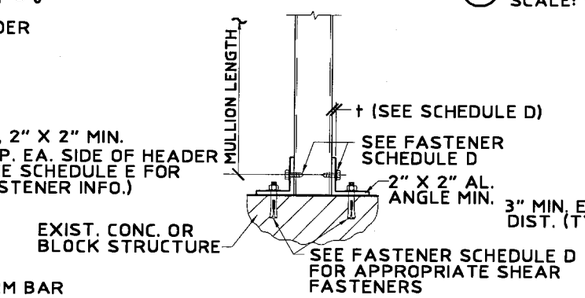

(F) STORM BAR / MULLION TO FLOOR / CEILING DETAIL
SCALE: 1-1/2" = 1' - 0"

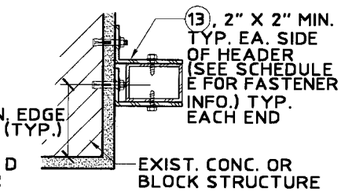

(G) HEADER TO WALL SECTION
SCALE: 1-1/2" = 1' - 0"

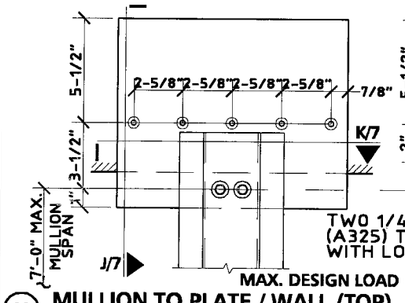

(H) MULLION TO PLATE / WALL (TOP)
SCALE: 1-1/2" = 1' - 0"

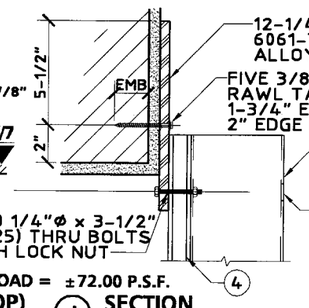

(J) SECTION
SCALE: 1-1/2" = 1' - 0"

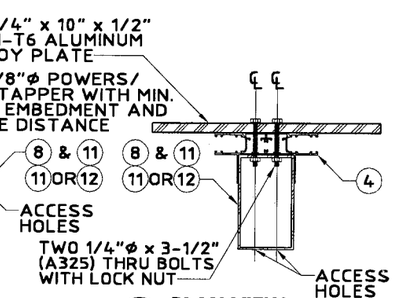

(K) PLAN VIEW
SCALE: 1-1/2" = 1' - 0"

ANCHOR AND FASTENER SCHEDULE C (FOR TENSION CONNECTION)

APPROVED ANCHOR	SUBSTRATE	STORM BAR REACTION (LBS.)	ANCHOR DIAMETER (IN.)	EMBED. (IN.)	EDGE DIST. (IN)	ANCHOR SPACING (IN.)	QUANTITY OF ANCHORS EACH ANGLE	ANGLE THICKNESS (IN.)	ACTUAL LENGTH OF ANGLE	MINIMUM # OF TEK SCREWS IN EACH ANGLE	SIZE OF TEK SCREWS
Powers Calk In	CMU	440	0.25	0.875	3	2.5	1	0.125	3.5	1	#12
Elco Crete-Flex	CMU	584	0.25	1.25	2.5	3	1	0.125	4.5	1	#12
Powers Calk In	CMU	880	0.25	0.875	3	2.5	2	0.25	3.5	2	#12
Elco Crete-Flex	CMU	1020	0.25	1.25	3	2.5	2	0.25	3.5	2	#12
Powers Tapper	CMU	1168	0.25	1.375	2.5	3	2	0.25	3.5	2	#12
Powers Lok/Bolt	4 ksi concrete	1350	0.375	1.625	4.5	3.75	1	0.25	3	2	#14
Powers Lok/Bolt	4 ksi concrete	1440	0.25	1.0625	3	2.5	2	0.25	3.5	2	#14
Elco Crete-Flex	CMU	2336	0.25	1.25	2.5	3	4	0.25	4.5	4	#12
Powers Lok/Bolt	4 ksi concrete	2508	0.5	2.25	6	5	1	0.25	5	4	#14
Powers Lok/Bolt	4 ksi concrete	2700	0.375	1.625	4.5	3.75	2	0.25	5.25	4	#14
Powers Lok/Bolt	4 ksi concrete	5015	0.5	2.25	6	5	2	0.313	7	7	#14

ANCHOR AND FASTENER SCHEDULE D (FOR SHEAR CONNECTION)

SBCCI PST & ESI APPROVED ANCHOR	SUBSTRATE	STORM BAR REACTION (LBS.)	ANCHOR DIAMETER (IN.)	EMBED. (IN.)	EDGE DIST. (IN.)	ANCHOR SPACING (IN.)	QUANTITY OF ANCHORS EACH ANGLE	ANGLE THICKNESS (IN.)	MIN. "L" EACH ANGLE (IN.)	MIN. # OF TEK SCREWS IN EACH ANGLE	SIZE OF TEK SCREWS
Elco Crete-Flex	CMU	660	0.25	1.25	2.5	2.5	1	0.125	1.5	2	#12
Powers Calk In	CMU	670	0.25	0.875	3	2.5	1	0.125	1.5	2	#12
Powers Tapper	CMU	1020	0.25	1.375	2.5	3	2	0.125	4	2	#12
Elco Crete-Flex	CMU	1320	0.25	1.25	2.5	3	2	0.125	4	2	#14
Powers Calk In	CMU	1340	0.25	0.875	3	2.5	2	0.125	4	2	#14
Powers Lok/Bolt	4 ksi concrete	1625	0.375	1.625	4.5	3.75	1	0.125	3.25	3	#12
Powers Lok/Bolt	4 ksi concrete	1630	0.25	1.0625	3	2.5	2	0.125	3.5	3	#12
Elco Crete-Flex	CMU	2640	0.25	1.25	3	2.5	4	0.125	3.5	4	#14
Powers Lok/Bolt	4 ksi concrete	3250	0.375	1.625	4.5	3.75	2	0.125	5.25	6	#12
Powers Lok/Bolt	4 ksi concrete	3972	0.5	2.25	6	5	2	0.125	7	6	#14
Powers Lok/Bolt	4 ksi concrete	4875	0.375	1.625	4.5	3.75	3	0.125	5.25	7	#14

HEADER REACTION DETERMINATION SCHEDULE E

NUMBER OF STORM BARS	HEADER REACTION EACH END (LBS.)
1	.5 X ONE STORM BAR END REACTION
2	1 X ONE STORM BAR END REACTION
3 OR MORE	1.5 X ONE STORM BAR END REACTION

WOOD FASTENING NOTES:

GALVANIZED STEEL OR 410 STAINLESS STEEL WITH FLUOROCARBON COATING LAG SCREW FOR WOOD, MAY BE USED AT LOADS, QUANTITY AND EMBEDMENT INDICATED FOR BLOCK OR CONCRETE. EMBEDMENT SHALL BE AT THE CENTER OF A PRIMARY FRAMING MATERIAL SUCH AS A 2x WOOD STUD OR A 2x WOOD HEADER OR SILL PLATE. SEE SCHEDULES C & D FOR ANGLE, ANCHOR, FASTENER QUANTITY AND SIZE.

PRODUCT REVISED
as complying with the Florida
Buiding Code
Acceptance No. 06-1108.01
Expiration Date 01/01/2009
By
Miami Dade Product Control
Division

Thornton Tomasetti
330 N. Andrews Ave., Suite 450 • Ft. Lauderdale, FL 33301
T 954.522.3690 • F 954.522.3691 • COA # 7519
Website: www.ThorntonTomasetti.com

Copyright © 2006 Thornton-Tomasetti, Inc.
HI-ROLLER 50 LICENSED BY HI-TECH SHUTTER GROUP, INC.

HI-ROLLER 50 ROLL-UP SHUTTER

Manufacturers of Hurricane & Security Protection Products
6865 N.W. 36th Avenue
Miami, Florida 33147
Phone: (305) 635-0900
Toll Free: (800) 327-0905
Fax: (305) 634-9078
HURST AWNING COMPANY, INC. QUALITY SERVICE SINCE 1937

V.J. Knezevich
Professional Engineer
FL License No.: PE 0010983

SEP 30 2006

revisions			
no	date	by	description
0	04/10/2006	VJK	PREVIOUSLY DRAWING NO. 01-207

HTSG I.D. # 06093006360D

date 04/10/2006
scale AS NOTED
drawn by MCR
design by VJK
checked by VJK
drawing no. 06-344
sheet 7 of 13

Print Information: P:\FL1\KA\CADD\Associations\Hi-Tech\HURST\06-344\R0-sub\06-344-07.dwg MCantu 10/04/2006 12:43:40pm 09/30/06 11:28

Print Information: P:\FL1\KA\CADD\Associations\Hi-Tech\HURST\06-344\RO-sub\06-344-08.dwg MContu 10/04/2006 12:20:48pm 09/30/06 11:28

EXTERIOR STORM BAR SPAN SCHEDULE ⟨F⟩ - MULTIPLE SPAN CONDITION (ALL SPANS)

NEGATIVE DESIGN LOAD (P.S.F.)	SLAT SPAN OR STORM BAR SPACING (IN.)	STORM BAR TYPE AND MAXIMUM LENGTH (INCHES)									
		6 3/4" x 2-1/2"	6 END REACTION (LBS.)	8 1" x 3"	8 END REACTION (LBS.)	11 2" x 3" HEAVY	11 END REACTION (LBS.)	9 2" x 6"	9 END REACTION (LBS.)	10 2" x 8"	10 END REACTION (LBS.)
30.0	48	80	503	97	608	141	883	159	991	196	1222
	60	72	566	88	685	127	992	142	1113	176	1374
	72	67	624	80	754	116	1090	130	1223	161	1512
	84	62	677	75	818	108	1181	121	1325	150	1638
	96	58	726	70	878	101	1266	114	1420	141	1757
	108	55	773	66	934	96	1345	107	1509	133	1868
	121	52	820	63	992	91	1426	102	1600	126	1982
40.0	36	80	503	97	608	141	883	159	991	196	1222
	48	70	586	85	709	123	1026	138	1151	171	1421
	60	63	659	77	798	111	1152	124	1292	153	1597
	72	58	726	70	878	101	1266	114	1420	141	1757
	84	54	788	65	952	94	1371	105	1538	131	1904
	96	51	845	61	1022	88	1468	99	1647	122	2041
	113	47	920	57	1113	81	1597	91	1792	113	2221
50.0	48	63	659	77	798	111	1152	124	1292	153	1597
	54	60	702	72	849	104	1224	117	1373	145	1699
	60	57	742	69	897	99	1293	111	1450	138	1795
	66	54	780	66	943	95	1358	106	1523	132	1886
	72	52	817	63	988	91	1420	102	1593	126	1973
	78	50	852	61	1030	87	1480	98	1660	122	2057
	105	44	996	53	1204	76	1725	85	1935	105	2400
60.0	48	58	726	70	878	101	1266	114	1420	141	1757
	54	55	773	66	934	96	1345	107	1509	133	1868
	60	52	817	63	988	91	1420	102	1593	126	1973
	66	50	859	60	1038	87	1492	97	1674	121	2074
	72	48	899	58	1087	83	1560	93	1750	116	2169
	78	46	937	56	1133	80	1626	90	1824	111	2262
	96	42	1045	51	1264	72	1810	81	2030	101	2519
72.0	48	53	799	64	967	93	1391	104	1560	129	1932
	54	50	850	61	1028	88	1478	98	1658	122	2054
	60	48	899	58	1087	83	1560	93	1750	116	2169
	66	46	945	55	1143	79	1639	89	1839	111	2279
	72	44	989	53	1196	76	1714	85	1923	106	2385
	78	42	1031	51	1247	73	1786	82	2004	102	2486
	81	42	1052	50	1272	72	1821	81	2043	100	2535
80.0	48	53	799	64	967	93	1391	104	1560	129	1932
	54	50	850	61	1028	88	1478	98	1658	122	2054
	60	48	899	58	1087	83	1560	93	1750	116	2169
	66	46	945	55	1143	79	1639	89	1839	111	2279
	72	44	989	53	1196	76	1714	85	1923	106	2385
	78	42	1031	51	1247	73	1786	82	2004	102	2486
	83	41	1065	50	1288	71	1844	80	2069	99	2567
90.0	36	48	899	58	1087	83	1560	93	1750	116	2169
	42	45	956	55	1156	79	1658	88	1860	109	2306
	48	43	1010	52	1222	75	1751	84	1964	104	2436
	54	41	1062	50	1284	71	1839	80	2062	99	2559
	60	40	1112	48	1344	68	1923	77	2157	95	2677
	66	38	1159	46	1401	66	2003	74	2246	92	2790
	78	38	1159	46	1401	66	2003	74	2246	92	2790
100.0	36	52	817	63	988	91	1420	102	1593	126	1973
	42	49	886	59	1071	84	1538	95	1725	117	2138
	48	46	950	55	1149	79	1648	89	1848	110	2291
	54	43	1010	52	1222	75	1751	84	1964	104	2436
	60	41	1068	50	1291	71	1848	80	2073	99	2572
	66	39	1122	47	1357	68	1941	76	2177	94	2702
	74	37	1191	45	1440	64	2056	72	2306	89	2867
110.0	36	50	859	60	1038	87	1492	97	1674	121	2074
	42	46	931	56	1126	81	1615	90	1812	112	2246
	48	44	999	53	1207	76	1730	85	1941	105	2408
	54	41	1062	50	1284	71	1839	80	2062	99	2559
	60	39	1122	47	1357	68	1941	76	2177	94	2702
	66	37	1179	45	1426	65	2037	72	2284	90	2839
	70	36	1216	44	1470	63	2097	70	2352	88	2927

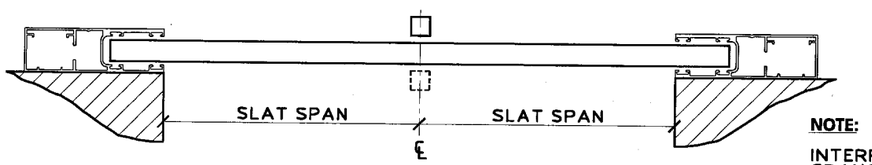

DOUBLE SPAN LAYOUT

NOTE:

INTERPOLATE FOR STORM BAR SPANS & REACTIONS BETWEEN THOSE SHOWN ON THIS SHEET.

EXTERIOR STORM BAR SPAN SCHEDULE ⟨F⟩ - MULTIPLE SPAN CONDITION (ALL SPANS)

NEGATIVE DESIGN LOAD (P.S.F.)	SLAT SPAN OR STORM BAR SPACING (IN.)	STORM BAR TYPE AND MAXIMUM LENGTH (INCHES)									
		6 3/4" x 2-1/2"	6 END REACTION (LBS.)	8 1" x 3"	8 END REACTION (LBS.)	11 2" x 3" HEAVY	11 END REACTION (LBS.)	9 2" x 6"	9 END REACTION (LBS.)	10 2" x 8"	10 END REACTION (LBS.)
120.0	30	52	817	63	988	91	1420	102	1593	126	1973
	36	48	899	58	1087	83	1560	93	1750	116	2169
	42	45	975	54	1178	77	1689	87	1895	107	2350
	48	42	1045	51	1264	72	1810	81	2030	101	2519
	54	40	1112	48	1344	68	1923	77	2157	95	2677
	60	38	1174	45	1420	65	2028	73	2274	90	2827
	66	36	1234	43	1492	62	2127	69	2385	86	2969
130.0	24	56	757	68	916	97	1319	109	1480	135	1832
	30	50	852	61	1030	87	1480	98	1660	122	2057
	36	46	937	56	1133	80	1626	90	1824	111	2262
	42	43	1016	52	1229	74	1761	83	1975	103	2450
	48	40	1090	49	1318	70	1886	78	2115	97	2625
	54	38	1159	46	1401	66	2003	74	2246	92	2790
	61	36	1235	43	1493	62	2128	69	2387	86	2971
140.0	18	62	677	75	818	108	1181	121	1325	150	1638
	24	54	788	65	952	94	1371	105	1538	131	1904
	30	49	886	59	1071	84	1538	95	1725	117	2138
	36	45	975	54	1178	77	1689	87	1895	107	2350
	42	41	1056	50	1277	72	1829	80	2052	100	2546
	48	39	1133	47	1370	67	1959	75	2197	94	2728
	58	35	1250	43	1511	61	2154	69	2415	85	3008
150.0	18	60	702	72	849	104	1224	117	1373	145	1699
	24	52	817	63	988	91	1420	102	1593	126	1973
	30	47	918	57	1110	82	1594	92	1788	113	2216
	36	43	1010	52	1222	75	1751	84	1964	104	2436
	42	40	1095	48	1324	69	1895	78	2126	96	2638
	48	38	1174	45	1420	65	2028	73	2274	90	2827
	56	34	1316	41	1591	58	2262	65	2537	81	3165
160.0	18	58	726	70	878	101	1266	114	1420	141	1757
	24	51	845	61	1022	88	1468	99	1647	122	2041
	30	46	950	55	1149	79	1648	89	1848	110	2291
	36	42	1045	51	1264	72	1810	81	2030	101	2519
	42	39	1133	47	1370	67	1959	75	2197	94	2728
	48	36	1215	44	1468	63	2095	70	2349	88	2923
	53	35	1279	42	1546	60	2201	67	2468	84	3076
170.0	18	56	750	68	907	98	1306	110	1465	137	1813
	24	49	872	60	1055	86	1515	96	1700	119	2106
	30	44	981	54	1186	77	1700	86	1907	107	2365
	36	41	1079	49	1304	70	1867	79	2094	98	2599
	42	38	1169	46	1414	65	2020	73	2265	91	2815
	48	35	1254	43	1515	61	2159	68	2421	85	3016
	50	35	1281	42	1548	60	2204	67	2471	83	3080
180.0	18	55	773	66	934	96	1345	107	1509	133	1868
	18	55	773	66	934	96	1345	107	1509	133	1868
	18	55	773	66	934	96	1345	107	1509	133	1868
	24	48	899	58	1087	83	1560	93	1750	116	2169
	30	43	1010	52	1222	75	1751	84	1964	104	2436
	36	40	1112	48	1344	68	1923	77	2157	95	2677
	47	35	1277	42	1544	60	2198	67	2465	84	3072
200.0	18	52	817	63	988	91	1420	102	1593	126	1973
	18	52	817	63	988	91	1420	102	1593	126	1973
	18	52	817	63	988	91	1420	102	1593	126	1973
	24	46	950	55	1149	79	1648	89	1848	110	2291
	30	41	1068	50	1291	71	1848	80	2073	99	2572
	36	38	1174	45	1420	65	2028	73	2274	90	2827
	42	35	1273	42	1538	60	2191	67	2456	84	3061
220.0	18	50	859	60	1038	87	1492	97	1674	121	2074
	18	50	859	60	1038	87	1492	97	1674	121	2074
	18	50	859	60	1038	87	1492	97	1674	121	2074
	24	44	999	53	1207	76	1730	85	1941	105	2408
	30	39	1122	47	1357	68	1941	76	2177	94	2702
	36	36	1234	43	1492	62	2127	69	2385	86	2969
	38	35	1270	42	1535	60	2185	68	2451	84	3053

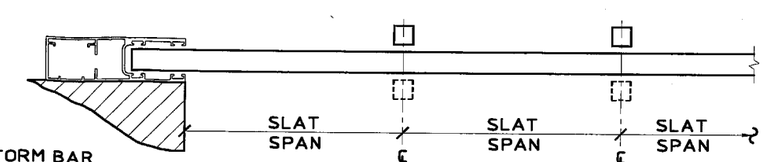

MULTIPLE SPAN LAYOUT

PRODUCT REVISED
as complying with the Florida
Building Code
Acceptance No. 06-1108.01
Expiration Date 01/01/2009
By
Miami Dade Product Control
Division

Thornton Tomasetti
330 N. Andrews Ave., Suite 450 • Ft. Lauderdale, FL 33301
T 954.522.3690 • F 954.522.3691 • COA # 7519
Website: www.ThorntonTomasetti.com

Copyright © 2006 Thornton-Tomasetti, Inc.
HI-ROLLER 50 LICENSED BY HI-TECH SHUTTER GROUP, INC.

HI-ROLLER 50 ROLL-UP SHUTTER

Manufacturers of Hurricane & Security Protection Products
HURST AWNING COMPANY, INC. "QUALITY SERVICE SINCE 1937"
6865 N.W. 36th Avenue
Miami, Florida 33147
Phone: (305) 635-0900
Toll Free: (800) 327-0905
Fax: (305) 634-9078

V.J. Kriezevich
Professional Engineer
FL License No.: PE 0010983

SEP 30 2006

revisions			
no	date	by	description
0	04/10/2006	VJK	PREVIOUSLY DRAWING NO. 01-267

HTSG I.D. # 06093006360D

date	04/10/2006
scale AS NOTED	drawn by MCR
design by VJK	checked by VJK
drawing no.	06-344
sheet 8 of 13	

INTERIOR STORM BAR SPAN SCHEDULE Ⓖ - MULTIPLE SPAN CONDITION (ALL SPANS)

POSITIVE DESIGN LOAD (P.S.F.)	SLAT SPAN OR STORM BAR SPACING (IN.)	STORM BAR TYPE AND MAXIMUM LENGTH (INCHES)														
		6	6	6	8	8	8	11	11	11	9	9	9	10	10	10
		3/4" x 2-1/2"	END REACTION (LBS.)	MIN. SEP. FROM GLASS (IN.)	1" x 3"	END REACTION (LBS.)	MIN. SEP. FROM GLASS (IN.)	2" x 3" HEAVY	END REACTION (LBS.)	MIN. SEP. FROM GLASS (IN.)	2" x 6"	END REACTION (LBS.)	MIN. SEP. FROM GLASS (IN.)	2" x 8"	END REACTION (LBS.)	MIN. SEP. FROM GLASS (IN.)
30.0	36	92	431	1-7/8"	111	521	2-1/8"	152	714	3"	182	853	2-5/8"	224	1050	2-3/4"
	48	80	503	1-5/8"	97	608	1-7/8"	141	883	3"	159	991	2-1/4"	196	1222	2-3/8"
	60	72	566	1-1/2"	88	685	1-3/4"	127	992	2-5/8"	142	1113	2"	176	1374	2-1/8"
	72	67	624	1-1/2"	80	754	1-1/2"	116	1090	2-3/8"	130	1223	1-7/8"	161	1512	2"
	84	62	677	1-1/2"	75	818	1-1/2"	108	1181	2-1/8"	121	1325	1-3/4"	150	1638	1-7/8"
	96	58	726	1-3/8"	70	878	1-1/2"	101	1266	2"	114	1420	1-5/8"	141	1757	1-3/4"
	107	55	769	1-3/8"	67	930	1-1/2"	96	1339	2"	108	1502	1-1/2"	133	1859	1-5/8"
40.0	36	80	503	1-5/8"	97	608	1-7/8"	141	883	3"	159	991	2-1/4"	196	1222	2-3/8"
	48	70	586	1-1/2"	85	709	1-5/8"	123	1026	2-1/2"	138	1151	2"	171	1421	2-1/8"
	60	63	659	1-1/2"	77	798	1-1/2"	111	1152	2-1/4"	124	1292	1-3/4"	153	1597	1-7/8"
	72	58	726	1-3/8"	70	878	1-1/2"	101	1266	2"	114	1420	1-5/8"	141	1757	1-3/4"
	84	54	788	1-3/8"	65	952	1-1/2"	94	1371	1-7/8"	105	1538	1-1/2"	131	1904	1-5/8"
	96	51	845	1-1/4"	61	1022	1-3/8"	88	1468	1-3/4"	99	1647	1-1/2"	122	2041	1-1/2"
	100	50	863	1-1/4"	60	1044	1-3/8"	86	1500	1-3/4"	97	1682	1-1/2"	120	2084	1-1/2"
50.0	48	63	659	1-1/2"	77	798	1-1/2"	111	1152	2-1/4"	124	1292	1-3/4"	153	1597	1-7/8"
	54	60	702	1-1/2"	72	849	1-1/2"	104	1224	2-1/8"	117	1373	1-5/8"	145	1699	1-3/4"
	60	57	742	1-3/8"	69	897	1-1/2"	99	1293	2"	111	1450	1-5/8"	138	1795	1-3/4"
	72	52	817	1-3/8"	63	988	1-3/8"	91	1420	1-7/8"	102	1593	1-1/2"	126	1973	1-1/2"
	84	49	886	1-1/4"	59	1071	1-3/8"	84	1538	1-3/4"	95	1725	1-1/2"	117	2138	1-1/2"
	96	46	950	1-1/4"	55	1149	1-1/4"	79	1648	1-5/8"	89	1848	1-1/2"	110	2291	1-1/2"
	94	46	940	1-1/4"	56	1136	1-1/4"	80	1630	1-5/8"	90	1828	1-1/2"	111	2267	1-1/2"
60.0	48	58	726	1-3/8"	70	878	1-1/2"	101	1266	2"	114	1420	1-5/8"	141	1757	1-3/4"
	54	55	773	1-3/8"	66	934	1-1/2"	96	1345	1-7/8"	107	1509	1-1/2"	133	1868	1-5/8"
	60	52	817	1-3/8"	63	988	1-3/8"	91	1420	1-7/8"	102	1593	1-1/2"	126	1973	1-1/2"
	72	48	899	1-1/4"	58	1087	1-3/8"	83	1560	1-3/4"	93	1750	1-1/2"	116	2169	1-1/2"
	78	46	937	1-1/4"	56	1133	1-3/8"	80	1626	1-5/8"	90	1824	1-1/2"	111	2262	1-1/2"
	84	45	975	1-1/4"	54	1178	1-1/4"	77	1689	1-5/8"	87	1895	1-3/8"	107	2350	1-1/2"
	85	44	981	1-1/4"	54	1186	1-1/4"	77	1700	1-5/8"	86	1907	1-3/8"	107	2365	1-1/2"
72.0	48	54	788	1-3/8"	65	952	1-1/2"	94	1371	1-7/8"	105	1538	1-1/2"	131	1904	1-5/8"
	54	51	838	1-1/4"	62	1013	1-3/8"	89	1457	1-7/8"	100	1634	1-1/2"	123	2024	1-1/2"
	60	49	886	1-1/4"	59	1071	1-3/8"	84	1538	1-3/4"	95	1725	1-1/2"	117	2138	1-1/2"
	66	46	931	1-1/4"	56	1126	1-3/8"	81	1615	1-5/8"	90	1812	1-1/2"	112	2246	1-1/2"
	72	45	975	1-1/4"	54	1178	1-1/4"	77	1689	1-5/8"	87	1895	1-3/8"	107	2350	1-1/2"
	78	43	1016	1-1/4"	52	1229	1-1/4"	74	1761	1-1/2"	83	1975	1-3/8"	103	2450	1-1/2"
	81	42	1037	1-1/4"	51	1253	1-1/4"	73	1795	1-1/2"	82	2013	1-3/8"	102	2498	1-3/8"
80.0	48	51	845	1-1/4"	61	1022	1-3/8"	88	1468	1-3/4"	99	1647	1-1/2"	122	2041	1-1/2"
	54	48	899	1-1/4"	58	1087	1-3/8"	83	1560	1-3/4"	93	1750	1-1/2"	116	2169	1-1/2"
	60	46	950	1-1/4"	55	1149	1-1/4"	79	1648	1-5/8"	89	1848	1-1/2"	110	2291	1-1/2"
	66	44	999	1-1/4"	53	1207	1-1/4"	76	1730	1-1/2"	85	1941	1-3/8"	105	2408	1-1/2"
	72	42	1045	1-1/4"	51	1264	1-1/4"	72	1810	1-1/2"	81	2030	1-3/8"	101	2519	1-3/8"
	78	40	1090	1-1/8"	49	1318	1-1/4"	70	1886	1-1/2"	78	2115	1-3/8"	97	2625	1-3/8"
	79	40	1097	1-1/8"	48	1326	1-1/4"	69	1898	1-1/2"	78	2129	1-3/8"	96	2642	1-3/8"
90.0	42	51	838	1-1/4"	62	1013	1-3/8"	89	1457	1-7/8"	100	1634	1-1/2"	123	2024	1-1/2"
	48	48	899	1-1/4"	58	1087	1-3/8"	83	1560	1-3/4"	93	1750	1-1/2"	116	2169	1-1/2"
	54	45	956	1-1/4"	55	1156	1-1/4"	79	1658	1-5/8"	88	1860	1-1/2"	109	2306	1-1/2"
	60	43	1010	1-1/4"	52	1222	1-1/4"	75	1751	1-1/2"	84	1964	1-3/8"	104	2436	1-1/2"
	66	41	1062	1-1/8"	50	1284	1-1/4"	71	1839	1-1/2"	80	2062	1-3/8"	99	2559	1-3/8"
	72	40	1112	1-1/8"	48	1344	1-1/4"	68	1923	1-1/2"	77	2157	1-3/8"	95	2677	1-3/8"
	75	39	1135	1-1/8"	47	1373	1-1/4"	67	1963	1-1/2"	75	2202	1-1/4"	93	2734	1-3/8"
100.0	36	52	817	1-3/8"	63	988	1-3/8"	91	1420	1-7/8"	102	1593	1-1/2"	126	1973	1-1/2"
	42	49	886	1-1/4"	59	1071	1-3/8"	84	1538	1-3/4"	95	1725	1-1/2"	117	2138	1-1/2"
	48	46	950	1-1/4"	55	1149	1-1/4"	79	1648	1-5/8"	89	1848	1-1/2"	110	2291	1-1/2"
	54	43	1010	1-1/4"	52	1222	1-1/4"	75	1751	1-1/2"	84	1964	1-3/8"	104	2436	1-1/2"
	60	41	1068	1-1/8"	50	1291	1-1/4"	71	1848	1-1/2"	80	2073	1-3/8"	99	2572	1-3/8"
	66	39	1122	1-1/8"	47	1357	1-1/4"	68	1941	1-1/2"	76	2177	1-3/8"	94	2702	1-3/8"
	71	38	1166	1-1/8"	46	1409	1-1/4"	65	2014	1-1/2"	73	2258	1-1/4"	91	2806	1-3/8"
110.0	36	50	859	1-1/4"	60	1038	1-3/8"	87	1492	1-3/4"	97	1674	1-1/2"	121	2074	1-1/2"
	42	46	931	1-1/4"	56	1126	1-3/8"	81	1615	1-5/8"	90	1812	1-1/2"	112	2246	1-1/2"
	48	44	999	1-1/4"	53	1207	1-1/4"	76	1730	1-1/2"	85	1941	1-3/8"	105	2408	1-1/2"
	54	41	1062	1-1/8"	50	1284	1-1/4"	71	1839	1-1/2"	80	2062	1-3/8"	99	2559	1-3/8"
	60	39	1122	1-1/8"	47	1357	1-1/4"	68	1941	1-1/2"	76	2177	1-3/8"	94	2702	1-3/8"
	66	37	1179	1-1/8"	45	1426	1-1/4"	65	2037	1-1/2"	72	2284	1-1/4"	90	2839	1-3/8"
	68	37	1198	1-1/8"	45	1448	1-1/8"	64	2067	1-1/2"	71	2318	1-1/4"	89	2883	1-3/8"
120.0	30	52	817	1-3/8"	63	988	1-3/8"	91	1420	1-7/8"	102	1593	1-1/2"	126	1973	1-1/2"
	36	48	899	1-1/4"	58	1087	1-3/8"	83	1560	1-3/4"	93	1750	1-1/2"	116	2169	1-1/2"
	42	45	975	1-1/4"	54	1178	1-1/4"	77	1689	1-5/8"	87	1895	1-3/8"	107	2350	1-1/2"
	48	42	1045	1-1/4"	51	1264	1-1/4"	72	1810	1-1/2"	81	2030	1-3/8"	101	2519	1-3/8"
	54	40	1112	1-1/8"	48	1344	1-1/4"	68	1923	1-1/2"	77	2157	1-3/8"	95	2677	1-3/8"
	60	38	1174	1-1/8"	45	1420	1-1/4"	65	2028	1-1/2"	73	2274	1-1/4"	90	2827	1-3/8"
	62	37	1195	1-1/8"	45	1444	1-1/8"	64	2062	1-1/2"	72	2312	1-1/4"	89	2875	1-3/8"

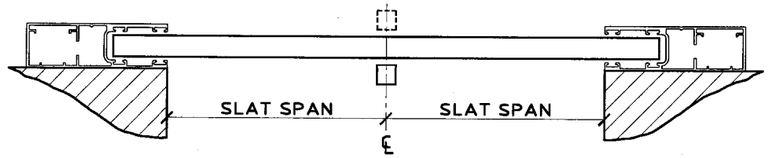

DOUBLE SPAN LAYOUT

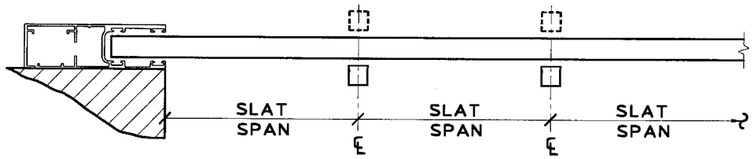

MULTIPLE SPAN LAYOUT

NOTE:

INTERPOLATE FOR STORM BAR SPANS & REACTIONS BETWEEN THOSE SHOWN ON THIS SHEET.

PRODUCT REVISED
as complying with the Florida
Buiding Code
Acceptance No 06-1108.01
Expiration Date 01/01/2009
By
Miami Dade Product Control
Division

Thornton Tomasetti
330 N. Andrews Ave., Suite 450 • Ft. Lauderdale, FL 33301
T 954.522.3690 • F 954.522.3691 • COA # 7519
Website: www.ThorntonTomasetti.com

Copyright © 2006 Thornton-Tomasetti, Inc.
HI-ROLLER 50 LICENSED BY HI-TECH SHUTTER GROUP, INC.

HI-ROLLER 50 ROLL-UP SHUTTER

Manufacturers of Hurricane & Security Protection Products
6865 N.W. 36th Avenue
Miami, Florida 33147
Phone: (305) 635-0900
Toll Free: (800) 327-0905
Fax: (305) 634-9078
HURST AWNING COMPANY, INC.
"QUALITY SERVICE SINCE 1937"

V.J. Knezevich
Professional Engineer
FL License No.: FE 0010983

SEP 30 2006

no	date	by	description
0	04/10/2006	VJK	PREVIOUSLY DRAWING NO. 01-207

revisions

HTSG I.D. # 060930063360D

date 04/10/2006
scale AS NOTED
drawn by MCR
design by VJK
checked by VJK
drawing no. 06-344
sheet 9 of 13

Print Information: P:\FL1\KA\CADD\Associations\Hi-Tech\HURST\06-344\RO-sub\06-344-09.dwg MCantu 10/04/2006 12:20:54pm 09/30/06 11:28

PERMANENT MULLION SPAN SCHEDULE ⟨H⟩

NEGATIVE DESIGN LOAD (P.S.F.)	SLAT SPAN OR STORM BAR SPACING (IN.)	MULLION TYPE AND MAXIMUM LENGTH (INCHES)					
		(11) 2" x 3" HEAVY	(11) END REACTION (LBS.)	(8) & (11) 1" x 3" 2" x 3" HEAVY	(8) & (11) END REACTION (LBS.)	(12) 4" x 6"	(12) END REACTION (LBS.)
30.0	48	107	613	123	704	167	958
	60	100	699	115	803	157	1093
	72	95	780	109	897	148	1220
	84	90	857	104	985	142	1341
	96	87	931	100	1070	136	1456
	108	84	1002	96	1152	131	1567
	121	81	1076	93	1237	126	1683
40.0	36	106	630	121	724	165	985
	48	97	742	112	853	152	1161
	60	91	847	105	973	142	1324
	72	86	945	99	1086	135	1478
	84	82	1038	95	1194	129	1624
	96	79	1128	91	1297	123	1764
	113	75	1249	86	1436	117	1947
50.0	48	90	861	104	990	141	1347
	54	87	923	100	1061	136	1443
	60	85	982	97	1129	132	1537
	66	82	1040	94	1196	128	1627
	72	80	1097	92	1260	125	1715
	78	78	1151	90	1324	122	1801
	105	71	1384	82	1591	108	2103
60.0	48	85	972	98	1118	133	1521
	54	82	1042	94	1198	128	1630
	60	80	1109	91	1275	124	1735
	66	77	1175	89	1350	121	1837
	72	75	1238	87	1423	118	1935
	78	73	1300	84	1495	113	2007
	96	69	1478	79	1699	103	2210
72.0	48	81	1078	93	1239	126	1686
	54	78	1155	90	1327	122	1806
	60	76	1229	87	1413	118	1923
	66	73	1302	84	1496	113	2009
	72	72	1372	82	1577	109	2090
	78	70	1441	80	1656	105	2168
	82	69	1486	79	1708	103	2218
80.0	48	77	1178	89	1354	121	1843
	54	75	1262	86	1451	116	1963
	60	72	1344	83	1545	111	2057
	66	70	1423	81	1636	106	2148
	72	68	1500	79	1724	102	2234
	78	67	1575	77	1811	98	2318
	83	65	1636	75	1881	95	2385
90.0	36	81	1081	93	1243	126	1691
	42	77	1180	89	1356	121	1845
	48	74	1274	85	1465	115	1977
	54	72	1365	82	1570	109	2082
	60	69	1454	80	1671	104	2182
	66	68	1539	78	1769	100	2278
	78	64	1704	74	1959	93	2458
100.0	36	78	1160	89	1333	122	1814
	42	74	1266	86	1455	116	1967
	48	72	1367	82	1571	109	2084
	54	69	1465	80	1684	104	2195
	60	67	1559	77	1793	99	2300
	66	65	1651	75	1898	95	2401
	74	63	1770	72	2035	90	2529
110.0	36	75	1236	87	1421	118	1932
	42	72	1349	83	1550	110	2063
	48	69	1457	80	1674	104	2186
	54	67	1561	77	1794	99	2302
	60	65	1662	75	1910	94	2413
	66	63	1760	73	2023	90	2518
	70	62	1823	71	2096	88	2586

PERMANENT MULLION SPAN SCHEDULE ⟨H⟩

NEGATIVE DESIGN LOAD (P.S.F.)	SLAT SPAN OR STORM BAR SPACING (IN.)	MULLION TYPE AND MAXIMUM LENGTH (INCHES)					
		(11) 2" x 3" HEAVY	(11) END REACTION (LBS.)	(8) & (11) 1" x 3" 2" x 3" HEAVY	(8) & (11) END REACTION (LBS.)	(12) 4" x 6"	(12) END REACTION (LBS.)
120.0	30	77	1185	88	1362	120	1853
	36	73	1310	84	1506	113	2018
	42	70	1429	81	1643	106	2155
	48	67	1544	78	1774	100	2283
	54	65	1654	75	1901	95	2404
	60	63	1761	73	2024	90	2520
	66	61	1865	71	2143	87	2630
130.0	24	80	1110	91	1276	124	1737
	30	75	1250	86	1437	117	1948
	36	71	1382	82	1588	108	2101
	42	68	1508	78	1733	102	2243
	48	66	1628	75	1872	96	2376
	54	63	1745	73	2006	91	2502
	61	61	1876	70	2156	86	2642
140.0	18	83	1010	96	1162	130	1580
	24	78	1167	89	1341	121	1825
	30	73	1313	84	1509	113	2022
	36	70	1452	80	1669	104	2180
	42	67	1584	77	1821	98	2327
	48	64	1711	74	1967	92	2466
	58	61	1913	70	2198	85	2681
150.0	18	81	1058	94	1216	127	1655
	24	76	1222	87	1404	119	1911
	30	71	1375	82	1580	109	2093
	36	68	1520	78	1747	101	2256
	42	65	1658	75	1906	95	2409
	48	63	1791	72	2059	89	2552
	56	60	1961	69	2254	83	2732
160.0	18	80	1105	92	1270	125	1728
	24	74	1275	85	1466	115	1978
	30	70	1435	80	1650	105	2161
	36	67	1587	76	1824	98	2330
	42	64	1731	73	1990	92	2488
	48	61	1870	70	2150	86	2636
	53	60	1982	68	2278	83	2753
170.0	18	78	1150	90	1322	122	1799
	24	73	1328	84	1526	112	2039
	30	69	1494	79	1718	102	2228
	36	65	1652	75	1899	95	2402
	42	62	1803	72	2072	89	2564
	48	60	1947	69	2238	84	2717
	50	59	1994	68	2292	82	2766
180.0	18	77	1195	88	1373	120	1869
	18	77	1195	88	1373	120	1869
	18	77	1195	88	1373	120	1869
	24	71	1379	82	1586	108	2098
	30	67	1553	77	1785	99	2293
	36	64	1716	74	1973	92	2472
	47	59	1998	68	2297	82	2770
200.0	18	74	1282	85	1473	115	1986
	18	74	1282	85	1473	115	1986
	18	74	1282	85	1473	115	1986
	24	69	1480	79	1701	103	2212
	30	65	1665	75	1914	94	2417
	36	62	1841	71	2116	87	2605
	42	59	2009	68	2309	82	2781
220.0	18	72	1366	82	1570	109	2083
	18	72	1366	82	1570	109	2083
	18	72	1366	82	1570	109	2083
	24	67	1577	77	1813	98	2320
	30	63	1775	72	2040	90	2534
	36	60	1962	69	2255	83	2733
	38	59	2023	68	2325	81	2795

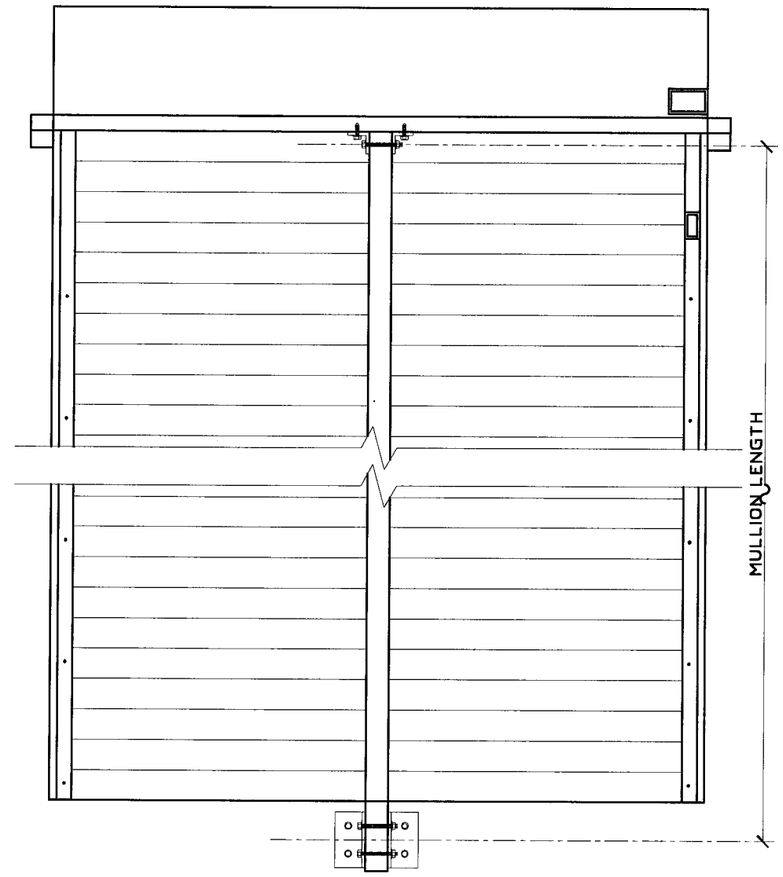

NOTE:

INTERPOLATE FOR MULLION SPANS & REACTIONS BETWEEN THOSE SHOWN ON THIS SHEET.

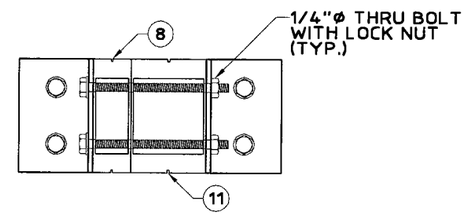

(8) & (11) MULLION CONNECTION

PRODUCT APPROVED as complying with the Florida Building Code Acceptance No. 06-1108-01 Expiration Date 01/01/2009 By M. Thiele Miami Dade Product Control Division

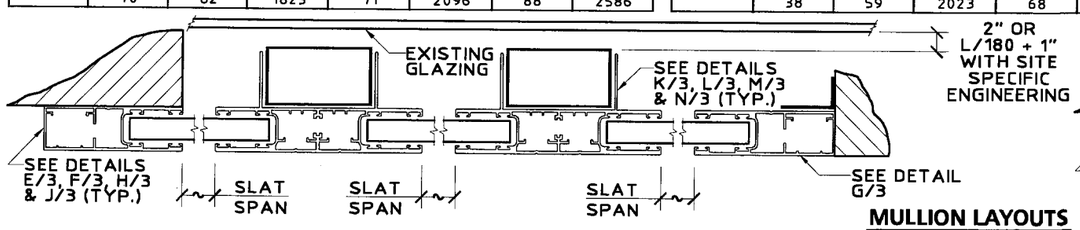

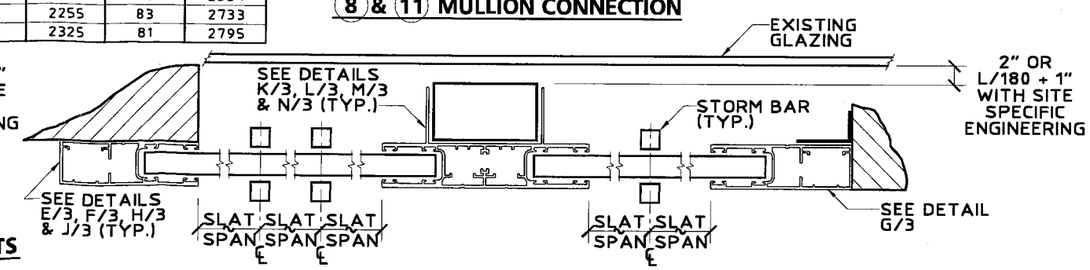

MULLION LAYOUTS

Thornton Tomasetti
330 N. Andrews Ave., Suite 450 • Ft. Lauderdale, FL 33301
T 954.522.3690 • F 954.522.3691 • COA # 7519
Website: www.ThorntonTomasetti.com

Copyright © 2006 Thornton-Tomasetti, Inc.
HI-ROLLER 50 LICENSED BY HI-TECH SHUTTER GROUP, INC.

HI-ROLLER 50 ROLL-UP SHUTTER

Manufacturers of Hurricane & Security Protection Products
HURST AWNING COMPANY, INC. "QUALITY SERVICE SINCE 1937"
6865 N.W. 36th Avenue
Miami, Florida 33147
Phone: (305) 635-0900
Toll Free: (800) 327-0905
Fax: (305) 634-9078

V.J. Knezevich
Professional Engineer
FL License No.: PE 0010983

SEP 30 2006

revisions			
no	date	by	description
0	04/10/2006	VJK	PREVIOUSLY DRAWING NO. 01-207

HTSG I.D. # 06093006360D

date 04/10/2006	
scale AS NOTED	drawn by MCR
design by VJK	checked by VJK
drawing no. 06-344	
sheet 10 of 13	

HEADER LENGTH OR SHUTTER WIDTH SCHEDULE ⟨J⟩

HEADER TYPE AND MAXIMUM LENGTH (INCHES)

NEGATIVE DESIGN LOAD (P.S.F.)	MAXIMUM SLAT SPAN USED (IN.)	(5) 2" x 3" STANDARD								(11) 2" x 3" HEAVY								(7) 2" x 5"								(9) 2" x 6"								(10) 2" x 8"							
		STORM BAR HEIGHT (IN.)								STORM BAR HEIGHT (IN.)								STORM BAR HEIGHT (IN.)								STORM BAR HEIGHT (IN.)								STORM BAR HEIGHT (IN.)							
		48	60	72	84	96	120	180	240	48	60	72	84	96	120	180	240	48	60	72	84	96	120	180	240	48	60	72	84	96	120	180	240	48	60	72	84	96	120	180	240
30.0	48	152	138	126	117	110	98	71	61	219	197	180	168	157	143	118	91	216	194	178	165	155	141	116	89	245	221	202	188	176	159	132	115	301	271	249	231	217	196	161	142
	60	154	138	126	104	97	87	71	61	219	197	180	169	159	143	104	91	216	194	180	167	157	141	103	89	245	221	202	188	178	160	117	102	301	271	249	231	217	196	163	142
	72	154	122	112	104	97	87	-	-	219	199	182	169	160	127	104	91	216	196	180	167	157	125	103	89	245	221	205	190	178	142	117	102	301	271	249	231	217	198	163	126
	84	136	122	112	104	97	87	-	-	221	199	162	151	141	127	104	91	218	196	181	148	139	125	103	89	248	223	205	190	159	142	117	102	301	271	251	234	220	198	145	126
	96	136	122	112	104	97	-	-	-	221	177	162	151	141	127	104	-	218	174	160	148	139	125	103	-	248	223	182	169	159	142	117	102	301	274	251	234	220	176	145	126
	108	136	122	112	-	-	-	-	-	197	177	162	151	141	127	-	-	194	174	160	148	139	125	-	-	248	198	182	169	159	142	117	-	304	274	251	208	196	176	145	126
	121	136	122	-	-	-	-	-	-	197	177	162	151	141	127	-	-	194	174	160	148	139	125	-	-	221	198	182	169	159	142	-	-	304	274	224	208	196	176	145	126
40.0	36	132	119	108	101	95	85	61	53	191	172	157	146	137	123	102	89	188	169	155	144	135	121	101	87	214	192	176	164	154	138	114	100	263	237	217	202	190	171	141	122
	48	134	120	110	101	84	75	61	53	191	172	157	146	138	124	91	79	188	169	155	144	136	122	89	77	214	192	176	164	154	140	115	89	263	237	217	202	190	171	142	124
	60	134	106	97	90	84	75	61	-	191	173	159	148	138	111	91	79	188	171	157	145	136	109	89	77	214	192	178	166	155	140	102	89	263	237	217	202	190	172	142	110
	72	119	106	97	90	84	75	-	-	193	173	160	131	123	111	91	79	190	171	157	129	121	109	89	77	216	195	178	166	138	124	102	89	263	237	217	204	192	172	126	110
	84	119	106	97	90	-	-	-	-	193	154	141	131	123	111	91	-	190	152	139	129	121	109	89	-	216	195	159	147	138	124	102	89	263	239	220	204	192	153	126	110
	96	119	106	97	-	-	-	-	-	172	154	141	131	123	111	-	-	169	152	139	129	121	109	-	-	216	173	159	147	138	124	102	-	266	239	220	182	171	153	126	110
	113	119	-	-	-	-	-	-	-	172	154	141	131	123	-	-	-	169	152	139	129	121	-	-	-	192	173	159	147	138	124	-	-	266	213	196	182	171	153	126	-
50.0	48	120	107	98	80	75	67	55	-	172	154	143	133	124	112	82	71	169	152	141	131	122	110	80	69	192	173	159	147	140	125	92	80	237	213	196	182	171	153	128	111
	54	120	95	87	80	75	67	55	-	172	156	143	133	124	99	82	71	169	153	141	131	122	98	80	69	192	173	160	149	140	125	92	80	237	213	196	182	171	155	128	99
	60	106	95	87	80	75	67	-	-	173	156	143	133	111	99	82	71	171	153	141	131	109	98	80	69	192	175	160	149	140	111	92	80	237	213	196	182	172	155	113	99
	66	106	95	87	80	75	67	-	-	173	156	127	118	111	99	82	71	171	153	141	116	109	98	80	69	195	175	160	149	124	111	92	80	237	213	198	184	172	155	113	99
	72	106	95	87	80	75	-	-	-	173	139	127	118	111	99	82	-	171	154	125	116	109	98	80	-	195	175	142	132	124	111	92	80	237	215	198	184	172	138	113	99
	78	106	95	87	80	-	-	-	-	174	139	127	118	111	99	82	-	171	136	125	116	109	98	80	-	195	155	142	132	124	111	92	80	237	215	198	184	153	138	113	99
	105	106	-	-	-	-	-	-	-	154	139	127	118	111	-	-	-	152	136	125	116	109	-	-	-	173	155	142	132	124	111	-	-	239	192	176	163	153	138	113	-
60.0	48	110	98	79	73	69	61	50	-	157	143	131	122	114	91	75	65	155	141	129	120	112	89	73	63	176	159	145	136	128	115	84	73	217	196	179	167	156	142	117	90
	54	110	87	79	73	69	61	-	-	159	143	131	122	101	91	75	65	157	141	129	120	99	89	73	63	176	160	147	136	128	102	84	73	217	196	179	167	158	142	104	90
	60	97	87	79	73	69	61	-	-	159	143	116	108	101	91	75	65	157	141	129	106	99	89	73	63	178	160	147	136	114	102	84	73	217	196	181	168	158	142	104	90
	66	97	87	79	73	69	-	-	-	159	127	116	108	101	91	75	-	157	141	114	106	99	89	73	-	178	160	130	121	114	102	84	73	217	198	181	168	158	126	104	90
	72	97	87	79	73	-	-	-	-	160	127	116	108	101	91	75	-	157	125	114	106	99	89	73	-	178	142	130	121	114	102	84	73	217	198	181	168	141	126	104	90
	78	97	87	79	-	-	-	-	-	141	127	116	108	101	91	-	-	139	125	114	106	99	89	-	-	178	142	130	121	114	102	84	-	220	198	181	150	141	126	104	90
	96	97	-	-	-	-	-	-	-	141	127	116	108	101	-	-	-	139	125	114	106	99	-	-	-	159	142	130	121	114	102	-	-	220	176	161	150	141	126	104	-
72.0	48	101	80	73	68	63	57	-	-	146	133	122	113	94	84	69	60	144	131	120	111	104	83	68	59	164	147	136	127	119	95	78	67	202	182	167	155	145	132	109	84
	54	90	80	73	68	63	57	-	-	148	133	122	100	94	84	69	60	145	131	120	98	92	83	68	59	164	149	136	127	105	95	78	67	202	182	167	156	147	132	96	84
	60	90	80	73	68	63	-	-	-	148	133	108	100	94	84	69	60	145	131	106	98	92	83	68	-	166	149	136	112	105	95	78	67	202	182	168	156	147	117	96	84
	66	90	80	73	68	-	-	-	-	148	118	108	100	94	84	69	-	145	116	106	98	92	83	68	-	166	149	121	112	105	95	78	67	202	184	168	156	131	117	96	84
	72	90	80	73	-	-	-	-	-	131	118	108	100	94	84	-	-	129	116	106	98	92	83	-	-	166	132	121	112	105	95	78	-	204	184	168	139	131	117	96	84
	78	90	80	-	-	-	-	-	-	131	118	108	100	94	84	-	-	129	116	106	98	92	83	-	-	147	132	121	112	105	95	-	-	204	184	150	139	131	117	96	84
	82	90	-	-	-	-	-	-	-	131	118	108	100	94	84	-	-	129	116	106	98	92	83	-	-	147	132	121	112	105	95	-	-	204	162	150	139	131	117	96	84
80.0	48	84	75	69	63	59	53	-	-	138	124	114	94	88	79	65	56	136	122	112	104	87	77	63	55	154	140	128	119	111	89	73	63	190	171	156	145	138	124	90	79
	54	84	75	69	63	59	-	-	-	138	124	101	94	88	79	65	56	136	122	99	92	87	77	63	55	155	140	128	105	99	89	73	63	190	171	158	147	138	124	90	79
	60	84	75	69	63	-	-	-	-	138	111	101	94	88	79	65	-	136	109	99	92	87	77	63	-	155	140	114	105	99	89	73	63	190	172	158	147	138	110	90	79
	66	84	75	69	-	-	-	-	-	123	111	101	94	88	79	-	-	121	109	99	92	87	77	-	-	155	124	114	105	99	89	73	-	192	172	158	131	122	110	90	79
	72	84	75	-	-	-	-	-	-	123	111	101	94	88	79	-	-	121	109	99	92	87	77	-	-	138	124	114	105	99	89	73	-	192	172	141	131	122	110	90	79
	78	84	-	-	-	-	-	-	-	123	111	101	94	88	79	-	-	121	109	99	92	87	-	-	-	138	124	114	105	99	89	-	-	192	153	141	131	122	110	90	79
	83	84	-	-	-	-	-	-	-	123	111	101	94	88	-	-	-	121	109	99	92	87	-	-	-	138	124	114	105	99	89	-	-	192	153	141	131	122	110	90	-
90.0	36	89	80	73	60	56	50	41	-	129	116	108	100	94	84	61	53	127	114	106	98	92	83	60	52	145	130	120	111	105	94	69	59	179	161	148	137	129	116	96	84
	42	89	71	65	60	56	50	-	-	129	118	108	100	94	75	61	53	127	116	106	98	92	73	60	52	145	130	121	112	105	83	69	59	179	161	148	137	129	117	96	74
	48	79	71	65	60	56	50	-	-	131	118	108	89	83	75	61	53	129	116	106	87	82	73	60	52	145	132	121	112	93	84	69	59	179	161	148	139	130	117	85	74
	54	79	71	65	60	56	-	-	-	131	104	96	89	83	75	61	-	129	116	94	87	82	73	60	-	147	132	107	100	93	84	69	59	179	163	149	139	130	104	85	74
	60	79	71	65	-	-	-	-	-	116	104	96	89	83	75	61	-	129	103	94	87	82	73	-	-	147	117	107	100	93	84	69	-	181	163	149	139	116	104	85	74
	66	79	71	-	-	-	-	-	-	116	104	96	89	83	75	-	-	114	103	94	87	82	73	-	-	130	117	107	100	93	84	69	-	181	163	149	123	116	104	85	74
	78	79	-	-	-	-	-	-	-	116	104	96	89	83	-	-	-	114	103	94	87	82	-	-	-	130	117	107	100	93	84	-	-	181	145	133	123	116	104	85	-
100.0	36	85	76	61	57	53	47	39	-	123	111	102	95	89	71	58	50	121	109	101	93	87	78	57	49	138	124	114	107	100	90	65	56	171	153	141	131	122	110	91	71
	42	85	67	61	57	53	47	-	-	124	112	102	95	79	71	58	50	122	110	101	93	77	69	57	49	138	125	115	107	100	80	65	56	171	153	141	131	124	111	81	71
	48	75	67	61	57	53	-	-	-	124	112	91	84	79	71	58	50	122	110	89	83	77	69	57	49	140	125	115	95	89	80	65	56	171	153	142	132	124	111	81	71
	54	75	67	61	57	-	-	-	-	124	99	91	84	79	71	58	-	122	98	89	83	77	69	57	-	140	125	102	95	89	80	65	56	171	155	142	132	124	99	81	71
	60	75	67	61	-	-	-	-	-	111	99	91	84	79	71	-	-	109	98	89	83	77	69	-	-	140	111	102	95	89	80	65	-	172	155	142	117	110	99	81	71
	66	75	67	-	-	-	-	-	-	111	99	91	84	79	71	-	-	109	98	89	83	77	69	-	-	124	111	102	95	89	80	-	-	172	155	126	117	110	99	81	71
	74	75	-	-	-	-	-	-	-	111	99	91	84	79	-	-	-	109	98	89	83	77	-	-	-	124	111	102	95	89	80	-	-	172	138	126	117	110	99	81	-
110.0	36	81	72	58	54	51	45	37	-	118	107	98	91	85	68	55	48	116	105	96	89	83	66	54	47	132	118	108	102	95	86	62	54	163	147	134	125	117	106	87	67
	42	72	64	58	54	51	45	-	-	119	107	98	81	76	68	55	48	117	105	96	79	74	66	54	47	132	120	110	102	95	76	62	54	163	147	134	126	118	106	78	67
	48	72	64	58	54	51	-	-	-	119	107	87	81	76	68	55	-	117	105	85	79	74	66	54	-	133	120	110	90	85	76	62	54	163	147	136	126	118	94	78	67
	54	72	64	58	54	-	-	-	-	106	95	87	81	76	68	55	-	117	93	85	79	74	66	-	-	133	106	97	90	85	76	62	-	163	148	136	126	105	94	78	67
	60	72	64	-	-	-	-	-	-	106	95	87	81	76	68	-	-	104	93	85	79	74	66	-	-	118	106	97	90	85	76	62	-	165	148	136	112	105	94	78	67
	66	72	-	-	-	-	-	-	-	106	95	87	81	76	68	-	-	104	93	85	79	74	66	-	-	118	106	97	90	85	76	-	-	165	131	121	112	105	94	78	67
	70	72	-	-	-	-	-	-	-	106	95	87	81	76	-	-	-	104	93	85	79	74	-	-	-	118	106	97	90	85	76	-	-	165	132	121	112	105	94	78	-

NOTE:

INTERPOLATE FOR HEADER SPANS AND REACTIONS BETWEEN THOSE SHOWN ON THIS SHEET. FOR HEADER REACTION DETERMINATION AND END CONNECTION DETAILS & ANCHORS, SEE SCHEDULE E.

Complying with the Florida Building Code
Acceptance No. 06-1108.01
Expiration Date 01/01/2009
By
Miami Dade Product Control Division

Thornton Tomasetti
330 N. Andrews Ave., Suite 450 • Ft. Lauderdale, FL 33301
T 954.522.3690 • F 954.522.3691 • COA # 7519
Website: www.ThorntonTomasetti.com

Copyright © 2006 Thornton-Tomasetti, Inc.
HI-ROLLER 50 LICENSED BY HI-TECH SHUTTER GROUP, INC.

HI-ROLLER 50 ROLL-UP SHUTTER

Manufacturers of Hurricane & Security Protection Products
6865 N.W. 36th Avenue
Miami, Florida 33147
Phone: (305) 635-0900
Toll Free: (800) 327-0905
Fax: (305) 634-9078
HURST AWNING COMPANY, INC. "QUALITY SERVICE SINCE 1957"

V.J. Knezevich
Professional Engineer
FL License No. PE0010983

SEP 30 2006

revisions

no	date	by	description
0	04/10/2006	VJK	PREVIOUSLY DRAWING NO. 01-207

HTSG I.D. # 06093006360D

date 04/10/2006
scale AS NOTED
drawn by MCR
design by VJK
checked by VJK
drawing no. 06-344
sheet 11 of 13

Print Information: P:\FL1\KA\CADD\Associations\Hi-Tech\HURST\06-344\RO-sub\06-sub\06-344-11.dwg MCantu 10/04/2006 12:21:06pm 09/30/06 11:28

Print Information: P:\FL1\KA\CADD\Associations\Hi-Tech\HURST\06-344\RO-sub\06-344-13.dwg MCantu 10/04/2006 12:21:19pm 09/30/06 11:28

SIDE RAIL (GUIDE) ANCHOR SCHEDULE

FASTENER MAXIMUM SPACING (INCHES) REQUIRED FOR VARIOUS DESIGN LOADS & SPANS

EXISTING STRUCTURE	ANCHOR TYPE (NOTE: HEAD STYLE MAY BE PHILLIPS, FLAT HEAD, HEX HEAD OR PAN HEAD (HEAD = 0.425"ø MIN.))	LOAD (W) P.S.F. MAX. (SEE NOTE 1)	MIN. 2" EDGE DISTANCE									MIN. 3" EDGE DISTANCE								
			SPANS UP TO 4' – 1" (SEE NOTE 1)			SPANS UP TO 6' – 2" (SEE NOTE 1)			SPANS UP TO 8' – 11" (SEE NOTE 1)			SPANS UP TO 4' – 1" (SEE NOTE 1)			SPANS UP TO 6' – 2" (SEE NOTE 1)			SPANS UP TO 8' – 11" (SEE NOTE 1)		
			CONNECTION TYPE (SEE NOTE 3)			CONNECTION TYPE (SEE NOTE 3)			CONNECTION TYPE (SEE NOTE 3)			CONNECTION TYPE (SEE NOTE 3)			CONNECTION TYPE (SEE NOTE 3)			CONNECTION TYPE (SEE NOTE 3)		
			C1	C2	C3	C1	C2	C3	C1	C2	C3	C1	C2	C3	C1	C2	C3	C1	C2	C3
CONCRETE	1/4"ø ITW BUILDEX TAPCON WITH 1-3/4" MIN. EMBEDMENT (MIN. 3,000 P.S.I. CONCRETE)	48.0	12	12	11	8	12	7	6	12	5	12	12	12	9	12	9	6	12	6
		62.0	10	12	8	6	12	5	4	7	4	11	12	10	7	12	6	5	8	4
		72.0	8	12	7	5	12	4	4	7	4	10	12	9	6	12	6	4	8	4
		92.0	7	12	6	4	7	4	3	7	4	7	12	7	5	8	4	3	8	4
		220.0		7	4		7	4		7	4	3	8	4		8	4		8	4
	1/4" ELCO TEXTRON HEX-FLANGE TAPCON/ HEX HEAD TAPCON W/ 1-3/4" EMBED (MIN. 3,320 P.S.I. CONCRETE)	48.0	12	12	11	8	12	7	5	12	5	12	12	12	10	12	9	7	12	6
		62.0	9	12	9	6	12	6	4	7	4	12	12	11	7	12	7	5	8	5
		72.0	8	12	7	5	12	5	3	7	4	10	12	9	6	12	6	4	8	5
		92.0	6	12	6	4	7	4		7	4	8	12	7	5	8	5	3	8	5
		220.0		7	4		7	4		7	4	3	8	5		8	5		8	5
	1/4"ø ELCO CRETE FLEX WITH 1-3/4" MIN. EMBEDMENT (MIN. 3,350 P.S.I. CONCRETE)	48.0	12	12	12	11	12	10	7	12	7	12	12	12	11	12	12	8	12	9
		62.0	12	12	12	8	12	8	6	9	5	12	12	12	9	12	10	6	12	7
		72.0	11	12	11	7	12	7	5	9	5	11	12	12	7	12	9	5	12	7
		92.0	9	12	8	5	9	5	4	9	5	9	12	10	6	12	7	4	12	7
		220.0	3	9	5		9	5		9	5	3	12	7		12	7		12	7
	1/4"ø ASHLEY QUICK-SET SCREW WITH 1-1/4" MIN. EMBEDMENT (MIN. 3,000 P.S.I. CONCRETE)	48.0	6	12	6	4	12	4		6		6	12	6	4	12	4		6	
		62.0	4	12	5	3	11	3		3		4	12	5	3	11	3		3	
		72.0	4	12	4		6			3		4	12	4		6			3	
		92.0	3	12	3		3			3		3	12	3		3			3	
		220.0		3			3			3			3			3			3	

SIDE RAIL (GUIDE) ANCHOR SCHEDULE

FASTENER MAXIMUM SPACING (INCHES) REQUIRED FOR VARIOUS DESIGN LOADS & SPANS

EXISTING STRUCTURE	ANCHOR TYPE (NOTE: HEAD STYLE MAY BE PHILLIPS, FLAT HEAD, HEX HEAD OR PAN HEAD (HEAD = 0.425"ø MIN.))	LOAD (W) P.S.F. MAX. (SEE NOTE 1)	MIN. 2" EDGE DISTANCE									MIN. 3" EDGE DISTANCE								
			SPANS UP TO 4' – 1" (SEE NOTE 1)			SPANS UP TO 6' – 2" (SEE NOTE 1)			SPANS UP TO 8' – 11" (SEE NOTE 1)			SPANS UP TO 4' – 1" (SEE NOTE 1)			SPANS UP TO 6' – 2" (SEE NOTE 1)			SPANS UP TO 8' – 11" (SEE NOTE 1)		
			CONNECTION TYPE (SEE NOTE 3)			CONNECTION TYPE (SEE NOTE 3)			CONNECTION TYPE (SEE NOTE 3)			CONNECTION TYPE (SEE NOTE 3)			CONNECTION TYPE (SEE NOTE 3)			CONNECTION TYPE (SEE NOTE 3)		
			C1	C2	C3	C1	C2	C3	C1	C2	C3	C1	C2	C3	C1	C2	C3	C1	C2	C3
HOLLOW CONCRETE BLOCK	1/4"ø ITW BUILDEX TAPCON WITH 1-1/4" MIN. EMBEDMENT	48.0	4	12	4		11			4		6	12	5	4	12	3	3	5	
		62.0	3	12	3		8					5	12	4	3	9				
		72.0		11	3		4					4	12	3		4				
		92.0		8								3	10							
		220.0																		
	1/4" ELCO TEXTRON HEX-FLANGE TAPCON/ HEX HEAD TAPCON W/ 1-1/4" EMBED	48.0	5	12	6	3	12	3		6		7	12	7	4	12	4	3	7	3
		62.0	4	12	4		10	3		3		5	12	5	3	12	3		4	
		72.0	3	12	4		5			3		4	12	5	3	6	3		4	
		92.0		11	3		3			3		3	12	3		4			4	
		220.0		3			3			3			4			4			4	
	1/4"ø ELCO CRETE FLEX WITH 1-1/4" MIN. EMBEDMENT	48.0	9	12	9	6	12	6	4	10	4	12	12	9	11	12	6	8	10	4
		62.0	7	12	7	4	12	4	3	5	3	12	12	7	9	12	4	6	5	3
		72.0	6	12	6	4	9	4		5	3	11	12	6	7	9	4	5	5	3
		92.0	4	12	4	3	5	3		5	3	9	12	5	6	5	3	4	5	3
		220.0		5	3		5	3		5	3	3	5	3		5	3		5	3
	1/4"ø ASHLEY QUICK-SET SCREW WITH 1-1/4" MIN. EMBEDMENT	48.0	6	12	6	4	12	4		6		6	12	6	4	12	4		6	
		62.0	4	12	5	3	11	3		3		4	12	5	3	11	3		3	
		72.0	4	12	4		6			3		4	12	4		6			3	
		92.0	3	12	3		3			3		3	12	3		3			3	
		220.0		3			3			3			3			3			3	

ANCHOR NOTES:

1. **SPANS AND LOADS SHOWN HERE ARE FOR DETERMINING ANCHOR SPACING ONLY. ALLOWABLE ROLL-UP SHUTTER SPANS FOR SPECIFIC LOADS MUST BE LIMITED TO THOSE SHOWN IN SCHEDULES B-1, B-2, & B-3, SHEET 5.**
2. ENTER ANCHOR SCHEDULE BASED ON THE EXISTING STRUCTURE MATERIAL, ANCHOR TYPE AND EDGE DISTANCE. SELECT DESIGN LOAD GREATER THAN OR EQUAL TO NEGATIVE DESIGN LOAD ON SHUTTER AND SELECT SPAN GREATER THAN OR EQUAL TO SLAT SPAN.
3. SEE MOUNTING SECTION DETAILS FOR IDENTIFICATION OF CONNECTION TYPE.
4. EXISTING STRUCTURE MAY BE CONCRETE, HOLLOW BLOCK OR WOOD FRAMING. REFERENCE ANCHOR SCHEDULE FOR PROPER ANCHOR TYPE BASED ON TYPE OF EXISTING STRUCTURE.
5. ANCHORS SHALL BE INSTALLED IN ACCORDANCE WITH MANUFACTURERS' RECOMMENDATIONS.
6. MINIMUM EMBEDMENT AND EDGE DISTANCE EXCLUDES WALL FINISH OR STUCCO.
7. WHERE EXISTING STRUCTURE IS WOOD FRAMING, WOOD FRAMING CONDITIONS VARY. FIELD VERIFY THAT FASTENERS ARE INTO ADEQUATE WOOD FRAMING MEMBERS, NOT PLYWOOD.
8. WHERE LAG SCREWS FASTEN TO NARROW FACE OF STUD FRAMING, FASTENER SHALL BE LOCATED IN CENTER OF NOMINAL 2" x 4" (MIN.) WOOD STUD. 3/4" EDGE DISTANCE IS ACCEPTABLE FOR WOOD FRAMING. WOOD STUD SHALL BE "SOUTHERN PINE" G=0.55 OR GREATER DENSITY. LAG SCREWS SHALL HAVE PHILLIPS PAN HEAD OR HEX HEAD.
9. DESIGNATES ANCHOR CONDITIONS WHICH ARE NOT ACCEPTABLE USES.

SIDE RAIL (GUIDE) ANCHOR SCHEDULE

FASTENER MAX. SPACING (IN.) REQ'D FOR VARIOUS DESIGN LOADS & SPANS

EXISTING STRUCTURE	ANCHOR TYPE (NOTE: HEAD STYLE MAY BE PHILLIPS, FLAT HEAD, HEX HEAD OR PAN HEAD (HEAD = 0.425"ø MIN.))	LOAD (W) P.S.F. MAX. (SEE NOTE 1)	MIN. 3/4" EDGE DISTANCE								
			SPANS UP TO 4' – 1" (SEE NOTE 1)			SPANS UP TO 6' – 2" (SEE NOTE 1)			SPANS UP TO 8' – 11" (SEE NOTE 1)		
			CONNECTION TYPE (SEE NOTE 3)			CONNECTION TYPE (SEE NOTE 3)			CONNECTION TYPE (SEE NOTE 3)		
			C1	C2	C3	C1	C2	C3	C1	C2	C3
WOOD	1/4"ø x MIN. 2-1/2" LONG LAG SCREW W/ MIN. 1-3/4" EMBEDMENT SHEAR PARALLEL OR PERPENDICULAR TO WOOD GRAIN	48.0	12	12	11	11	12	7	8	12	4
		62.0	12	12	8	9	12	5	6	10	3
		72.0	11	12	7	7	12	4	5	10	3
		92.0	9	12	5	6	10	3	4	10	3
		220.0	3	10	3		10	3		10	3

PRODUCT REVISED as complying with the Florida Building Code Acceptance No. 06-1108.04 Expiration Date 01/01/2009
By Miami Dade Product Control Division

Thornton Tomasetti
330 N. Andrews Ave., Suite 450 • Ft. Lauderdale, FL 33301
T 954.522.3690 • F 954.522.3691 • COA # 7819
Website: www.ThorntonTomasetti.com

Copyright © 2006 Thornton-Tomasetti, Inc.

HI-ROLLER 50 LICENSED BY HI-TECH SHUTTER GROUP, INC.

HI-ROLLER 50 ROLL-UP SHUTTER

Manufacturers of Hurricane & Security Protection Products
HURST AWNING COMPANY, INC. "QUALITY SERVICE SINCE 1957"
6865 N.W. 36th Avenue
Miami, Florida 33147
Phone: (305) 635-0900
Toll Free: (800) 327-0905
Fax: (305) 634-9078

V.J. Knezevich
Professional Engineer
FL License No.: PE-0010983

SEP 30 2006

revisions			
no	date	by	description
0	04/10/2006	VJK	PREVIOUSLY DRAWING NO. 01-207

HTSG I.D. # 06093006360D

date 04/10/2006	
scale AS NOTED	drawn by MCR
design by VJK	checked by VJK
drawing no. 06-344	
sheet 13 of 13	