MIAMI-DADE COUNTY
BUILDING CODE COMPLIANCE OFFICE (BCCO)
PRODUCT CONTROL DIVISION

MIAMI-DADE COUNTY, FLORIDA
METRO-DADE FLAGLER BUILDING
140 WEST FLAGLER STREET, SUITE 1603
MIAMI, FLORIDA 33130-1563
(305) 375-2901 FAX (305) 375-2908
www.miamidade.gov

NOTICE OF ACCEPTANCE (NOA)

Shutter Enterprises Group, Inc.
4201 N.E. 12th Terr.
Oakland Park, FL 33334

SCOPE:

This NOA is being issued under the applicable rules and regulations governing the use of construction materials. The documentation submitted has been reviewed by Miami-Dade County Product Control Division and accepted by the Board of Rules and Appeals (BORA) to be used in Miami Dade County and other areas where allowed by the Authority Having Jurisdiction (AHJ).

This NOA shall not be valid after the expiration date stated below. The Miami-Dade County Product Control Division (In Miami Dade County) and/or the AHJ (in areas other than Miami Dade County) reserve the right to have this product or material tested for quality assurance purposes. If this product or material fails to perform in the accepted manner, the manufacturer will incur the expense of such testing and the AHJ may immediately revoke, modify, or suspend the use of such product or material within their jurisdiction. BORA reserves the right to revoke this acceptance, if it is determined by Miami-Dade County Product Control Division that this product or material fails to meet the requirements of the applicable building code.

This product is approved as described herein, and has been designed to comply with the Florida Building Code including the High Velocity Hurricane Zone.

DESCRIPTION: " Bernardo " Extruded Aluminum Accordion Shutter System

APPROVAL DOCUMENT: Drawing No. 95-100, titled " Bernardo Accordion ", sheets 1 through 11 of 11, prepared by Shutter Enterprises Group, Inc., dated December 13, 2006, signed and sealed by Donald L. Fowler, P.E. bearing the Miami-Dade County Product Control Revision stamp with the Notice of Acceptance number and expiration date by the Miami-Dade County Product Control Division.

MISSILE IMPACT RATING: Large and Small Missile Impact

LABELING: Each unit shall bear a permanent label with the manufacturer's name or logo, city, state and the following statement: "Miami-Dade County Product Control Approved", unless otherwise noted herein.

RENEWAL of this NOA shall be considered after a renewal application has been filed and there has been no change in the applicable building code negatively affecting the performance of this product.

TERMINATION of this NOA will occur after the expiration date or if there has been a revision or change in the materials, use, and/or manufacture of the product or process. Misuse of this NOA as an endorsement of any product, for sales, advertising or any other purposes shall automatically terminate this NOA. Failure to comply with any section of this NOA shall be cause for termination and removal of NOA.

ADVERTISEMENT: The NOA number preceded by the words Miami-Dade County, Florida, and followed by the expiration date may be displayed in advertising literature. If any portion of the NOA is displayed, then it shall be done in its entirety.

INSPECTION: A copy of this entire NOA shall be provided to the user by the manufacturer or its distributors and shall be available for inspection at the job site at the request of the Building Official.

This NOA **renews** and **revises NOA #02-0426.05** and consists of this page 1, evidence submitted pages E-1 & E-2, as well as approval document mentioned above.

The submitted documentation was reviewed by Jaime D. Gascon, P.E.

PRODUCT CONTROL ACCEPTED

J Gascon
1/10/07

NOA No 06-1108.02
Expiration Date:02/01/2008
Approval Date:02/01/2007
Page 1

Shutter Enterprises Group, Inc.

NOTICE OF ACCEPTANCE: EVIDENCE SUBMITTED

A. DRAWINGS

1. Drawing No. 05-100, prepared by Shutter Enterprises Group, Inc., titled "Bernardo Accordion", dated December 13, 2006, sheets 1 through 11 of 11, signed and sealed by Donald L. Fowler, P.E. on December 16, 2006.

B. TESTS *(Submitted in file 02-0426.05)*

1. Test report on Large Missile Impact Test, Cyclic Wind Pressure Test and Uniform Static Air Pressure Test of 105", 112" and 113.5" span accordion shutter prepared by American Test Lab of South Florida, Report No ATL 0110.01-95, dated 01/14/95, signed and sealed by J. D. Mitrani, P.E.
2. Test report on Large Missile Impact Test, Cyclic Wind Pressure Test and Uniform Static Air Pressure Test of 36", 72", 113.5" and 144 span accordion shutter, prepared by American Test Lab of South Florida, Report No. ATL 0413.01-95, dated 05/13/95, signed and sealed by J. D. Mitrani, P.E.
3. Test report on Large Missile Impact Test and Cyclic Wind Pressure Test of 69-1/4", 60-3/4" and 70-1/8" span accordion shutter, prepared by American Test Lab of South Florida, Report No. ATL 1215.01-95, dated 12/15/95, signed and sealed by J. D. Mitrani, P.E.

C. CALCULATIONS

1. Comparative analysis and anchor calculations dated 04/17/95, pages 1 to 21 of 21, prepared by Jenkins & Charland, Inc., signed and sealed by G. S. Sanders, P.E. ***(Submitted in file 02-0426.05).***
2. Comparative analysis and anchor calculations dated 06/17/96, pages 1 through 29 of 29 prepared by Jenkins & Charland, Inc., signed and sealed by G. S. Sanders, P.E. ***(Submitted in file 02-0426.05).***
3. Comparative analysis and anchor calculations dated 11/06/96, pages 1 through 37 of 37 prepared by Jenkins & Charland, Inc., signed and sealed by G. S. Sanders P.E. ***(Submitted in file 02-0426.05).***
4. Comparative analysis calculations dated September 4, 2001, signed and sealed by G. S. Sanders, P.E. ***(Submitted in file 02-0426.05).***
5. Anchor calculations removing the 4/3 stress increase, dated January 9, 2007 , pages 1 through 9, signed and sealed by Donald L. Fowler, P.E.
6. Comparative analysis calculations dated January 9, 2007, signed and sealed by Donald L. Fowler, P.E.

D. QUALITY ASSURANCE

1. By Miami-Dade County Building Code Compliance Office.

E. MATERIAL CERTIFICATIONS

1. None.

Jaime D. Gascon, P. E.
Chief, Product Control Division
NOA No 06-1108.02
Expiration Date:02/01/2008
Approval Date: 02/01/2007

Shutter Enterprises Group, Inc.

NOTICE OF ACCEPTANCE: EVIDENCE SUBMITTED

F. STATEMENTS

1. Letter from Donald L. Fowler, P.E., dated September 13, 2005, certifying that the drawing (No. 95-100) prepared for Shutter Enterprises Group, Inc., signed and sealed by Donald L. Fowler, P.E., conforms to the 2004 F.B.C.
2. Bill of Sale, Assignment and Assumption Agreement between Shutter Enterprises Group, Inc.(Grantee) and Bernardo Shutter Corporation (Grantor)transferring all assets of NOA 98-0911.03 (revised by 01-0709.08 and then by 02-0426.05), dated April 21, 1999, signed by Lee Bernardo, Bernardo Shutter Corporation, and John Coffil, Shutter Enterprises Group, Inc.

Jaime D. Gascon, P. E.
Chief, Product Control Division
NOA No 06-1108.02
Expiration Date:02/01/2008
Approval Date: 02/01/2007

SHUTTER ENTERPRISES GROUP INC.

POMPANO BEACH, FLORIDA 33060

ACCORDION SHUTTER

SHUTTER ENTERPRISES GROUP INC.
4201 NE 12TH TERRACE
OAKLAND PARK, FL 33334
COPYRIGHT © 2005

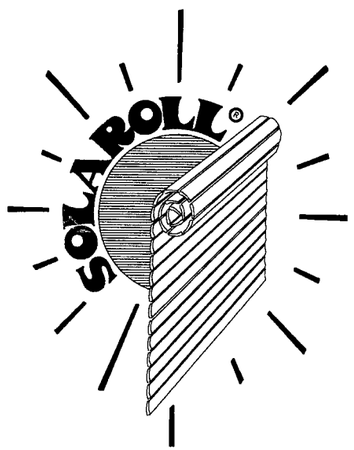

PRODUCT MARKING

A LABEL SHALL BE PLACED ON THE FEMALE CENTER LOCK ABOVE THE LOCK ASSEMBLY, WITH THE FOLLOWING STATEMENT:

SHUTTER ENTERPRISES GROUP INC., OAKLAND PARK, FL.
MIAMI-DADE COUNTY PRODUCT CONTROL APPROVED

GENERAL NOTES

1.0 SHUTTER SYSTEM WAS DESIGNED TO MEET THE REQUIREMENTS OF THE PREVIOUS CODES, AND HAS BEEN REEVALUATED AND DOES MEET THE 2004 FLORIDA BUILDING CODE. NO ADDITIONAL 1/3 ALLOWABLE STRESS INCREASE WAS USED. PRODUCT FOR USE INSIDE THE H.V.H.Z.

1.1 DESIGN WIND PRESSURES SHALL BE DERIVED USING THE AMERICAN SOCIETY OF CIVIL ENGINEERS STANDARD ASCE 7-02, AND FLORIDA BUILDING CODE 2004.

2.0 ALUMINUM COMPONENTS ARE DESIGNED IN ACCORDANCE WITH THE "ALUMINUM CONSTRUCTION MANUAL".

3.0 THE ALUMINUM ALLOYS USED TO DERIVE THESE DESIGN CHARTS ARE AS SHOWN IN THE DRAWINGS.

4.0 STEEL SURFACES IN CONTACT WITH ALUMINUM COMPONENTS SHALL BE GALVANIZED OR HAVE ONE COAT OF ZINC CHROMATE PRIMER IN ACCORDANCE WITH FEDERAL SPEC TTP-645.

5.0 THE EMBEDMENT FOR ANCHORS SHOWN IN THESE DRAWINGS IS THE REQUIRED MINIMUM PENETRATION INTO THE BASE MATERIAL OF THE SUPPORTING STRUCTURE. MINIMUM EDGE DISTANCE (3 1/2") SHOWN IN THESE DRAWINGS INCLUDE A 1/2" (MAX.) ALLOWANCE FOR STUCCO.

6.0 BOLTS, NUTS AND WASHERS SHALL BE STAINLESS STEEL OR ALUMINUM ALLOY 2024-T4 OR 7075-T6 OR PLATED STEEL.

7.0 DEFLECTION DESIGN CRITERIA.

7.1 MULLIONS HAVE BEEN SIZED TO LIMIT THE DEFLECTION OF THE ELEMENTS TO $\leq$ L/180 AT THE DESIGN LOAD.

7.2 BLADES HAVE BEEN SIZED TO LIMIT THE DEFLECTION AT THE DESIGN LOAD TO BE $\leq$ L/30 FOR SUCTION AND THE LESSER OF L/30 OR 2 INCHES WHEN SUBJECTED TO POSITIVE PRESSURE.

7.3 ACCORDION SHALL BE CONFIGURED TO HAVE NO LESS THAN THE MINIMUM CLEARANCE SHOWN IN THE DESIGN CURVES BETWEEN THE UNLOADED BLADE AND GLAZING. THE MINIMUM CLEARANCE IS THE BLADE DEFLECTION PLUS 1 INCH.

8.0 ALTERATIONS OR ADDITIONS TO THIS DRAWING ARE NOT PERMITTED. DOCUMENT SHALL BEAR THE ORIGINAL SIGNATURE, SEAL, AND DATE OF THE PROFESSIONAL ENGINEER LISTED.

9.0 THIS PRODUCT APPROVAL IS SUITABLE FOR USE ONLY AS SPECIFICALLY STATED ON THE COMBINED PAGES OF THE ENTIRE DOCUMENT. ANY DEVIATIONS SHALL BE REVIEWED AND APPROVED SEPARATELY BY MIAMI-DADE COUNTY PRODUCT CONTROL DIVISION.

TABLE OF CONTENTS

PAGE NO.	DESCRIPTION
1	GENERAL NOTES, TABLE OF CONTENTS
2	PLAN, SECTION, ELEVATION
3	COMPONENTS
4	4" ACCORDION BLADE
5	TRACK MOUNTING CONNECTIONS 1-2
6	TRACK MOUNTING CONNECTIONS 1A-2A
7	TRACK MOUNTING CONNECTIONS 3-4
8	TRACK MOUNTING CONNECTIONS 5-6
9	REMOVABLE TRACK 7
10	CORNER POST OPTIONS & END BLADE FASTENING
11	LOCK ASSEMBLY

PRODUCT REVISED
as complying with the Florida Building Code
Acceptance No 06-1108.02
Expiration Date FEBRUARY 1, 2008
By
Miami Dade Product Control Division

DRAWING TITLE:
NOTICE OF ACCEPTANCE
BERNARDO ACCORDION
PRODUCT APPROVAL

D.L. Fowler
Professional Engineer
Florida License No.
PE0050458

12-16-06

DRAWN:	WTW
DATE:	12-13-06
APPROVED:	
DATE:	
DRAWING NO:	95-100
SIZE: B	REV: E
SCALE:	NA
SHEET:	1 OF 11

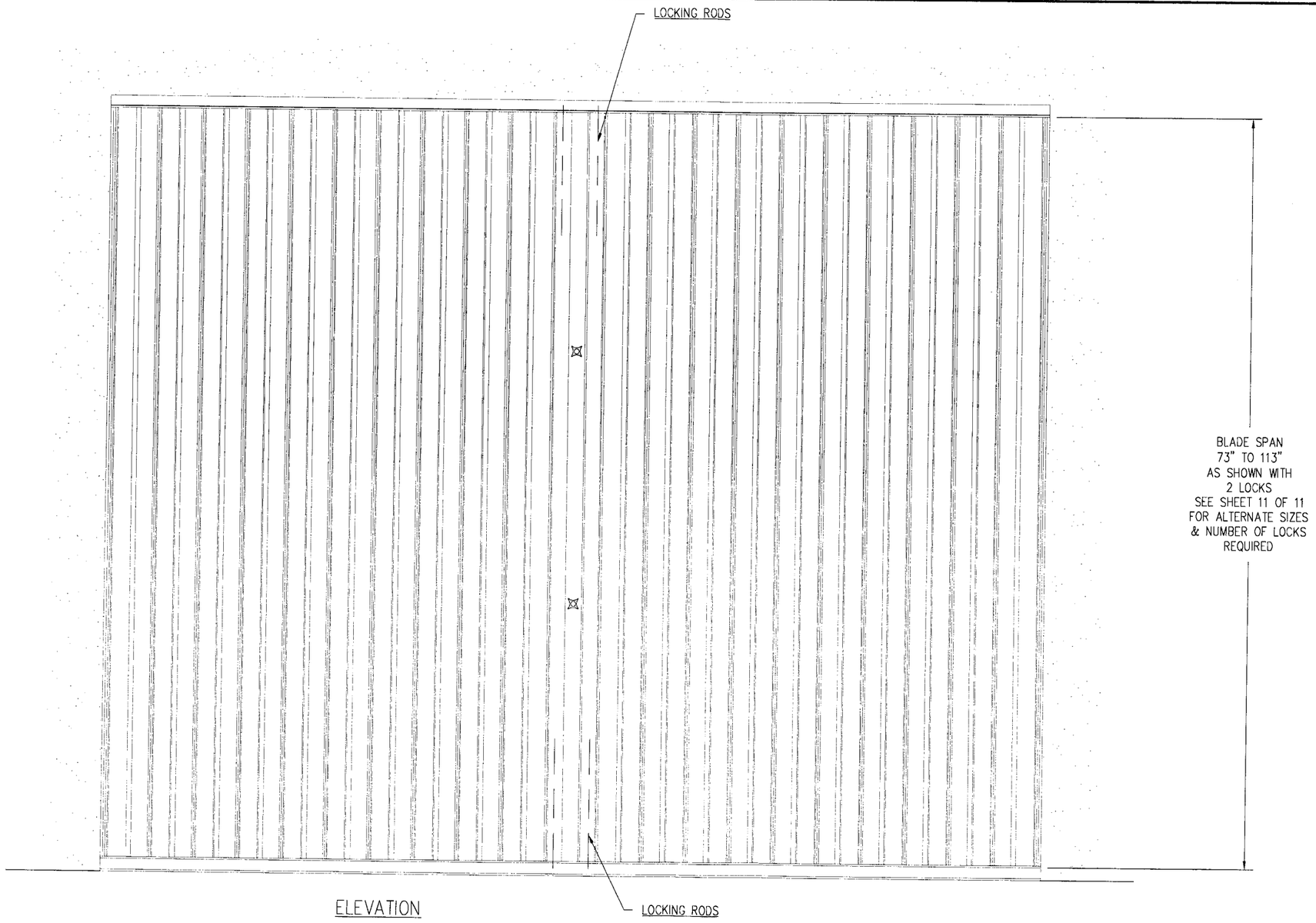

ELEVATION

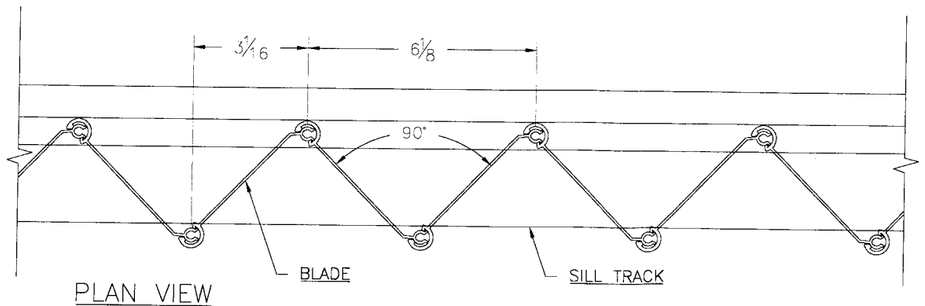

PLAN VIEW

PRODUCT REVISED
as complying with the Florida
Building Code
Acceptance No 06-1108.02
Expiration Date FEBRUARY 1, 2008
By
Miami Dade Product Control
Division

SHUTTER ENTERPRISES GROUP INC.

4201 NE 12TH TERRACE
OAKLAND PARK, FL 33334
COPYRIGHT © 2005

DRAWING TITLE:

NOTICE OF ACCEPTANCE
BERNARDO ACCORDION
PRODUCT APPROVAL

D.L. Fowler
Professional Engineer
Florida License No.
PE0050458

12-16-06

DRAWN:	WHW
DATE:	12-13-06
APPROVED:	
DATE:	
DRAWING NO:	95-100
SIZE: B	REV: E
SCALE:	NA
SHEET:	2 OF 11

COMPONENTS

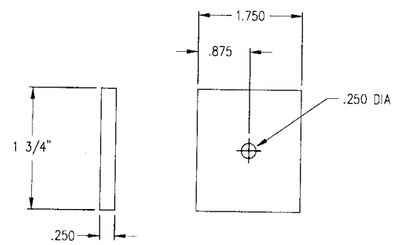

REINFORCING CLEAT
ALUM. 1 3/4" WIDE 1/4" THK.
ALLOY- 6061-T6

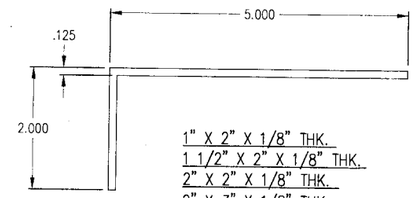

1" X 2" X 1/8" THK.
1 1/2" X 2" X 1/8" THK.
2" X 2" X 1/8" THK.
2" X 3" X 1/8" THK.
2" X 4" X 1/8" THK.
2" X 5"X 1/8" THK.

ALUMINUM ANGLE
ALLOY-6063-T5

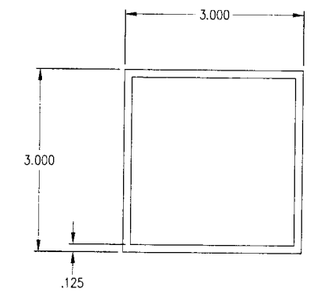

2" X 2" X 1/8" THK.
2" X 3" X 1/8" THK.
2" X 4" X 1/8" THK.
3" X 3" X 1/8" THK.
3" X 4" X 1/8" THK.

ALUMINUM TUBE
ALLOY-6063-T5

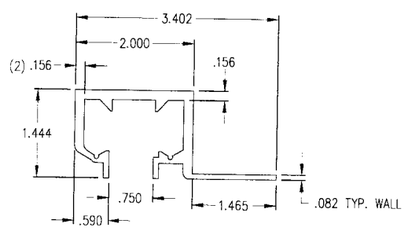

4" BLADE REGULAR TRACK
ALLOY-6063-T5

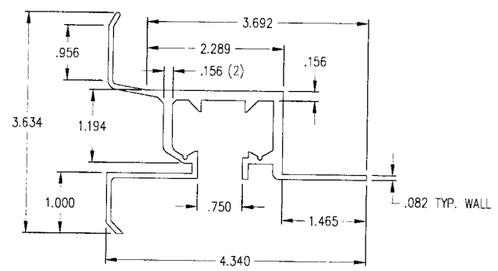

4" BLADE WALL MOUNT HEADER
ALLOY-6063-T5

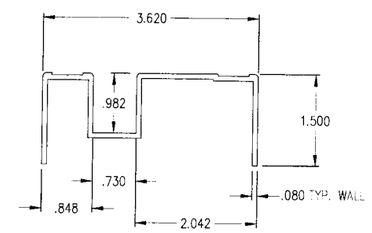

SILL TRACK
ALLOY-6063-T5

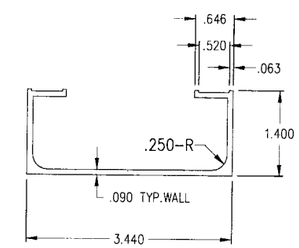

LEVELING CHANNEL
ALLOY-6063-T6

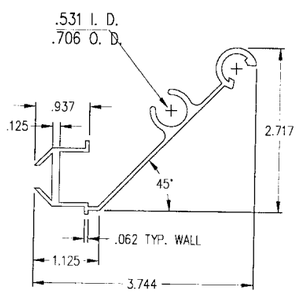

MALE CENTER LOCK
ALLOY-6063-T6

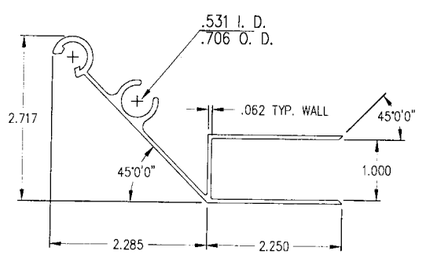

FEMALE CENTER LOCK
ALLOY-6063-T6

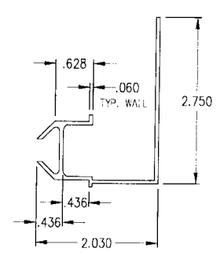

MALE SIDE LOCK
ALLOY-6063-T5

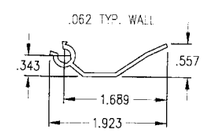

END SLAT
ALLOY-6063-T5

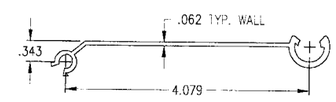

4" ACCORDION BLADE
ALLOY-6063-T6

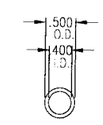

LOCK PIN
LENGTH VARIES
ALLOY-6063-T5

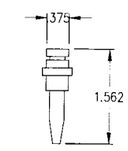

LOCK PIN INSERT
ALLOY-6063-T5

PRODUCT REVISED
as complying with the Florida
Building Code
Acceptance No 06-1108.02
Expiration Date February 4, 2008
By
Miami Dade Product Control
Division

SHUTTER ENTERPRISES GROUP INC.
4201 NE 12TH TERRACE
OAKLAND PARK, FL 33334
COPYRIGHT © 2005

DRAWING TITLE:
NOTICE OF ACCEPTANCE
BERNARDO ACCORDION
PRODUCT APPROVAL

D.L. Fowler
Professional Engineer
Florida License No.
PE0050458
12-16-06

DRAWN:	WHW
DATE:	12-13-06
APPROVED:	
DATE:	
DRAWING NO:	95-100
SIZE: B	REV: E
SCALE:	NA
SHEET:	3 OF 11

4" ACCORDION BLADE

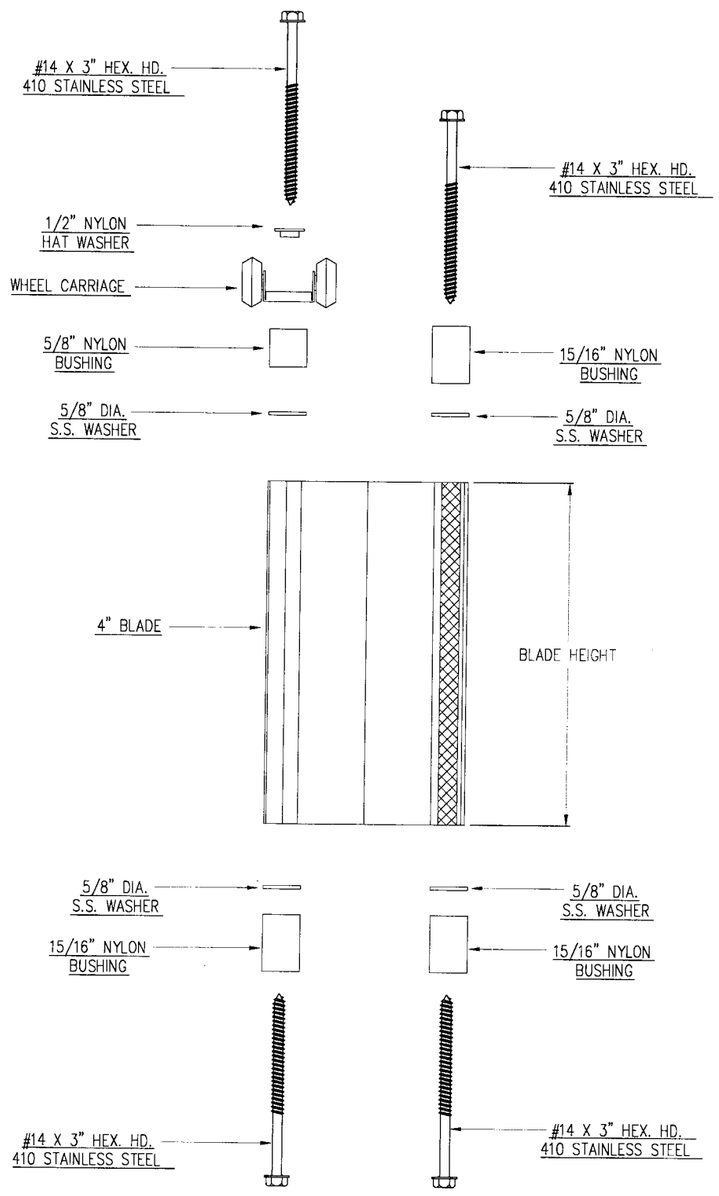

BLADE HEIGHT **	DESIGN LOAD LIMIT (PSF)
0 – 72"	±240
73" – 97"	±180
98" – 113"	±136
114" – 129"	±100
130" – 144"	±84

0 –30' ELEVATION MINIMUM CLEARANCE TO GLASS IS 3 1/2"
ABOVE 30' REFER TO GRAPH BELOW

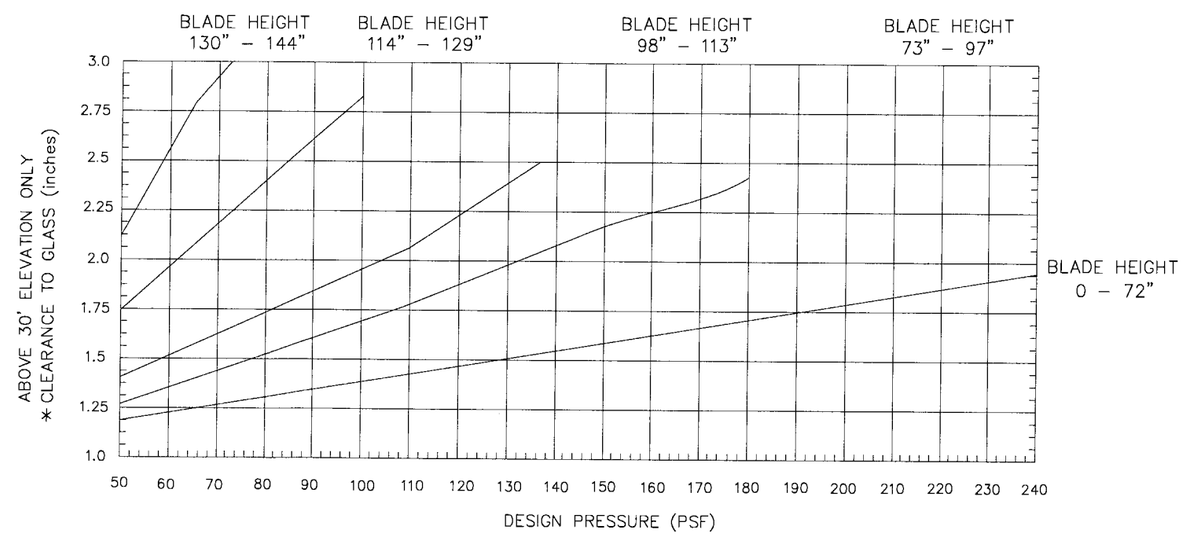

NOTE:

* CLEARANCE TO GLASS (inches)
INCLUDES THE 1" MINIMUM DISTANCE REQUIRED AT DESIGN LOAD.

** LINEAR INTERPOLATION OF ALLOWABLE SPANS BETWEEN 84 PSF AND 240 PSF IS ACCECPTABLE.

PRODUCT REVISED
as complying with the Florida Buiding Code
Acceptance No. 06-1108.02
Expiration Date FEBRUARY 1, 2008
By
Miami Dade Product Control Division

SHUTTER ENTERPRISES GROUP INC.
4201 NE 12TH TERRACE
OAKLAND PARK, FL 33334
COPYRIGHT © 2005

DRAWING TITLE:
NOTICE OF ACCEPTANCE
BERNARDO ACCORDION
PRODUCT APPROVAL

D.L. Fowler
Professional Engineer
Florida License No.
PE0050458
12-16-06

DRAWN:	WHW
DATE:	12-13-06
APPROVED:	
DATE:	
DRAWING NO:	95-100
SIZE: B	REV: E
SCALE:	NA
SHEET:	4 OF 11

TRACK MOUNTING CONNECTIONS

1 ANGLE BUILD-OUT HEADER

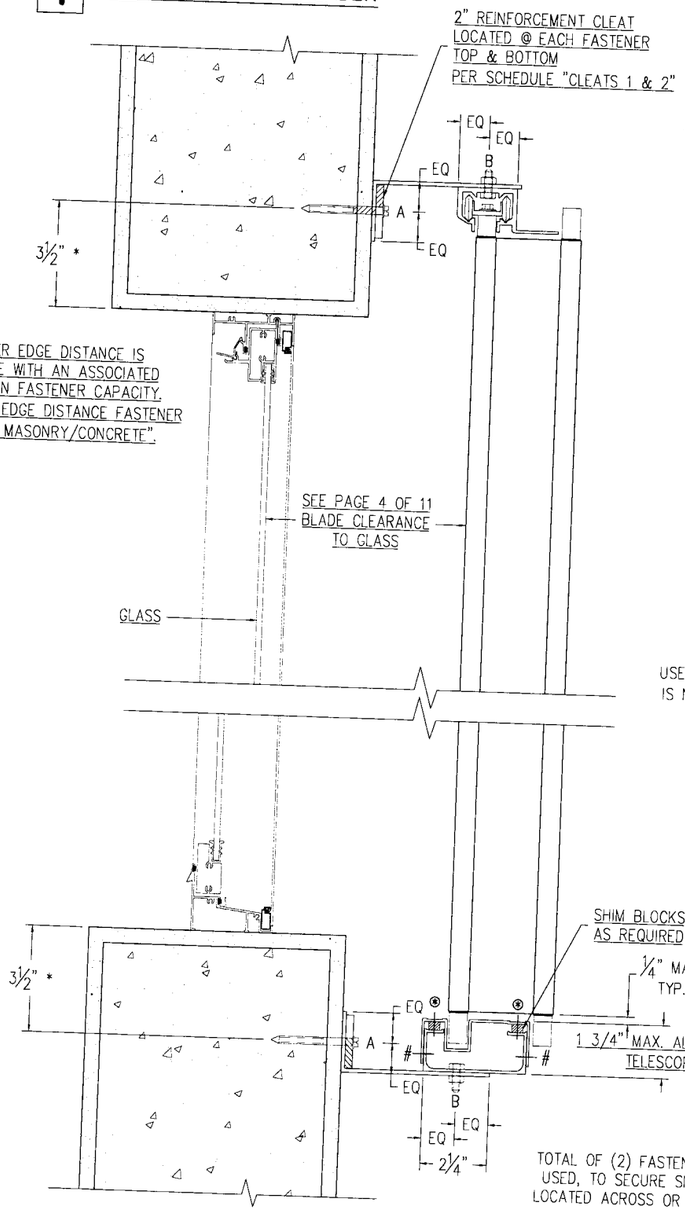

TOTAL OF (2) FASTENERS OF EITHER TYPE CAN BE USED, TO SECURE SILL CAP. FASTENING MUST BE LOCATED ACROSS OR DIAGONAL FROM EACH OTHER.

FASTENERS:

AD-66-ABC POP RIVET (16" O.C.)

⊛ #10 X 1" S.S.TRUSS HEAD (16" O.C.)

2 ANGLE BUILD-OUT SILL

APPROVED FASTENERS

FASTENER "A"

MANUF.	TYPE	DIA.	IMBED.
RAWL	TAPPER	.25	1.75
RAWL	CALK-IN	.25	.875
ELCO	TAPCON	.25	1.75
WOOD	S.S. SCR	#14	2"

FASTENER "B"

MANUF.	TYPE	DIA.	HEIGHT
BOLT & NUT	18-8 S.S. STEEL	1/4-20	.75

CLEAT 1 & 2 **

USE CHART TO DETERMINE IF 1/4" IS NEEDED ELSE USE 1/8" ANGLE PER PAGE 3 OF 11.

BLADE SPAN		PSF
>114"	OR	>70
>97"	AND	>50
>60"	AND	>75

** NO CLEATS ARE REQUIRED AT ANY HEIGHT OR PSF IF 1/4" THICK 6063-T5 ANGLES SIZED PER PAGE 3 OF 11 ARE USED. NO CLEATS REQUIRED ON REDUCED EDGE DISTANCE FASTENER SPACINGS.

FASTENER SPACING IN MASONRY/CONCRETE

CHARTS ARE BASED ON TYPICAL EDGE DISTANCE OF 3 1/2" [12dia. + 1/2" MAX. FOR STUCCO ALLOWANCE (SA).]

SPACING VALUES FOR INTERMEDIATE BLADE HEIGHTS & WIND PRESSURES MAY BE INTERPOLATED.

MASONRY

BLADE HEIGHT (psf)	DESIGN WIND PRESSURE 40	60	80	100	150	200	240
	FASTENER "A" SPACING						
60	8.1	5.4	4.0	3.2	--	--	--
72	6.7	4.5	3.3	2.7	--	--	--
97	5.0	3.3	--	--	--	--	--
113	4.2	2.8	--	--	--	--	--
129	3.7	--	--	--	--	--	--
144	3.3	--	--	--	--	--	--

CONCRETE 3000 PSI MIN.

BLADE HEIGHT (psf)	DESIGN WIND PRESSURE 40	60	80	100	150	200	240
	FASTENER "A" SPACING						
60	18.0	18.0	18.0	15.9	10.6	7.9	6.6
72	18.0	18.0	16.6	13.3	8.8	6.6	5.5
97	18.0	16.4	12.3	9.8	6.6	--	--
113	18.0	14.1	10.6	8.4	5.6	--	--
129	18.0	12.4	9.3	7.4	--	--	--
144	16.6	11.1	8.3	6.6	--	--	--

PRODUCT REVISED
as complying with the Florida Building Code
Acceptance No 06-1108.02
Expiration Date FEBRUARY 1, 2009
By
Miami-Dade Product Control Division

WOOD

BLADE HEIGHT (psf)	DESIGN WIND PRESSURE 40	60	80
	FASTENER "A" SPACING		
60	18.0	14.5	10.9
72	18.0	12.1	9.0
97	13.5	9.0	6.7
113	11.6	7.7	5.7
129	10.1	6.7	5.1
144	9.0	6.0	4.5

FASTENER "B"

BLADE HEIGHT (psf)	DESIGN WIND PRESSURE 40	60	80	100	150	200	240
	FASTENER "B" SPACING						
60	18.0	18.0	15.6	12.4	8.3	6.2	5.1
72	18.0	17.3	13.0	10.4	6.9	5.1	4.3
97	18.0	12.8	9.6	7.7	5.1	--	--
113	16.6	11.0	8.2	6.6	4.4	--	--
129	14.5	9.6	7.2	5.7	--	--	--
144	13.0	8.6	6.5	5.1	--	--	--

REDUCED EDGE DISTANCE FASTENER SPACING IN MASONRY/CONCRETE

CHARTS ARE BASED ON REDUCED EDGE DISTANCE OF 2" [6dia. + 1/2" MAX FOR STUCCO ALLOWANCE (SA).]

MASONRY

BLADE HEIGHT (psf)	DESIGN WIND PRESSURE 40	60	80	100	150	200	240
	FASTENER "A" SPACING						
60	4.0	2.7	--	--	--	--	--
72	3.3	--	--	--	--	--	--
97	--	--	--	--	--	--	--
113	--	--	--	--	--	--	--
129	--	--	--	--	--	--	--
144	--	--	--	--	--	--	--

CONCRETE 3000 PSI MIN.

BLADE HEIGHT (psf)	DESIGN WIND PRESSURE 40	60	80	100	150	200	240
	FASTENER "A" SPACING						
60	18.0	13.2	9.9	7.9	5.3	3.9	3.3
72	16.5	11.0	8.2	6.6	4.4	3.3	2.7
97	12.3	8.1	6.1	4.8	3.3	--	--
113	10.5	7.0	5.2	4.2	2.7	--	--
129	9.2	6.1	4.6	3.6	--	--	--
144	8.2	5.5	4.1	3.3	--	--	--

SHUTTER ENTERPRISES GROUP INC.
4201 NE 12TH TERRACE
OAKLAND PARK, FL 33334

COPYRIGHT © 2005

DRAWING TITLE:
NOTICE OF ACCEPTANCE
BERNARDO ACCORDION
PRODUCT APPROVAL

D.L. Fowler
Professional Engineer
Florida License No.
PE0050458

12-12-06

DRAWN:	WTW
DATE:	12-13-06
APPROVED:	
DATE:	
DRAWING NO:	95-100
SIZE: B	REV: E
SCALE:	1:5
SHEET:	5 OF 11

REMOVABLE TRACK

FASTENER SPACING IN CONCRETE

CHARTS ARE BASED ON TYPICAL EDGE DISTANCE OF 3 1/2"
[12dia. + 1/2" MAX. FOR STUCCO ALLOWANCE (SA).]

SPACING VALUES FOR INTERMEDIATE BLADE HEIGHTS & WIND PRESSURES MAY BE INTERPOLATED.

CONCRETE 3000 PSI MIN.

BLADE HEIGHT	DESIGN WIND PRESSURE psf 40	60	80	100	150	200	240
	FASTENER "A" SPACING						
60	18.0	18.0	18.0	18.0	18.0	14.8	12.3
72	18.0	18.0	18.0	18.0	16.5	12.3	10.3
97	18.0	18.0	18.0	18.0	12.2	9.1	7.6
113	18.0	18.0	18.0	15.7	10.6	7.8	--
129	18.0	18.0	17.2	13.8	9.2	--	--
144	18.0	18.0	15.4	12.3	--	--	--

REDUCED EDGE DISTANCE FASTENER SPACING IN CONCRETE

CHARTS ARE BASED ON REDUCED EDGE DISTANCE OF 1 3/4"
[6dia. + 1/2" MAX. FOR STUCCO ALLOWANCE (SA).]

CONCRETE 3000 PSI MIN.

BLADE HEIGHT	DESIGN WIND PRESSURE psf 40	60	80	100	150	200	240
	FASTENER "A" SPACING						
60	18.0	18.0	18.0	14.8	9.9	7.4	6.1
72	18.0	18.0	15.4	12.3	8.2	6.1	5.1
97	18.0	15.3	11.4	9.1	6.0	4.5	3.8
113	18.0	13.1	9.8	7.8	5.2	3.9	--
129	17.2	11.4	8.4	6.9	4.5	--	--
144	15.4	10.2	7.7	6.1	--	--	--

7 REMOVABLE TRACK

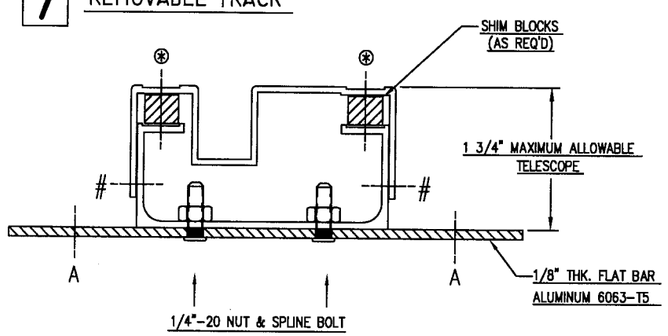

APPROVED FASTENERS

FASTENER "A"

MANUF.	TYPE	DIA.	IMBED.
ELCO	TAPCON	.25	1.75
RAWL	CALK-IN	1/4-20	.875

TOTAL OF (2) FASTENERS OF EITHER TYPE CAN BE USED, TO SECURE SILL CAP. FASTENING MUST BE LOCATED ACROSS OR DIAGONAL FROM EACH OTHER.

FASTENERS:

AD-66-ABC POP RIVET (16" O.C.)

⊛ #10 X 1" S.S.TRUSS HEAD (16" O.C.)

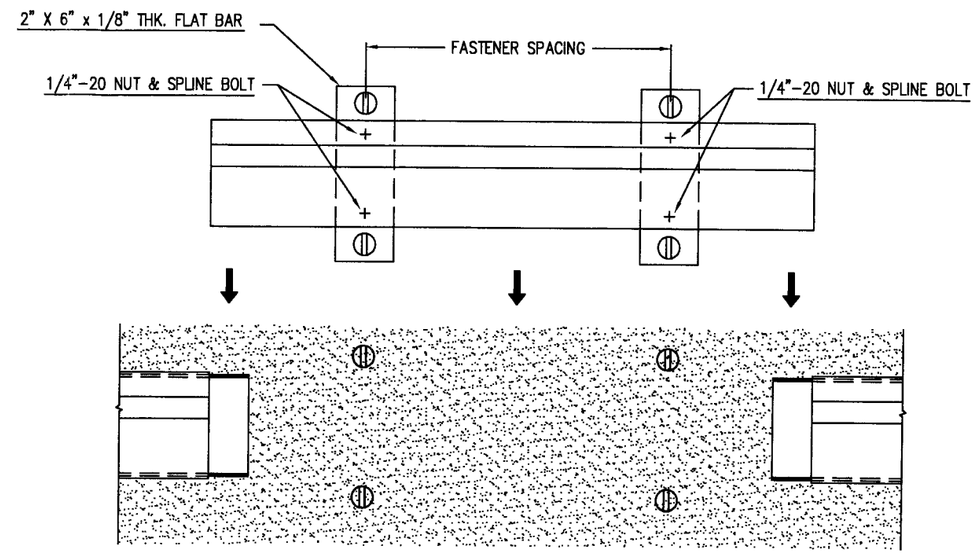

TOP VIEW

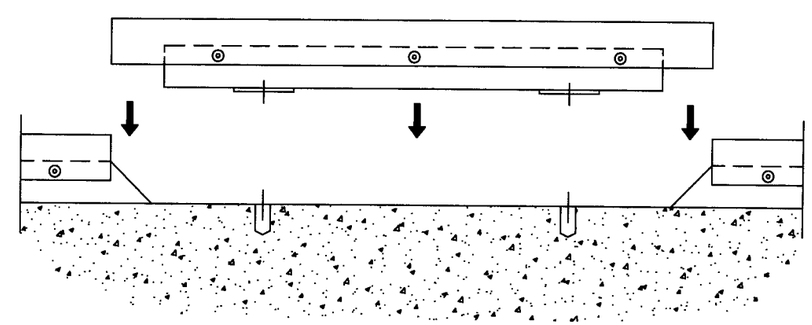

ELEVATION

PRODUCT REVISED
as complying with the Florida
Building Code
Acceptance No. 06-1108.02
Expiration Date FEBRUARY 1, 2008
By
Miami Dade Product Control
Division

SHUTTER ENTERPRISES GROUP INC.
4201 NE 12TH TERRACE
OAKLAND PARK, FL 33334
COPYRIGHT © 2005

DRAWING TITLE:
NOTICE OF ACCEPTANCE
BERNARDO ACCORDION
PRODUCT APPROVAL

D.L. Fowler
Professional Engineer
Florida License No.
PE0050458

12-16-06

DRAWN:	WHW
DATE:	12-13-06
APPROVED:	
DATE:	
DRAWING NO:	95-100
SIZE: B	REV: E
SCALE:	NA
SHEET:	9 OF 11

TRACK MOUNTING CONNECTIONS

1A ANGLE BUILD-OUT HEADER REVERSE

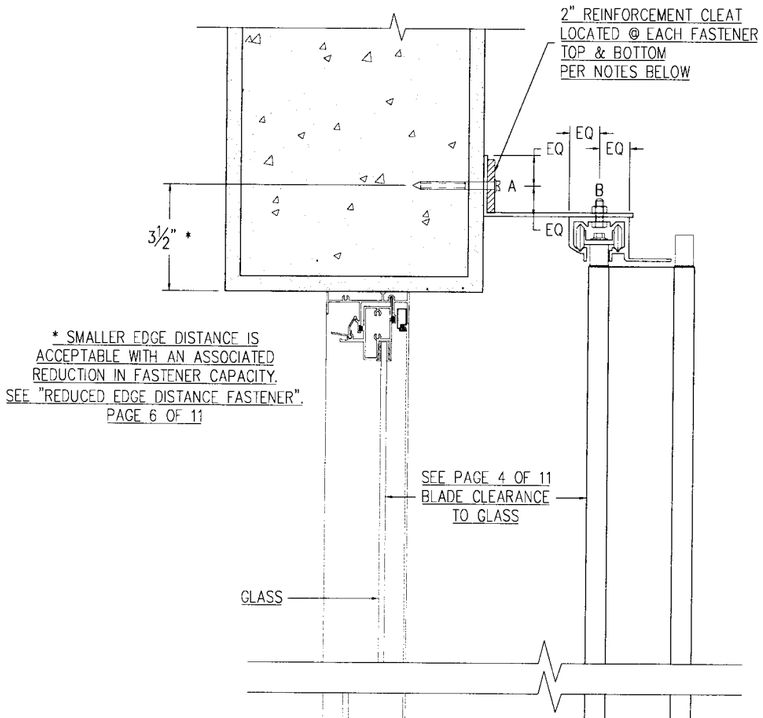

APPROVED FASTENERS

FASTENER "A"

MANUF.	TYPE	DIA.	IMBED.
RAWL	TAPPER	.25	1.75
RAWL	CALK-IN	.25	.875
ELCO	TAPCON	.25	1.75
WOOD	S.S. SCR	#14	2"

FASTENER "B"

MANUF.	TYPE	DIA.	HEIGHT
BOLT & NUT	18-8 S.S. STEEL	1/4-20	.75

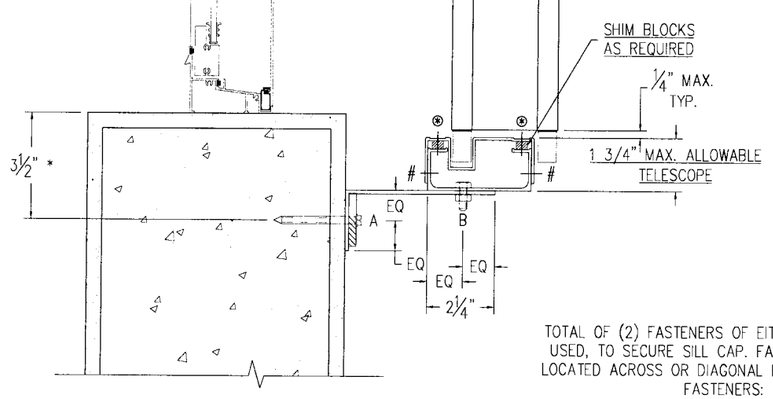

TOTAL OF (2) FASTENERS OF EITHER TYPE CAN BE USED, TO SECURE SILL CAP. FASTENING MUST BE LOCATED ACROSS OR DIAGONAL FROM EACH OTHER.

FASTENERS:

AD-66-ABC POP RIVET (16" O.C.)

⊙ #10 X 1" S.S.TRUSS HEAD (16" O.C.)

2A ANGLE BUILD-OUT SILL

NOTES

1. NO CLEATS ARE REQUIRED AT ANY HEIGHT OR PSF IF 1/4" THICK 6063-T5 ANGLES SIZED PER PAGE 3 OF 11 ARE USED.
2. NO CLEATS ARE REQUIRED FOR REDUCED EDGE DISTANCE FASTENER SPACINGS.
3. CLEATS ARE REQUIRED FOR ALL CONCRETE INSTALLATIONS.
4. NO CLEATS ARE REQUIRED FOR MASONRY INSTALLATIONS.

FASTENER SPACING IN MASONRY/CONCRETE

CHARTS ARE BASED ON TYPICAL EDGE DISTANCE OF 3 1/2" [12dia. + 1/2" MAX. FOR STUCCO ALLOWANCE (SA).]

SPACING VALUES FOR INTERMEDIATE BLADE HEIGHTS & WIND PRESSURES MAY BE INTERPOLATED.

MASONRY

BLADE HEIGHT	DESIGN WIND PRESSURE psf 40	60	80	100	150	200	240
	FASTENER "A" SPACING						
60	3.3	--	--	--	--	--	--
72	2.7	--	--	--	--	--	--
97	--	--	--	--	--	--	--
113	--	--	--	--	--	--	--
129	--	--	--	--	--	--	--
144	--	--	--	--	--	--	--

CONCRETE 3000 PSI MIN.

BLADE HEIGHT	DESIGN WIND PRESSURE psf 40	60	80	100	150	200	240
	FASTENER "A" SPACING						
60	16.4	11.4	8.7	7.0	4.8	3.6	3.0
72	13.7	9.5	7.2	5.9	3.9	3.0	2.5
97	10.2	7.0	5.4	4.3	3.0	--	--
113	8.7	6.0	4.6	3.7	2.5	--	--
129	7.6	5.3	4.0	3.3	--	--	--
144	6.8	4.7	3.6	2.9	--	--	--

WOOD

BLADE HEIGHT	DESIGN WIND PRESSURE psf 40	60	80
	FASTENER "A" SPACING		
60	9.0	6.2	4.8
72	7.5	5.2	3.9
97	5.5	3.9	3.0
113	4.8	3.3	2.5
129	4.2	2.9	--
144	3.7	2.6	--

FASTENER "B"

BLADE HEIGHT	DESIGN WIND PRESSURE psf 40	60	80	100	150	200	240
	FASTENER "B" SPACING						
60	13.0	8.7	6.5	5.2	3.4	2.6	--
72	10.8	7.2	5.4	4.3	2.9	--	--
97	8.1	5.4	4.0	3.2	--	--	--
113	6.9	4.6	3.4	2.7	--	--	--
129	6.0	4.0	3.0	--	--	--	--
144	5.4	3.6	2.7	--	--	--	--

REDUCED EDGE DISTANCE FASTENER SPACING IN CONCRETE

CHARTS ARE BASED ON REDUCED EDGE DISTANCE OF 2" [6dia. + 1/2" MAX. FOR STUCCO ALLOWANCE (SA).]

CONCRETE 3000 PSI MIN.

BLADE HEIGHT	DESIGN WIND PRESSURE psf 40	60	80	100	150	200	240
	FASTENER "A" SPACING						
60	8.1	5.7	4.3	3.5	--	--	--
72	6.8	4.7	3.6	2.8	--	--	--
97	5.1	3.5	2.7	--	--	--	--
113	4.3	3.0	--	--	--	--	--
129	3.8	2.6	--	--	--	--	--
144	3.3	--	--	--	--	--	--

PRODUCT REVISED
as complying with the Florida Building Code
Acceptance No 06-1108.02
Expiration Date FEBRUARY 1, 2008
By
Miami-Dade Product Control Division

SHUTTER ENTERPRISES GROUP INC.
4201 NE 12TH TERRACE
OAKLAND PARK, FL 33334

COPYRIGHT © 2005

DRAWING TITLE:

NOTICE OF ACCEPTANCE
BERNARDO ACCORDION
PRODUCT APPROVAL

D.L. Fowler
Professional Engineer
Florida License No.
PE0050458

12-26-06

DRAWN:	WTW
DATE:	12-13-06
APPROVED:	
DATE:	
DRAWING NO:	95-100
SIZE: B	REV: E
SCALE:	1:5
SHEET:	6 OF 11

TRACK MOUNTING CONNECTIONS

3 CEILING MOUNT

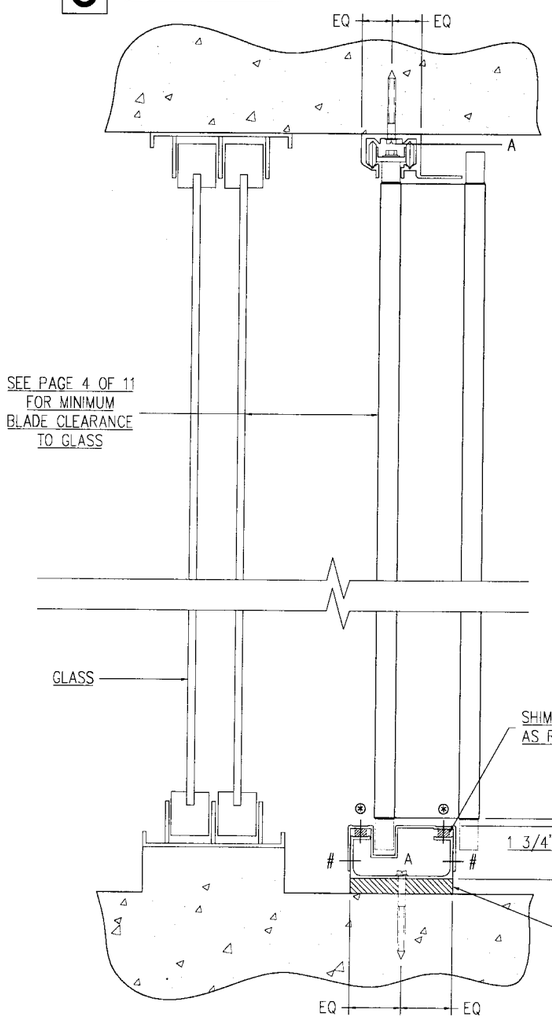

APPROVED FASTENERS

FASTENER "A" & "B"

MANUF.	TYPE	DIA.	IMBED.
RAWL	TAPPER	.25	1.75
RAWL	CALK-IN	.25	.875
ELCO	TAPCON	.25	1.75

4 FLOOR MOUNT

TOTAL OF (2) FASTENERS OF EITHER TYPE CAN BE USED, TO SECURE SILL CAP. FASTENING MUST BE LOCATED ACROSS OR DIAGONAL FROM EACH OTHER.

FASTENERS:

\# AD-66-ABC POP RIVET (16" O.C.)

* #10 X 1" S.S.TRUSS HEAD (16" O.C.)

FASTENER SPACING IN MASONRY/CONCRETE

CHARTS ARE BASED ON TYPICAL EDGE DISTANCE OF 3 1/2" [12dia. + 1/2" MAX. FOR STUCCO ALLOWANCE (SA).]

SPACING VALUES FOR INTERMEDIATE BLADE HEIGHTS & WIND PRESSURES MAY BE INTERPOLATED.

MASONRY

BLADE HEIGHT	DESIGN WIND PRESSURE psf 40	60	80	100	150	200	240
	FASTENER "A" SPACING						
60	8.0	5.4	4.0	3.2	--	--	--
72	6.6	4.5	3.3	2.7	--	--	--
97	4.9	3.3	--	--	--	--	--
113	4.2	2.8	--	--	--	--	--
129	3.7	--	--	--	--	--	--
144	3.3	--	--	--	--	--	--

CONCRETE 3000 PSI MIN.

BLADE HEIGHT	DESIGN WIND PRESSURE psf 40	60	80	100	150	200	240
	FASTENER "A" SPACING						
60	18.0	18.0	18.0	18.0	12.7	9.5	7.9
72	18.0	18.0	18.0	15.9	10.6	7.9	6.6
97	18.0	18.0	14.7	11.8	7.9	--	--
113	18.0	16.9	12.6	10.1	6.7	--	--
129	18.0	14.8	11.1	8.9	--	--	--
144	18.0	13.2	9.9	7.9	--	--	--

REDUCED EDGE DISTANCE FASTENER SPACING IN MASONRY/CONCRETE

CHARTS ARE BASED ON REDUCED EDGE DISTANCE OF 1 3/4" [6dia. + 1/2" MAX. FOR STUCCO ALLOWANCE (SA).]

MASONRY

BLADE HEIGHT	DESIGN WIND PRESSURE psf 40	60	80	100	150	200	240
	FASTENER "A" SPACING						
60	3.9	2.7	--	--	--	--	--
72	3.3	--	--	--	--	--	--
97	--	--	--	--	--	--	--
113	--	--	--	--	--	--	--
129	--	--	--	--	--	--	--
144	--	--	--	--	--	--	--

CONCRETE 3000 PSI MIN.

BLADE HEIGHT	DESIGN WIND PRESSURE psf 40	60	80	100	150	200	240
	FASTENER "A" SPACING						
60	18.0	15.9	11.9	9.5	6.3	4.7	4.2
72	18.0	13.2	9.9	7.9	5.3	3.9	3.3
97	14.7	9.8	7.3	5.9	3.9	--	--
113	12.6	8.4	6.3	5.0	3.3	--	--
129	11.1	7.4	5.5	4.4	--	--	--
144	9.9	6.6	4.9	3.9	--	--	--

PRODUCT REVISED
as complying with the Florida Building Code
Acceptance No 06-1108.02
Expiration Date FEBRUARY 1, 2008
By
Miami-Dade Product Control Division

SHUTTER ENTERPRISES GROUP INC.
4201 NE 12TH TERRACE
OAKLAND PARK, FL 33334

COPYRIGHT © 2005

DRAWING TITLE:

NOTICE OF ACCEPTANCE
BERNARDO ACCORDION
PRODUCT APPROVAL

D.L. Fowler
Professional Engineer
Florida License No.
PE0050458

12-26-06

DRAWN:	WHW
DATE:	12-13-06
APPROVED:	
DATE:	
DRAWING NO:	95-100
SIZE: B	REV: E
SCALE:	1:5
SHEET:	7 OF 11

TRACK MOUNTING CONNECTIONS

5 FLUSH MOUNT TOP

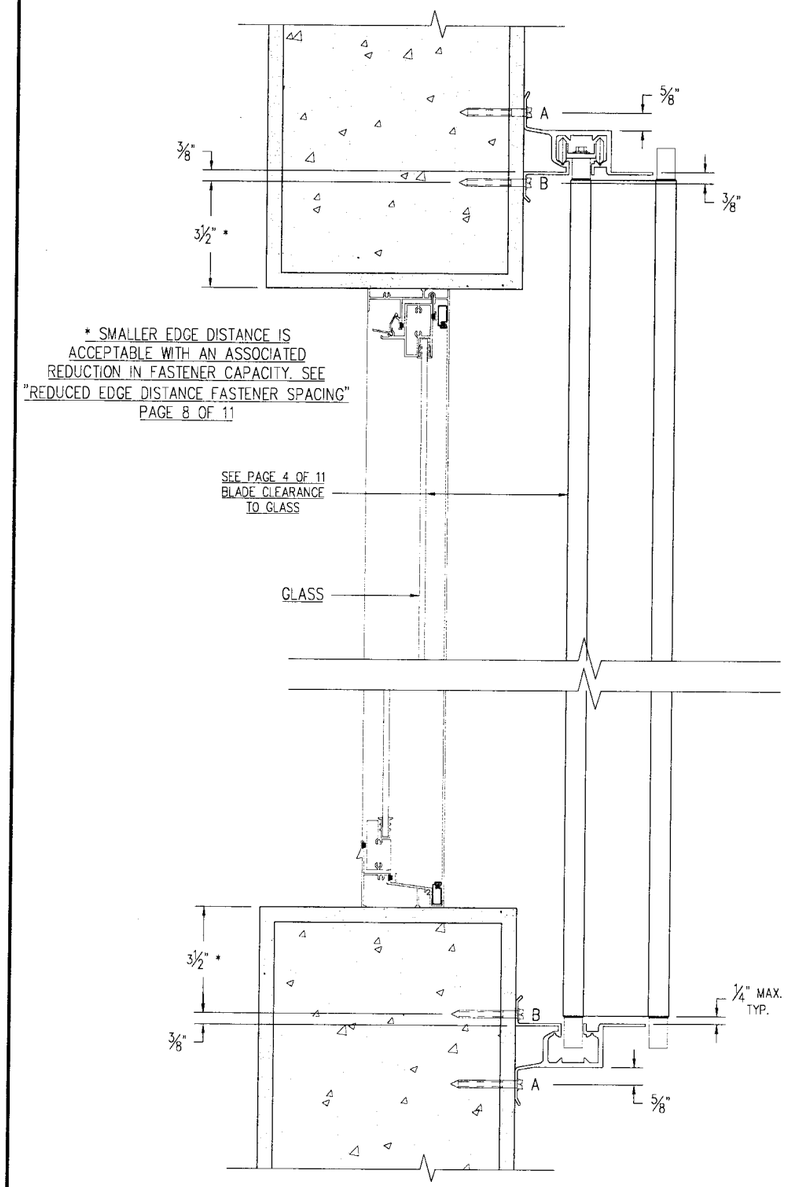

6 FLUSH MOUNT BOTTOM

APPROVED FASTENERS

FASTENER "A" & "B"

MANUF.	TYPE	DIA.	IMBED.
RAWL	TAPPER	.25	1.75
RAWL	CALK-IN	.25	.875
ELCO	TAPCON	.25	1.75
WOOD	S.S. SCR	#14	2"

FASTENER SPACING IN MASONRY/CONCRETE

CHARTS ARE BASED ON TYPICAL EDGE DISTANCE OF 3 1/2" [12dia. + 1/2" MAX. FOR STUCCO ALLOWANCE (SA).]

SPACING VALUES FOR INTERMEDIATE BLADE HEIGHTS & WIND PRESSURES MAY BE INTERPOLATED.

MASONRY

BLADE HEIGHT	DESIGN WIND PRESSURE psf 40	60	80	100	150	200	240
	FASTENER "A" SPACING						
60	18.0	18.0	18.0	18.0	15.8	11.9	11.9
72	18.0	18.0	18.0	18.0	13.2	9.9	8.3
97	18.0	18.0	18.0	14.7	9.8	--	--
113	18.0	18.0	15.6	12.6	8.4	--	--
129	18.0	18.0	13.8	11.1	--	--	--
144	18.0	16.3	12.3	9.9	--	--	--
	FASTENER "B" SPACING						
60	17.5	11.7	8.8	7.1	4.7	3.6	3.0
72	14.6	9.8	7.2	5.9	3.9	3.0	--
97	10.9	7.3	5.4	4.4	2.9	--	--
113	9.3	6.3	4.7	3.8	2.5	--	--
129	8.2	5.5	4.1	3.3	--	--	--
144	7.4	4.9	3.7	3.0	--	--	--

CONCRETE 3000 PSI MIN.

BLADE HEIGHT	DESIGN WIND PRESSURE psf 40	60	80	100	150	200	240
	FASTENER "A" SPACING						
60	18.0	18.0	18.0	18.0	18.0	18.0	18.0
72	18.0	18.0	18.0	18.0	1'8.0	18.0	18.0
97	18.0	18.0	18.0	18.0	18.0	--	--
113	18.0	18.0	18.0	18.0	18.0	--	--
129	18.0	18.0	18.0	18.0	--	--	--
144	18.0	18.0	18.0	18.0	--	--	--
	FASTENER "B" SPACING						
60	18.0	18.0	18.0	18.0	18.0	18.0	18.0
72	18.0	18.0	18.0	18.0	18.0	18.0	16.5
97	18.0	18.0	18.0	18.0	18.0	--	--
113	18.0	18.0	18.0	18.0	16.8	--	--
129	18.0	18.0	18.0	18.0	--	--	--
144	18.0	18.0	18.0	18.0	--	--	--

REDUCED EDGE DISTANCE FASTENER SPACING IN MASONRY/CONCRETE

CHARTS ARE BASED ON REDUCED EDGE DISTANCE OF 1 3/4" [6dia. + 1/2" MAX. FOR STUCCO ALLOWANCE (SA).]

MASONRY

BLADE HEIGHT	DESIGN WIND PRESSURE psf 40	60	80	100	150	200	240
	FASTENER "A" SPACING						
60	18.0	18.0	14.5	11.7	7.8	5.9	4.9
72	18.0	16.0	12.1	9.8	6.5	4.9	4.1
97	17.6	12.0	9.0	7.3	4.8	--	--
113	15.2	10.3	7.8	6.3	4.2	--	--
129	13.3	9.0	6.9	5.5	--	--	--
144	12.0	8.1	6.1	4.9	--	--	--
	FASTENER "B" SPACING						
60	8.7	5.8	4.4	3.5	--	--	--
72	7.2	4.8	3.6	2.9	--	--	--
97	5.4	3.6	2.7	--	--	--	--
113	4.6	3.1	--	--	--	--	--
129	4.1	2.7	--	--	--	--	--
144	3.6	--	--	--	--	--	--

CONCRETE 3000 PSI MIN.

BLADE HEIGHT	DESIGN WIND PRESSURE psf 40	60	80	100	150	200	240
	FASTENER "A" SPACING						
60	18.0	18.0	18.0	18.0	18.0	18.0	18.0
72	18.0	18.0	18.0	18.0	18.0	18.0	18.0
97	18.0	18.0	18.0	18.0	18.0	--	--
113	18.0	18.0	18.0	18.0	18.0	--	--
129	18.0	18.0	18.0	18.0	--	--	--
144	18.0	18.0	18.0	18.0	--	--	--
	FASTENER "B" SPACING						
60	18.0	18.0	18.0	18.0	15.8	11.8	9.9
72	18.0	18.0	18.0	18.0	13.2	9.9	8.2
97	18.0	18.0	18.0	14.7	9.8	--	--
113	18.0	18.0	15.7	12.6	8.4	--	--
129	18.0	18.0	13.8	11.0	--	--	--
144	18.0	16.4	12.3	9.9	--	--	--

WOOD

BLADE HEIGHT	DESIGN WIND PRESSURE psf 40	60	80
	FASTENER "A" SPACING		
60	18.0	18.0	18.0
72	18.0	18.0	18.0
97	18.0	18.0	18.0
113	18.0	18.0	18.0
129	18.0	18.0	18.0
144	18.0	18.0	18.0
	FASTENER "B" SPACING		
60	18.0	18.0	18.0
72	18.0	18.0	18.0
97	18.0	18.0	14.6
113	18.0	16.5	12.5
129	18.0	14.5	11.0
144	18.0	12.9	9.8

PRODUCT REVISED
as complying with the Florida Building Code
Acceptance No 06-1108.02
Expiration Date FEBRUARY 1, 2008
By
Miami Dade Product Control Division

SHUTTER ENTERPRISES GROUP INC.
4201 NE 12TH TERRACE
OAKLAND PARK, FL 33334

COPYRIGHT © 2005

DRAWING TITLE:
NOTICE OF ACCEPTANCE
BERNARDO ACCORDION
PRODUCT APPROVAL

D.L. Fowler
Professional Engineer
Florida License No.
PE0050458

12-16-06

DRAWN:	WHW
DATE:	12-13-06
APPROVED:	
DATE:	
DRAWING NO:	95-100
SIZE: B	REV: E
SCALE:	1:5
SHEET:	8 OF 11

CORNER MULLION OPTIONS & END BLADE FASTENING

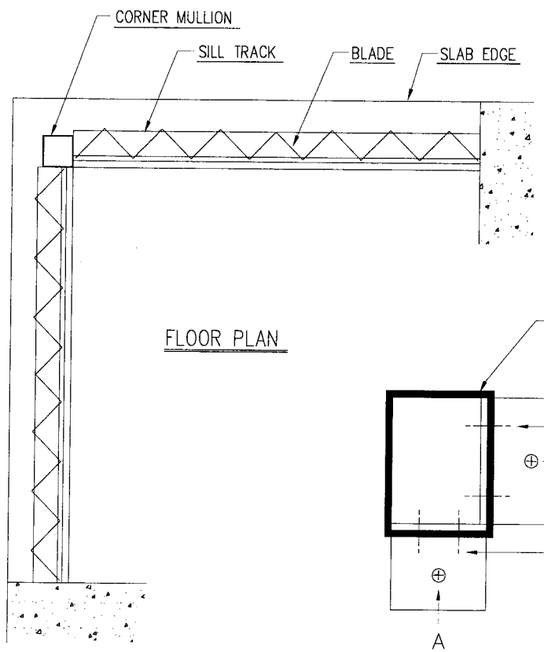

FLOOR PLAN

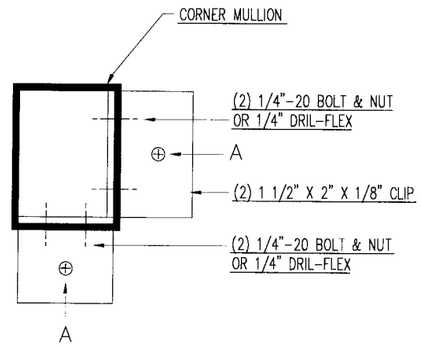

CORNER MULLION

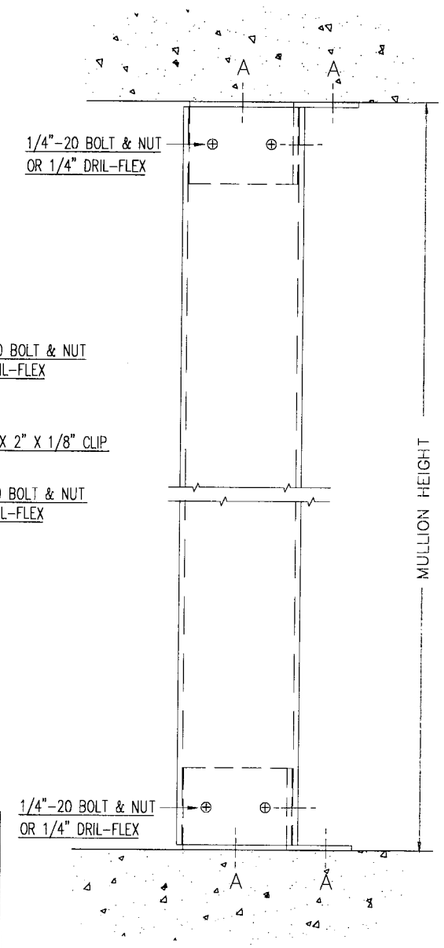

ELEVATION

DESIGN LOAD (PSF)

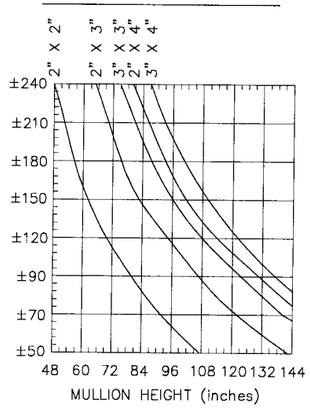

APPROVED FASTENERS

FASTENER "A"

MANUF.	TYPE	DIA.	IMBED.	MAT.
RAWL	TAPPER	.25	1.5	MASONRY/CONC.
RAWL	CALK-IN	1/4"-20	.875	MASONRY/CONC.
RAWL	LOK-BOLT	.25	1.125	MASONRY/CONC.
BOLT & NUT	18-8 S.S. STEEL	1/4"-20	.75	ALUM.
	S.S.SMS	#14	2"	WOOD

EDGE DISTANCE FOR MASONRY AND CONCRETE
(12X FASTENER DIA.) PLUS 1/2" MAX. FOR STUCCO

1

END BLADE FASTEN TO WALL

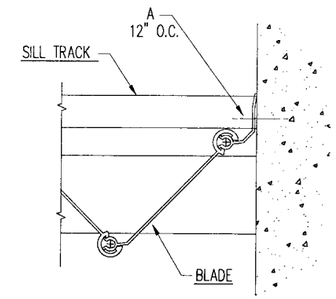

FASTENER "A"

MANUF.	TYPE	DIA.	IMBED.
RAWL	TAPPER	.25	1.5
ELCO	TAPCON	.25	1.25
	WOOD S.S.SMS	#14	2"

2

END BLADE FASTEN TO ANGLE

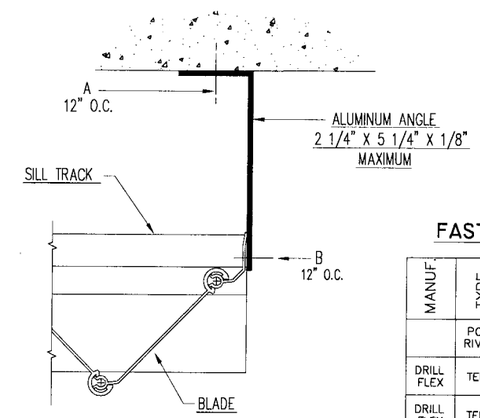

FASTENER "A"

MANUF.	TYPE	DIA.	IMBED.
RAWL	TAPPER	.25	1.5
ELCO	TAPCON	.25	1.25
	WOOD S.S.SMS	#14	2"

FASTENER "B"

MANUF.	TYPE	DIA.	IMBED.
	POP-RIVIT	3/16"	.375
DRILL FLEX	TEKS	#12-14	.5
DRILL FLEX	TEKS	1/4"-14	.5
BOLT & NUT	18-8 S.S. STEEL	1/4"-20	.75

3

END BLADE FASTEN TO MULLION

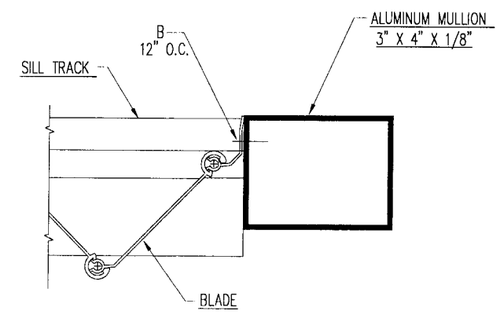

FASTENER "B"

MANUF.	TYPE	DIA.	IMBED.
	POP-RIVIT	3/16"	.375
DRILL FLEX	TEKS	#12-14	.5
DRILL FLEX	TEKS	1/4"-14	.5

PRODUCT REVISED
as complying with the Florida Building Code
Acceptance No 06-1108.03
Expiration Date ~~FEBRUARY~~ 1, 2008
By
Miami-Dade Product Control Division

SHUTTER ENTERPRISES GROUP INC.
4201 NE 12TH TERRACE
OAKLAND PARK, FL 33334

COPYRIGHT © 2005

DRAWING TITLE:

NOTICE OF ACCEPTANCE
BERNARDO ACCORDION
PRODUCT APPROVAL

D.L. Fowler
Professional Engineer
Florida License No.
PE0050458

12-13-06

DRAWN:	WTW
DATE:	12-13-06
APPROVED:	
DATE:	
DRAWING NO:	95-100
SIZE: B	REV: E
SCALE:	NA
SHEET:	10 OF 11

LOCK ASSEMBLY OPTIONS

LOCK ASSEMBLY

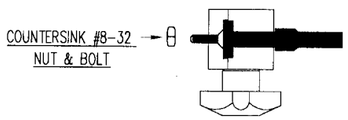

TOP VIEW

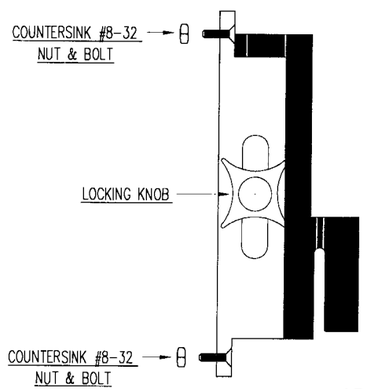

ELEVATION

LOCK REQUIREMENTS

BLADE HEIGHT	# OF LOCKS REQ'D
0 – 72"	1
73" – 97"	2
98" – 113"	2
114" – 129	3
130" – 144"	3

APPROVED FASTENERS

FASTENER "A"

MANUF.	TYPE	DIA.	IMBED.
RAWL	TAPPER	.25	1.5
ELCO	TAPCON	.25	1.25
	WOOD S.S.SCR	#14	2"

FASTENER "B"

MANUF.	TYPE	DIA.	IMBED.
	POP-RIVIT	3/16"	.375
DRILL FLEX	TEKS	#12-14	.5
DRILL FLEX	TEKS	1/4"-14	.5

1

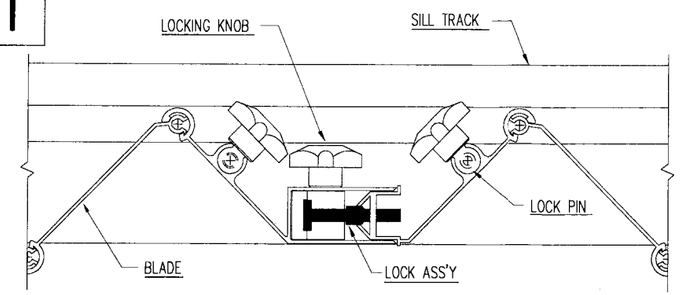

PLAN VIEW
INSIDE CONDITION

2

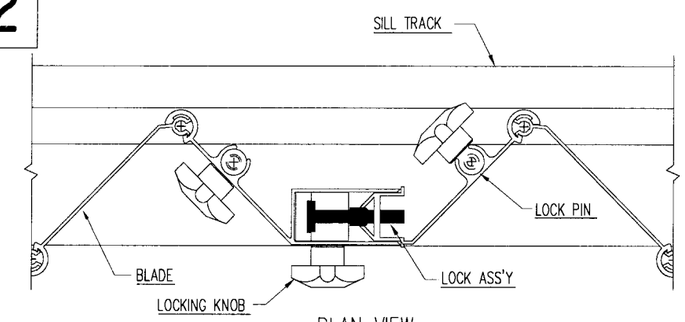

PLAN VIEW
OUTSIDE CONDITION

3

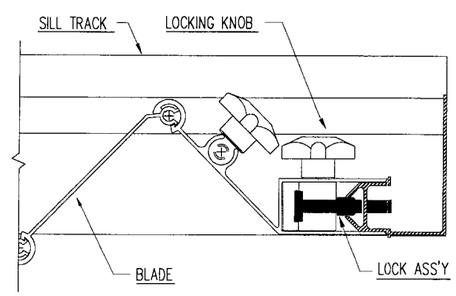

PLAN VIEW
MALE SIDE LOCK INSIDE CONDITION

4

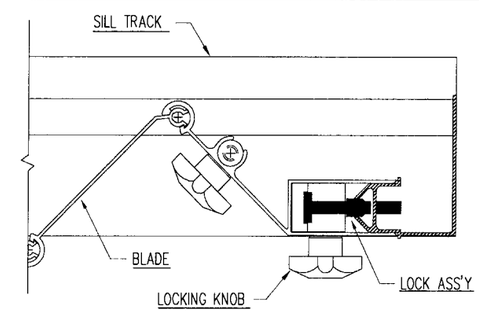

PLAN VIEW
MALE SIDE LOCK OUTSIDE CONDITION

A

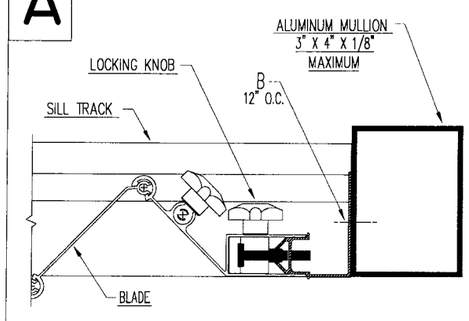

PLAN VIEW
MALE SIDE TO ALUM. MULLION

B

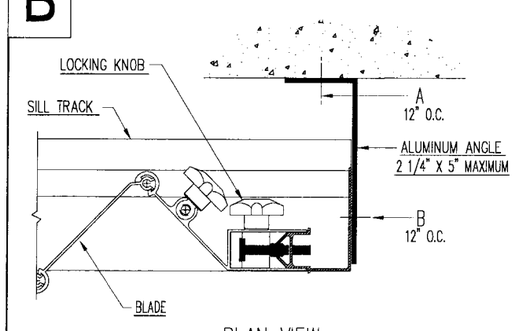

PLAN VIEW
MALE SIDE TO ALUM. ANGLE

C

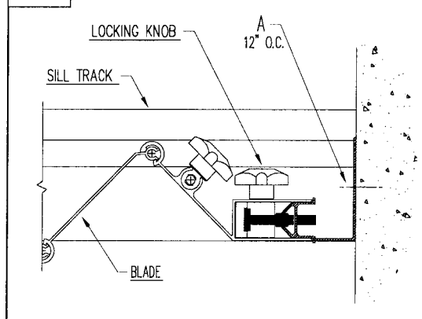

PLAN VIEW
MALE SIDE TO WALL

PRODUCT REVISED
as complying with the Florida Building Code
Acceptance No 06-1108.02
Expiration Date February 1, 2008
By
Miami Dade Product Control Division

SHUTTER ENTERPRISES GROUP INC.
4201 NE 12TH TERRACE
OAKLAND PARK, FL 33334
COPYRIGHT © 2005

DRAWING TITLE:
NOTICE OF ACCEPTANCE
BERNARDO ACCORDION
PRODUCT APPROVAL

D.L. Fowler
Professional Engineer
Florida License No.
PE0050458
12-7-06

DRAWN:	WHW
DATE:	12-13-06
APPROVED:	
DATE:	
DRAWING NO:	95-100
SIZE: B	REV: E
SCALE:	NA
SHEET:	11 OF 11