MIAMI-DADE COUNTY

BUILDING CODE COMPLIANCE OFFICE (BCCO)
PRODUCT CONTROL DIVISION

MIAMI-DADE COUNTY, FLORIDA
METRO-DADE FLAGLER BUILDING
140 WEST FLAGLER STREET, SUITE 1603
MIAMI, FLORIDA 33130-1563
(305) 375-2901 FAX (305) 375-2908
www.buldingcodeonline.com

NOTICE OF ACCEPTANCE (NOA)

Miami Wall Systems, Inc.
701 West 25th Street
Hialeah, FL 33013

SCOPE:

This NOA is being issued under the applicable rules and regulations governing the use of construction materials. The documentation submitted has been reviewed by Miami-Dade County Product Control Division and accepted by the Board of Rules and Appeals (BORA) to be used in Miami Dade County and other areas where allowed by the Authority Having Jurisdiction (AHJ).

This NOA shall not be valid after the expiration date stated below. The Miami-Dade County Product Control Division (In Miami Dade County) and/or the AHJ (in areas other than Miami Dade County) reserve the right to have this product or material tested for quality assurance purposes. If this product or material fails to perform in the accepted manner, the manufacturer will incur the expense of such testing and the AHJ may immediately revoke, modify, or suspend the use of such product or material within their jurisdiction. BORA reserves the right to revoke this acceptance, if it is determined by Miami-Dade County Product Control Division that this product or material fails to meet the requirements of the applicable building code.

This product is approved as described herein, and has been designed to comply with the Florida Building Code, including the High Velocity Hurricane Zone.

DESCRIPTION: Series 101 Aluminum Window Wall System

APPROVAL DOCUMENT: Drawing No. **MWS-101-N**, titled "Window Wall Series 101", sheets 1 through 6 of 6, dated 1/6/03 with revision #1 dated 11/13/06, prepared by manufacturer, signed and sealed by Sifang Zhao, P.E., bearing the Miami-Dade County Product Control Revision stamp with the Notice of Acceptance number and expiration date by the Miami-Dade County Product Control Division.

MISSILE IMPACT RATING: None

LABELING: Each unit shall bear a permanent label with the manufacturer's name or logo, city, state and following statement: "Miami-Dade County Product Control Approved", unless otherwise noted herein.

RENEWAL of this NOA shall be considered after a renewal application has been filed and there has been no change in the applicable building code negatively affecting the performance of this product.

TERMINATION of this NOA will occur after the expiration date or if there has been a revision or change in the materials, use, and/or manufacture of the product or process. Misuse of this NOA as an endorsement of any product, for sales, advertising or any other purposes shall automatically terminate this NOA. Failure to comply with any section of this NOA shall be cause for termination and removal of NOA.

ADVERTISEMENT: The NOA number preceded by the words Miami-Dade County, Florida, and followed by the expiration date may be displayed in advertising literature. If any portion of the NOA is displayed, then it shall be done in its entirety.

INSPECTION: A copy of this entire NOA shall be provided to the user by the manufacturer or its distributors and shall be available for inspection at the job site at the request of the Building Official.

This NOA **revises and renews NOA # 03-0213.10** and consists of this page 1 and evidence pages E-1 and E-2, as well as approval document mentioned above.

The submitted documentation was reviewed by **Manuel Perez, P.E.**

MIAMI-DADE COUNTY APPROVED

NOA No.: 06-1128.06
Expiration Date: December 2, 2008
Approval Date: March 13, 2008

Miami Wall Systems, Inc,

NOTICE OF ACCEPTANCE: EVIDENCE SUBMITTED

A. DRAWINGS

1. Manufacturer's die drawings and sections.
2. Drawing No **MWS-101-N**, Sheets 1 through 6 of 6, titled "Window Wall Series 101", dated 1/6/03 with revision #1 dated 11/13/06, prepared by manufacturer, signed and sealed by Sifang Zhao, P.E.

B. TESTS

1. Test reports on: 1) Air Infiltration Test, per FBC, TAS 202-94
   2) Uniform Static Air Pressure Test, Loading per FBC, TAS 20294
   3) Water Resistance Test, per FBC, TAS 202-94
   4) Cyclic Wind Pressure Loading per FBC, TAS 203-94

   along with marked-up drawings and installation diagram of an aluminum window wall system, prepared by Fenestration Testing Laboratory, Inc., Test Report No. **FTL 97061**, dated 8/28/97, signed and sealed by Gilbert Diamond, P.E.
   (Submitted under previous NOA #01-1108.01)
2. Test report on: 1) Uniform Static Air Pressure Test, Loading per PA 202-94
   2) Water Resistance Test, per PA 202-94
   3) Forced Entry Resistance Test, per AAMA 1302.5-76.
   4) Small Missile Impact Test per SFBC PA 201-94
   5) Cyclic Wind Pressure Test per SFBC PA 203-94

   along with marked-up drawings and installation diagram of an aluminum window wall system with a heavy duty mullion, prepared by Fenestration Testing Laboratory Inc., Test Report No. **FTL-1779**, dated Aug. 28, 1997, signed and sealed by Gilbert Diamond, P.E. ***(Submitted under previous NOA #97-1027.04)***
3. Test report on: 1) Uniform Static Air Pressure Test, Loading per PA 202-94.
   2) Small Missile Impact Test per SFBC PA 201-94
   3) Cyclic Wind Pressure Test per SFBC PA 203-94

   along with marked-up drawings and installation diagram of an aluminum window wall system with a light duty mullion, prepared by Fenestration Testing Laboratory Inc., Test Report No. **FTL-1784**, dated Aug. 28, 1997, signed and sealed by Gilbert Diamond, P.E. ***(Submitted under previous NOA #97-1027.04)***
4. Test report on: 1) Uniform Static Air Pressure Test, Loading per PA 202-94.
   2) Small Missile Impact Test per SFBC PA 201-94
   3) Cyclic Wind Pressure Test per SFBC PA 203-94

   along with marked-up drawings and installation diagram of an alum. window wall system with a non-reinforced mullion, prepared by Fenestration Testing Laboratory Inc., Test Report No. **FTL-1785**, dated Aug. 28, 1997, signed and sealed by Gilbert Diamond, P.E. ***(Submitted under previous NOA #97-1027.04)***

Manuel Perez, P.E.
Product Control Examiner
NOA No.: 06-1128.06
Expiration Date: December 2, 2008
Approval Date: March 13, 2008

NOTICE OF ACCEPTANCE: EVIDENCE SUBMITTED

C. CALCULATIONS

1. Anchor verification calculations and structural analysis, complying with FBC-2004, prepared by Xcel Engineering Corp., dated 11/14/06, signed and sealed by Sifang Zhao, P.E.
   Complies with ASTM E1300-02

D. QUALITY ASSURANCE

1. Miami Dade Building Code Compliance Office (BCCO).

E. MATERIAL CERTIFICATIONS

1. None.

F. STATEMENTS

1. Statement letter from manufacturer stating that the product has not changed and requesting a One-Year Renewal to allow the time to perform a verification test, dated November 15, 2006, signed by Patricia Valencia, Chief Engineer.
2. Statement letter of conformance, dated November 14, 2006, signed and sealed by Sifang Zhao, P.E.
3. Letter from laboratory confirming manufacturer has contracted and scheduled verification tests, issued by Fenestration Testing Laboratory, Inc., dated 10/02/07, signed by Manny Sanchez of FTL and Francisco Ortega of Miami Wall Systems, Inc.

G. OTHER

1. Notice of Acceptance No. **03-0213.10**, issued to Miami Wall Systems, Inc. for their Series 101 Aluminum Fixed Window Wall System – (1/4" Temp), approved on 03/27/03 and expiring on 12/02/06

Manuel Perez, P.E.
Product Control Examiner
NOA No.: 06-1128.06
Expiration Date: December 2, 2008
Approval Date: March 13, 2008

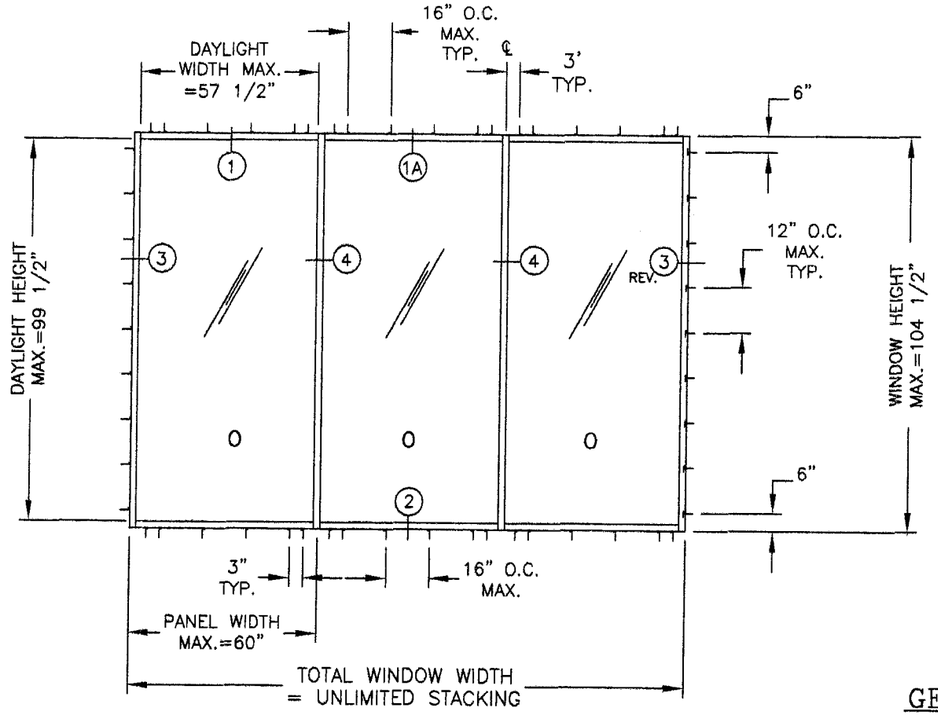

TYPICAL ELEVATION

GENERAL NOTES:

(1) FRAME HEAD AND SILL USE SAME FASTENER SPACING.

(2) MAX. PANEL SIZE: 60 7/8"x103 1/8"

PANEL SIZE INCHES	DESIGN PRESSURE PSF		NO. OF ANCHOR SCREWS IN FRAME	
WIDTH/HEIGHT	EXTERIOR	INTERIOR	HEAD & SILL	ALL JAMBS
TEST REPORT#1785. NO REINFORCEMENT				
36 x 79 1/8	60.0	60.0	4	6
48 x 79 1/8	60.0	60.0	4	6
60 x 79 1/8	60.0	60.0	4	6
36 x 95 1/8	60.0	60.0	4	8
48 x 95 1/8	60.0	60.0	4	8
60 x 95 1/8	60.0	60.0	4	8
36 x 103 1/8	60.0	60.0	4	9
48 x 103 1/8	60.0	60.0	4	9
50 x 103 1/8	60.0	60.0	4	9
TEST REPORT#1784. LIGHT REINFORCEMENT				
36 x 79 1/8	100.0	100.0	4	6
48 x 79 1/8	100.0	100.0	4	6
60 x 79 1/8	100.0	100.0	4	6
36 x 95 1/8	100.0	100.0	4	8
48 x 95 1/8	100.0	100.0	4	8
60 x 95 1/8	100.0	100.0	4	8
36 x 103 1/8	100.0	100.0	4	9
48 x 103 1/8	100.0	100.0	4	9
50 x 103 1/8	100.0	100.0	4	9
TETS REPORT#1779. HEAVY REINFORCEMENT				
36 x 79 1/8	110.0	110.0	4	6
48 x 79 1/8	110.0	110.0	4	6
60 x 79 1/8	110.0	110.0	4	6
36 x 95 1/8	110.0	110.0	4	8
48 x 95 1/8	110.0	110.0	4	8
60 x 95 1/8	110.0	110.0	6	8
36 x 103 1/8	110.0	110.0	4	9
48 x 103 1/8	110.0	110.0	6	9
50 x 103 1/8	110.0	110.0	6	9

MIAMI WALL SYSTEMS, INC.
SERIES 101
ALUMINUM WINDOW WALL SYSTEM
BASE ON FTL #'S:1779 FOR 110 PSF; 1784 FOR 100 PSF & 1785 FOR 60 PSF
POSITIVE & NEGATIVE DESIGN PRESSURE
W.T.P.: 20 PSF
GLASS: 1/4" TEMPERED. NON IMPACT SYSTEM

DWG.No.	DESIGNATION	REINFORCEMENT	LOCATION
SHEET 2 OF 6	NO REINFORCEMENT	NONE	NONE
SHEET 3 OF 6	LIGHT REINFORCEMENT	1/4" STEEL BAR *	VERT. MULL
SHEET 4 OF 6	HEAVY REINFORCEMENT	(2) 1/2x2 1/2" STEEL BAR*	VERT. MULL
		(1) 3/4x1 1/2"x1/8' ALUM. CHANEL*	

*NOTE: ALL REINFORCEMENTS MEMBERS ARE FULL LENGTH(BAR, TUBE, OR CHANNEL)

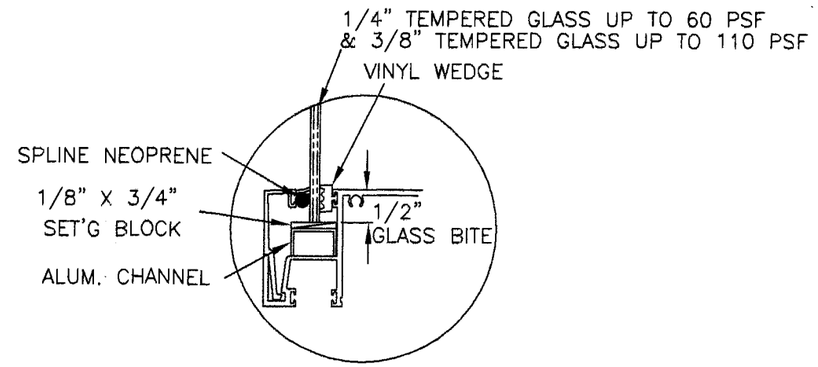

TYP. GLAZING DETAIL

PRODUCT REVISED
as complying with the Florida Building Code
Acceptance No. 06-1128.06
Expiration Date DEC. 2, 2008
By [signature]
Miami Dade Product Control Division

XCEL ENGINEERING CORP.
7785 NW 56 Street
Miami, Fl 33166
(305) 772 5023
CAN (EB) 9324

JAN 2 2 2008

Sifang Zhao Fla PE# 50685

Miami Wall Systems, Inc.
701 West 25th street
Hialeah, Florida. 33010
Phone:(305) 888-2300 Fax:(305) 888-3058

WINDOW WALL SERIES 101

WALL ELEVATION
REINFORCEMENT SUMMARY
GENERAL NOTES

revisions:

no	date	by	description
1	11/13/06	JV	UPDATE TO 2004 BUILDING CODE

date: 1/6/03
scale: HALF
design by: L.G.
drawn by: L.G.
checked by: P.V.

drawing no.
MWS-101-N

sheet 1 of 6

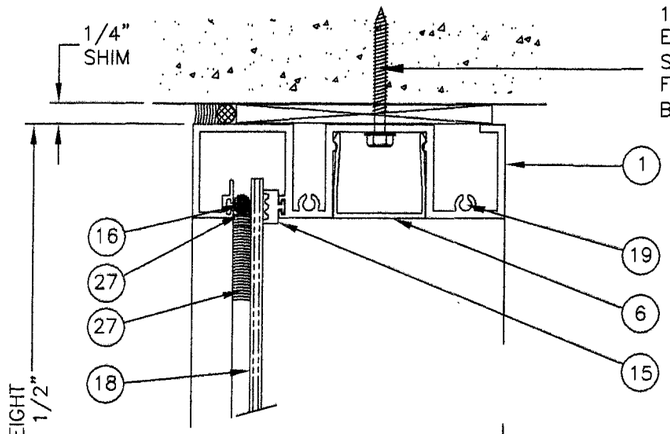

1

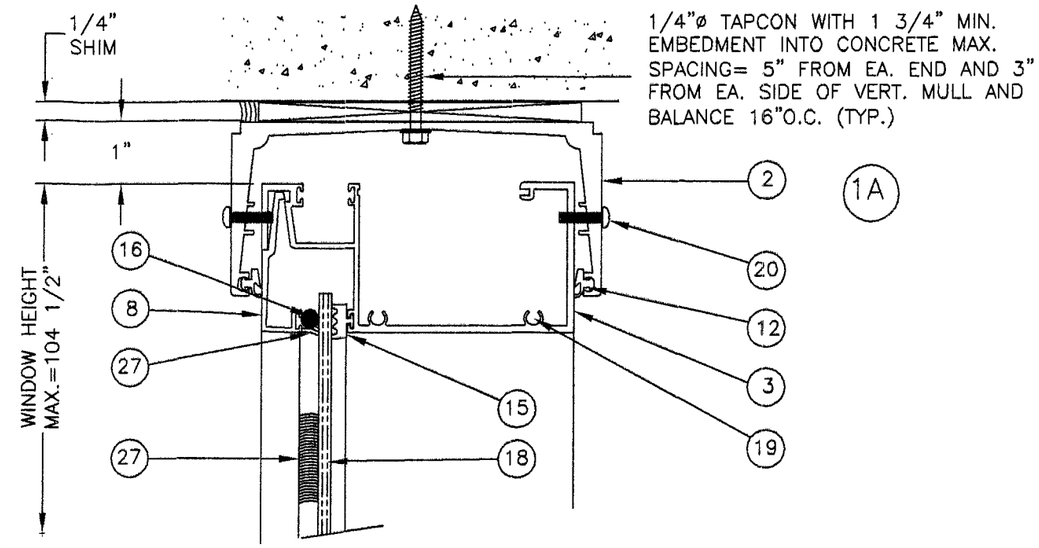

1A

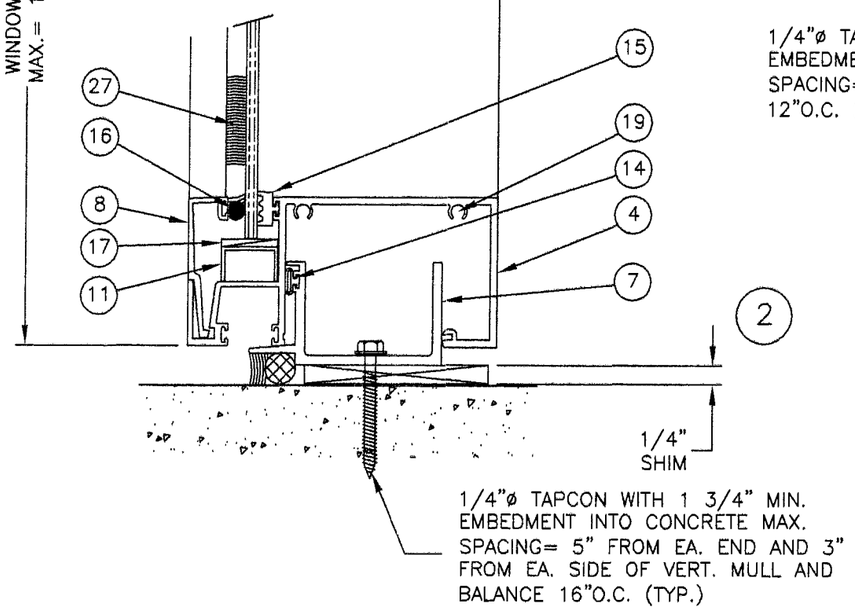

2

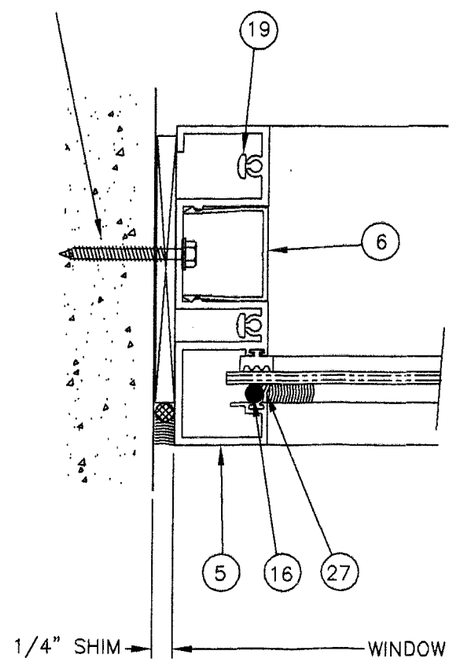

3

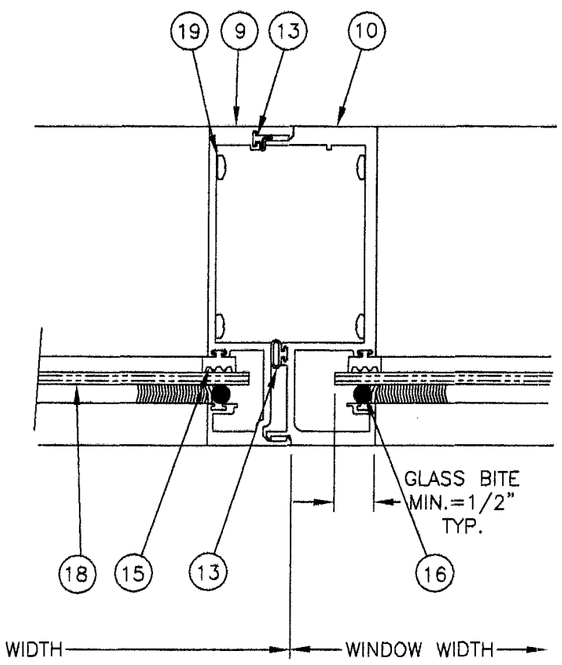

4

TEST #	DESIGNATION	D.P.(PSF)	W.T.P.
FTL# 1785	NO REINFORCEMENT	+60.0 −60.0	20.0 PSF

PRODUCT REVISED
as complying with the Florida Building Code
Acceptance No. 06-1128.06
Expiration Date DEC. 2, 2008
By Manuel Perez
Miami Dade Product Control Division

XCEL ENGINEERING CORP.
7785 NW 56 Street
Miami, Fl 33166
(305) 772 5023
CAN (EB) 9324

JAN 22 2008

Shang Zhao Fla PE# 50685

Miami Wall Systems, Inc.
701 West 25th street
Hialeah, Florida. 33010
Phone:(305) 888-2300 Fax:(305) 888-3058

WINDOW WALL SERIES 101

STANDARD INSTALLATION DETAILS NO REINFORCEMENT

revisions:

no	date	by	description
1	11/13/06	JV	UPDATE TO 2004 BUILDING CODE

date: 1/6/03
scale: HALF
design by: LG.
drawn by: LG.
checked by: P.V.

drawing no. MWS-101-N

sheet 2 of 6

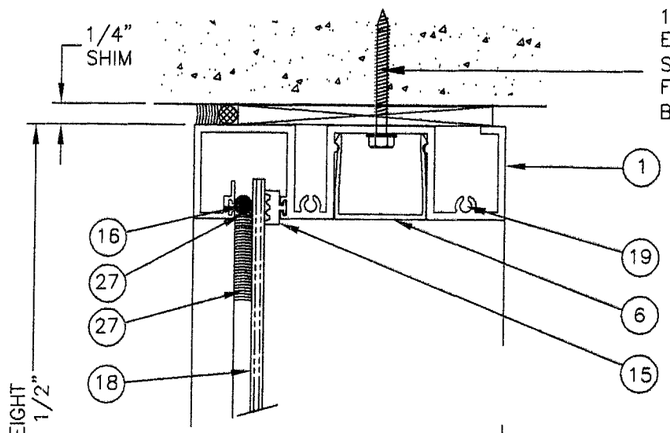

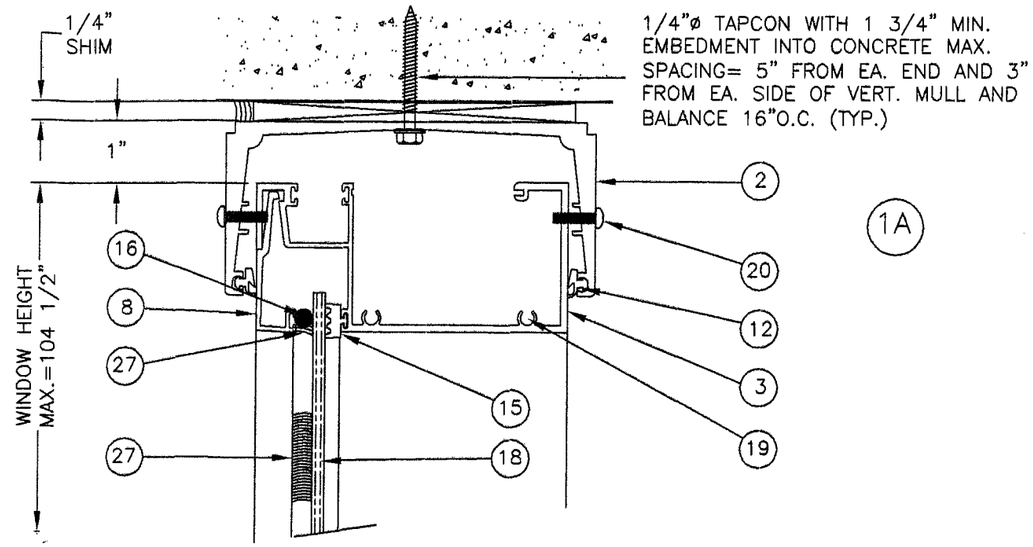

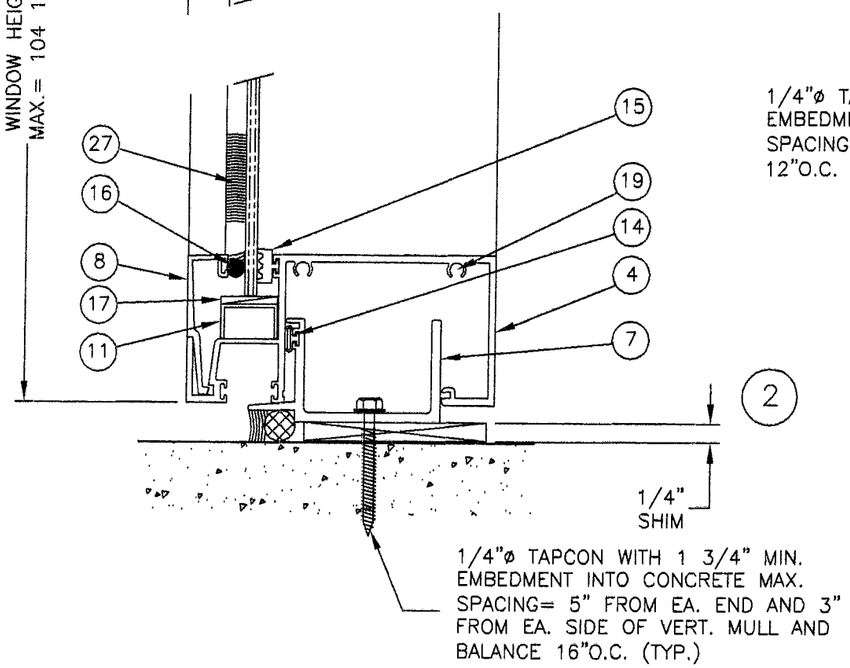

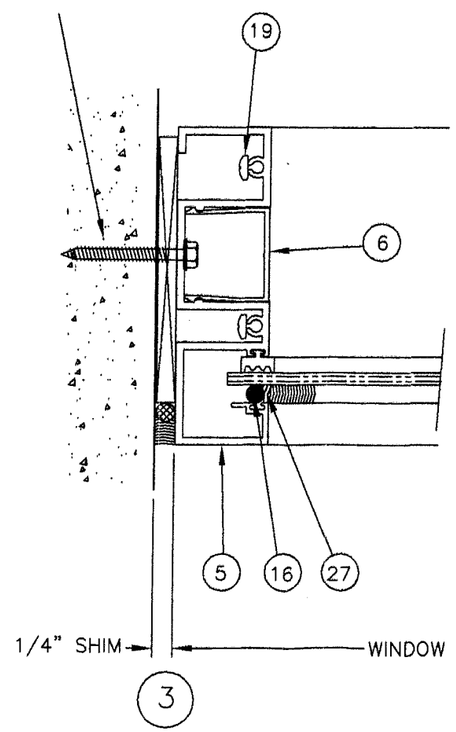

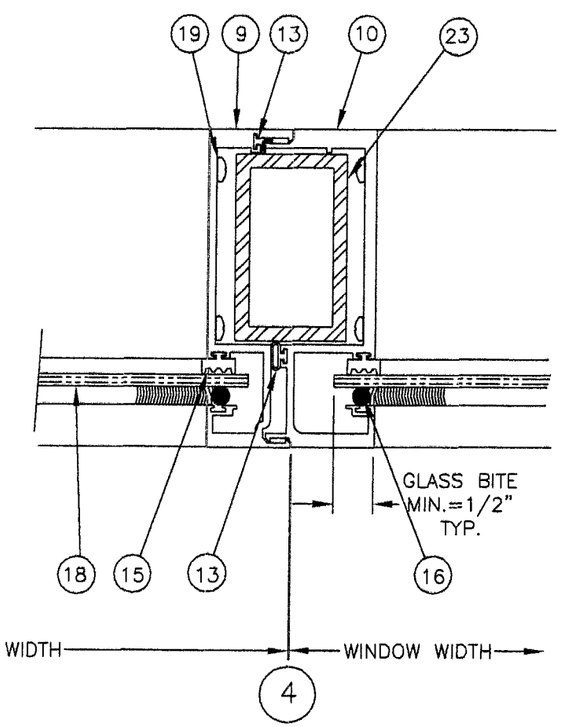

TEST #	DESIGNATION	D.P.(PSF)	W.T.P.
FTL# 1784	LIGHT REINFORCEMENT	+100.0 -100.0	20.0 PSF

PRODUCT REVISED
as complying with the Florida Building Code
Acceptance No. 06-1128.06
Expiration Date DEC. 2, 2008
By Manuel Perez
Miami Dade Product Control Division

XCEL ENGINEERING CORP.
7785 NW 56 Street.
Miami, Fl 33166
(305) 772 5023
CAN (EB) 9824

JAN 22 2008
Sifang Zhao Fla PE# 50685

Miami Wall Systems, Inc.
701 West 25th street
Hialeah, Florida. 33010
Phone:(305) 888-2300 Fax:(305) 888-3058

WINDOW WALL SERIES 101

STANDARD INSTALLATION DETAILS
LIGHT REINFORCEMENT

revisions:			
no	date	by	description
1	11/13/06	JV	UPDATE TO 2004 BUILDING CODE

date: 1/6/03
scale: HALF
design by: L.G.
drawn by: L.G.
checked by: P.V.

drawing no.
MWS-101-N

sheet 3 of 6

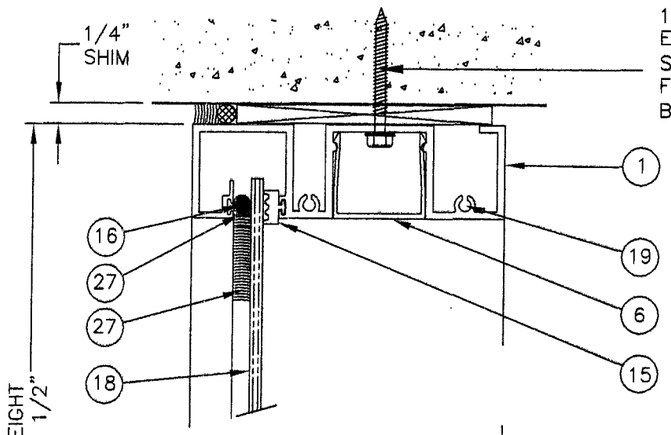

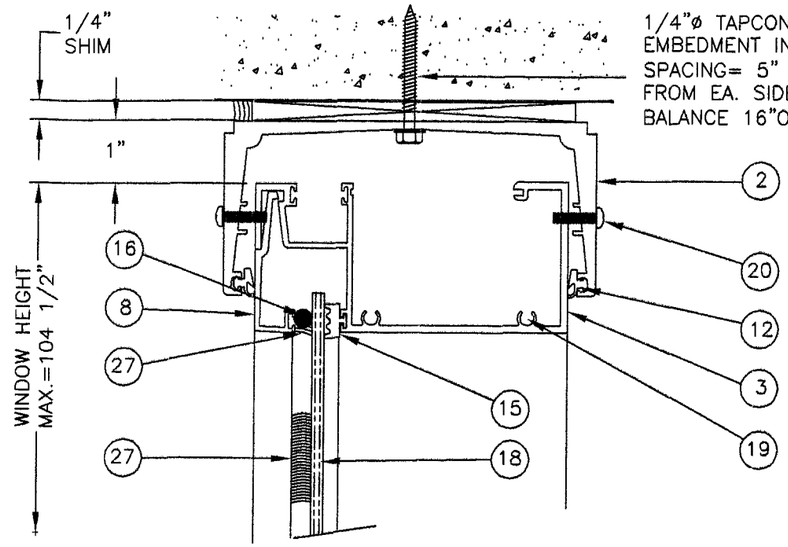

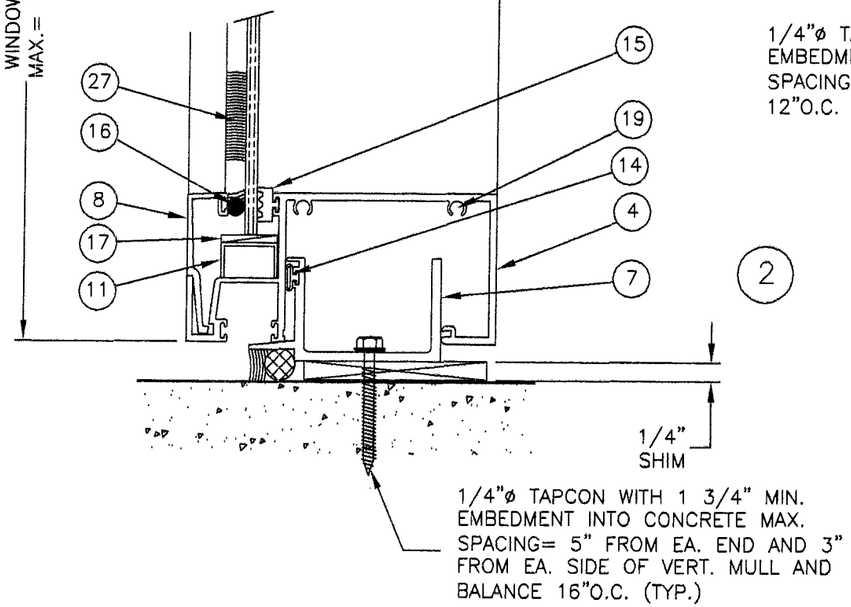

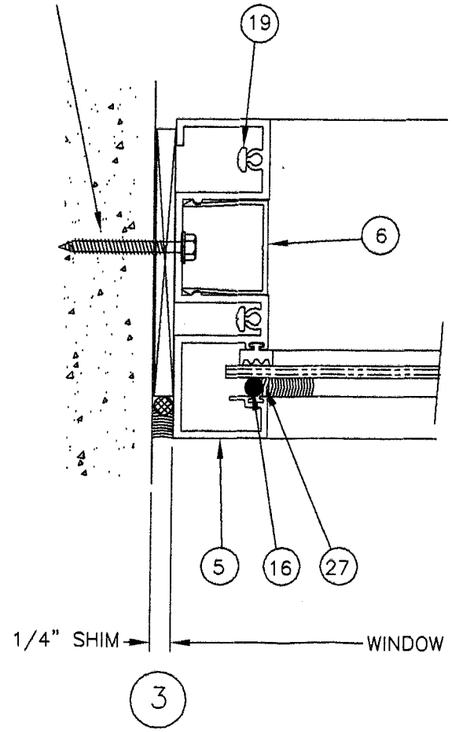

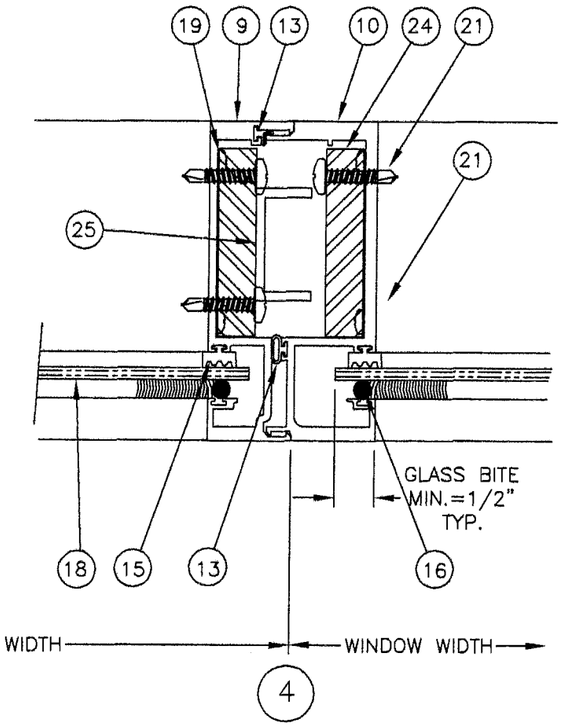

TEST #	DESIGNATION	D.P.(PSF)	W.T.P.
FTL# 1779	HEAVY REINFORCEMENT	+110.0 −110.0	20.0 PSF

PRODUCT REVISED
as complying with the Florida Building Code
Acceptance No 06-1128.06
Expiration Date DEC. 2, 2008
By Manuel Perez
Miami-Dade Product Control Division

XCEL ENGINEERING CORP.
7785 NW 56 Street.
Miami, Fl 33166
(305) 772 5023
CAN (EB) 8324

JAN 22 2008

Siang Zhao Fla PE# 50685

Miami Wall Systems, Inc.
701 West 25th street
Hialeah, Florida. 33010
Phone:(305) 888-2300 Fax:(305) 888-3058

WINDOW WALL SERIES 101

STANDARD INSTALLATION DETAILS
HEAVY REINFORCEMENT

revisions:

no	date	by	description
1	11/13/06	JV	UPDATE TO 2004 BUILDING CODE

date: 1/6/03
scale: HALF
design by: L.G.
drawn by: L.G.
checked by: P.V.

drawing no.
MWS-101-N

sheet 4 of 6

ITEM NO.	PART NO.	REQ'D	PART NAME	REMARKS
1	101-006	1	FRAME HEAD	FRAME
2	100-010	1	FRAME HEAD RECEPTOR	FRAME
3	101-001	1	FRAME HEAD (ALTERNATE)	FRAME
4	101-001	1	FRAME SILL	FRAME
5	101-006	1	FRAME JAMB	FRAME
6	101-007	FULL DIM.	FRAME JAMB COVER	FRAME
7	101-011	FULL WIDTH	WATER BAR	FRAME/SILL
8	101-002	FULL WIDTH	GLAZING BEAD	FRAME/SILL
9	101-005	1	VERT. MULLION, FEMALE	FRAME
10	101-004	1	VERT. MULLION, MALE	FRAME
11		2 PER PN'L	ALUM. CHN'L .125x7/16x3/4x4 LG.	SILL AT 1/4 POINT
12	G-117	DB'L ROW	VINYL BULB, PROTOTYPE VINYL	HEAD RECEPTOR
13	G-119-A	SNG'L ROW	VINYL BULB, PROTOTYPE VINYL	VERT. MULL
14	G-125	SNG'L ROW	VINYL BULB, D.S. BROWN	WATER BAR
15	4-2626	SNG'L ROW	VINYL WEDGE,D D.S. BROWN	FRAME
16	.240" DIA.	SNG'L ROW	SPLINE, NEOPRENE	FRAME
17		2 PER PN'L	SET'G BLOCK, 1/8,x3/4x4 LG.	SILL AT 1/4 POINT
			REED RUBBER	
18		1	1/4" TEMPERED GLASS	
19		8	#10X1" PH SMS SS	PANEL ASSY. SCREWS
20		4 PER MULL	#14x1" PH SMS	HD RECT'R (2)EA. EXT. & INT.
21		4 PER BAR	#14x1" PH SMS	ST'L BAR/VERT. MULL
22				
23		1 PER MULL	1 1/2x2 1/2x3/16" ST'L TUBE	VERT. MULL, LIGHT RINF'T.
24		2 PER MULL	1/2"x2 1/2" ST'L BAR	VERT. MULL, HEAVY RINF'T.
25		1 PER MULL	3/4x1 1/2x3/4x1/8 ALUM. CHANEL	VERT. MULL, HEAVY RINF'T.
26				
27	GE 4000	AS REQ'D	SILICONE SEALANT	GLAZING, FRAME CORNERS
28				

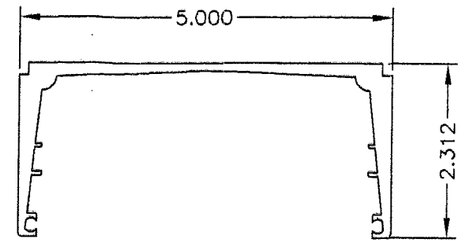

HEAD RECEPTOR DIE# 100-010
MATERIAL: ALUMINUM
ALLOY: 6005-T5
TIPICAL WALL:.100"-.188"

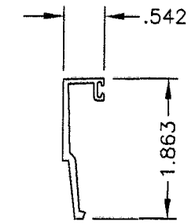

GAZING BEAD
DIE #101-002
MATERIAL: ALUMINUM
ALLOY: 6063-T6
TIPICAL WALL:.062

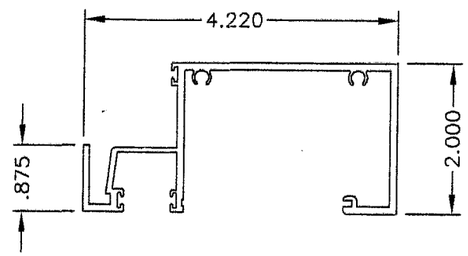

FRAME SILL DIE# 100-010
MATERIAL: ALUMINUM
ALLOY: 6063-T6
TIPICAL WALL: .094"

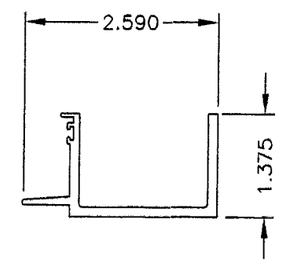

WATER BAR
DIE #101-010
MATERIAL: ALUMINUM
ALLOY: 6063-T6
TIPICAL WALL: .125"

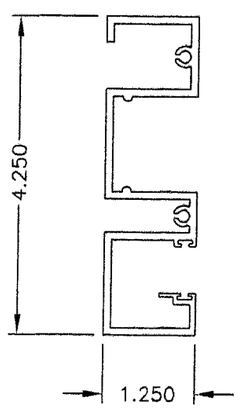

FRAME JAMB
DIE# 100-010
MATERIAL: ALUMINUM
ALLOY: 6063-T6
TIPICAL WALL: .100"

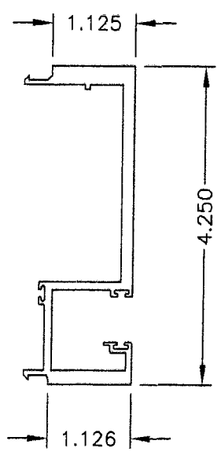

MALE VERT. MULLION
DIE# 100-004
MATERIAL: ALUMINUM
ALLOY: 6063-T6
TIPICAL WALL: .100"

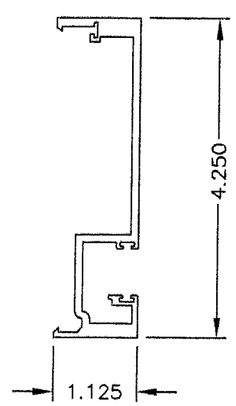

FEMALE VERT. MULLION
DIE# 100-005
MATERIAL: ALUMINUM
ALLOY: 6063-T6
TIPICAL WALL: .100"

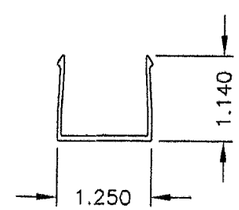

GLAZING BEAD
DIE# 100-007
MATERIAL: ALUMINUM
ALLOY: 6063-T6
TIPICAL WALL: .050"

PRODUCT REVISED
as complying with the Florida Building Code
Acceptance No 06-1128.06
Expiration Date DEC. 7, 2008
By Maria Perez
Miami Dade Product Control Division

XCEL ENGINEERING CORP.
7785 NW 56 Street.
Miami, Fl 33166
(305) 772 5023
CAN (EB) 9324

JAN 22 2008

Sifang Zhao Fla PE# 50685

Miami Wall Systems, Inc.
701 West 25th street
Hialeah, Florida. 33010
Phone:(305) 888-2300 Fax:(305) 888-3058

WINDOW WALL SERIES 101

BILL OF MATERIAL
EXTRUSION SUMMARY

revisions:

no	date	by	description
1	11/13/06	JV	UPDATE TO 2004 BUILDING CODE

date: 1/6/03
scale: HALF
design by: L.G.
drawn by: L.G.
checked by: P.V.

drawing no.
MWS-101-N

sheet 5 of 6

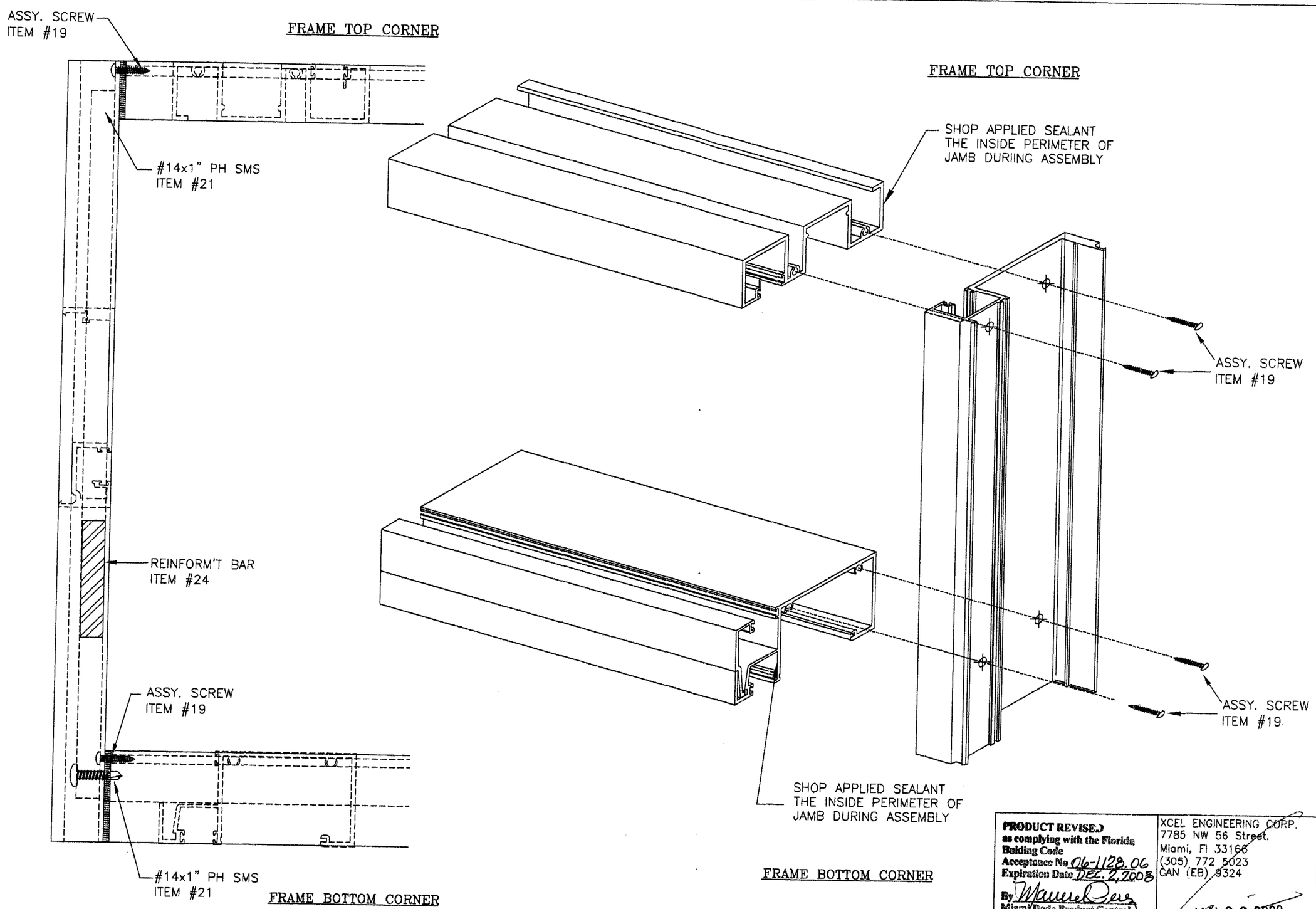

PRODUCT REVISED
as complying with the Florida Building Code
Acceptance No 06-1128.06
Expiration Date DEC. 2, 2008
By Manuel Perez
Miami-Dade Product Control Division

XCEL ENGINEERING CORP.
7785 NW 56 Street.
Miami, Fl 33166
(305) 772 5023
CAN (EB) 8324

JAN 22 2008

Sifang Zhao Fla PE# 50685

Miami Wall Systems, Inc.
701 West 25th street
Hialeah, Florida. 33010
Phone:(305) 888-2300 Fax:(305) 888-3058

WINDOW WALL SERIES 101

CORNER DETAIL

revisions:

no	date	by	description
1	11/13/06	JV	UPDATE TO 2004 BUILDING CODE

date: 1/6/03
scale: HALF
design by: L.G.
drawn by: L.G.
checked by: P.V.

drawing no.
MWS-101-N

sheet 6 of 6