MIAMI-DADE COUNTY

BUILDING CODE COMPLIANCE OFFICE (BCCO)
PRODUCT CONTROL DIVISION

MIAMI-DADE COUNTY, FLORIDA
METRO-DADE FLAGLER BUILDING
140 WEST FLAGLER STREET, SUITE 1603
MIAMI, FLORIDA 33130-1563
(305) 375-2901 FAX (305) 375-2908
www.buildingcodeonline.com

NOTICE OF ACCEPTANCE (NOA)

Arch Aluminum & Glass Company, Inc.
10200 NW 67th Street
Tamarac, FL 33321

SCOPE:

This NOA is being issued under the applicable rules and regulations governing the use of construction materials. The documentation submitted has been reviewed by Miami-Dade County Product Control Division and accepted by the Board of Rules and Appeals (BORA) to be used in Miami Dade County and other areas where allowed by the Authority Having Jurisdiction (AHJ).

This NOA shall not be valid after the expiration date stated below. The Miami-Dade County Product Control Division (In Miami Dade County) and/or the AHJ (in areas other than Miami Dade County) reserve the right to have this product or material tested for quality assurance purposes. If this product or material fails to perform in the accepted manner, the manufacturer will incur the expense of such testing and the AHJ may immediately revoke, modify, or suspend the use of such product or material within their jurisdiction. BORA reserves the right to revoke this acceptance, if it is determined by Miami-Dade County Product Control Division that this product or material fails to meet the requirements of the applicable building code.

This product is approved as described herein, and has been designed to comply with the Florida Building Code, including the High Velocity Hurricane Zone.

DESCRIPTION: Series "Wide Stile" Outswing Aluminum Entrance Door w/ Transom – N.I.

APPROVAL DOCUMENT: Drawing No. **05-318**, titled "NI Series Aluminum Wide Stile Outswing Door-Non Impact", sheets 1 through 9 of 9, dated 10/02/05 and last revised on Apr 18, 2006, prepared by EngCo Inc., signed and sealed by Pedro De Figueiredo, P.E., bearing the Miami-Dade County Product Control Renewal stamp with the Notice of Acceptance number and expiration date by the Miami-Dade County Product Control Division.

MISSILE IMPACT RATING: None: Approved Hurricane Protection Devices, complying w/ FBC are required

Limitation: 1. Option 1: The 3-point & 2-point multi ply lock system is manufactured by Adams Rite Mfg. Co.
2. Option 2: The 2-point 2086 Concealed Vertical Rod Panic exit device is manufactured by Jackson Co.
3. Storefront & curtain wall is not a part of this approval

LABELING: Each unit shall bear a permanent label with the manufacturer's name or logo, city, state and following statement: "Miami-Dade County Product Control Approved", unless otherwise noted herein.

RENEWAL of this NOA shall be considered after a renewal application has been filed and there has been no change in the applicable building code negatively affecting the performance of this product.

TERMINATION of this NOA will occur after the expiration date or if there has been a revision or change in the materials, use, and/or manufacture of the product or process. Misuse of this NOA as an endorsement of any product, for sales, advertising or any other purposes shall automatically terminate this NOA. Failure to comply with any section of this NOA shall be cause for termination and removal of NOA.

ADVERTISEMENT: The NOA number preceded by the words Miami-Dade County, Florida, and followed by the expiration date may be displayed in advertising literature. If any portion of the NOA is displayed, then it shall be done in its entirety.

INSPECTION: A copy of this entire NOA shall be provided to the user by the manufacturer or its distributors and shall be available for inspection at the job site at the request of the Building Official.

This NOA renews **NOA # 05-1012.06** and consists of this page 1 and evidence page E-1, as well as approval document mentioned above.

The submitted documentation was reviewed by **Ishaq I. Chanda, P.E.**

PRODUCT CONTROL ACCEPTED

1/30/17

Arch Aluminum & Glass Company, Inc.

NOTICE OF ACCEPTANCE: EVIDENCE SUBMITTED

A. DRAWINGS (transferred from file # 05-1012.06)

1. Manufacturer's die drawings and sections.
2. Drawing No. **05-318**, titled "NI Series Aluminum Wide Stile Outswing Door- Non Impact", sheets 1 through 9 of 9, dated 10/02/05 and last revised on Apr 18, 2006, prepared by EngCo Inc., signed and sealed by Pedro De Figueiredo, P.E.

B. TESTS (transferred from file # 05-1012.06) original test conducted per SFBC, PA 202-94 now known as TAS 202-94.

1. Test reports on 1) Air Infiltration Test, per FBC, TAS 202-94
   2) Uniform Static Air Pressure Test, Loading per FBC, TAS 202-94
   3) Water Resistance Test, per FBC, TAS 202-94 (Not performed)
   4) Forced Entry Test, per FBC 2411 3.2.1 and TAS 202-94

   Along with installation diagram of aluminum out-swinging impact entrance door with fixed light prepared by Fenestration Testing Laboratory, Inc., Test Report No. **FTL-1802**, dated 03/05/98, signed and sealed by Late Gilbert Diamond, P.E.
2. Additional Re-verification test for wide stiles doors per TAS 202-94: Test report No. FTL 5072 dated 10/16/2006, issued by Fenestration Testing Laboratory, Inc, signed and sealed by Edmundo Largaespada, P. E.

C. CALCULATIONS (transferred from file # 05-1012.06)

1. Anchor Calculations and structural analysis, complying with FBC-2004, prepared by EngCo Inc., dated Oct, 10, 2005, signed and sealed by Pedro De Figueiredo, P.E.
2. Glazing complies with ASTM E1300- 98 &-02

D. QUALITY ASSURANCE

1. Miami Dade Building Code Compliance Office (BCCO).

E. MATERIAL CERTIFICATIONS

1. None

F. STATEMENTS (transferred from file # 05-1012.06)

1. Statement letter of conformance and no financial interest, prepared by Engco Inc., dated 10/10/05, signed and sealed by Pedro DeFigueiredo, P.E.
2. Statement letter of compliance, part of above referenced test reports.

G. OTHER

1. This **renews** NOA **# 05-1012.06** expired December 31, 2007.
2. Test Proposal # **06-0273** approved by BCCO.
3. Previous associated files to this approval are NOA(s) # 01-0912.03 & 01-0226.05.

Ishaq I. Chanda

Ishaq I. Chanda, P.E.
Product Control Examiner
NOA No 06-1129.01
Expiration Date: December 31, 2011
Approval Date: February 21, 2007

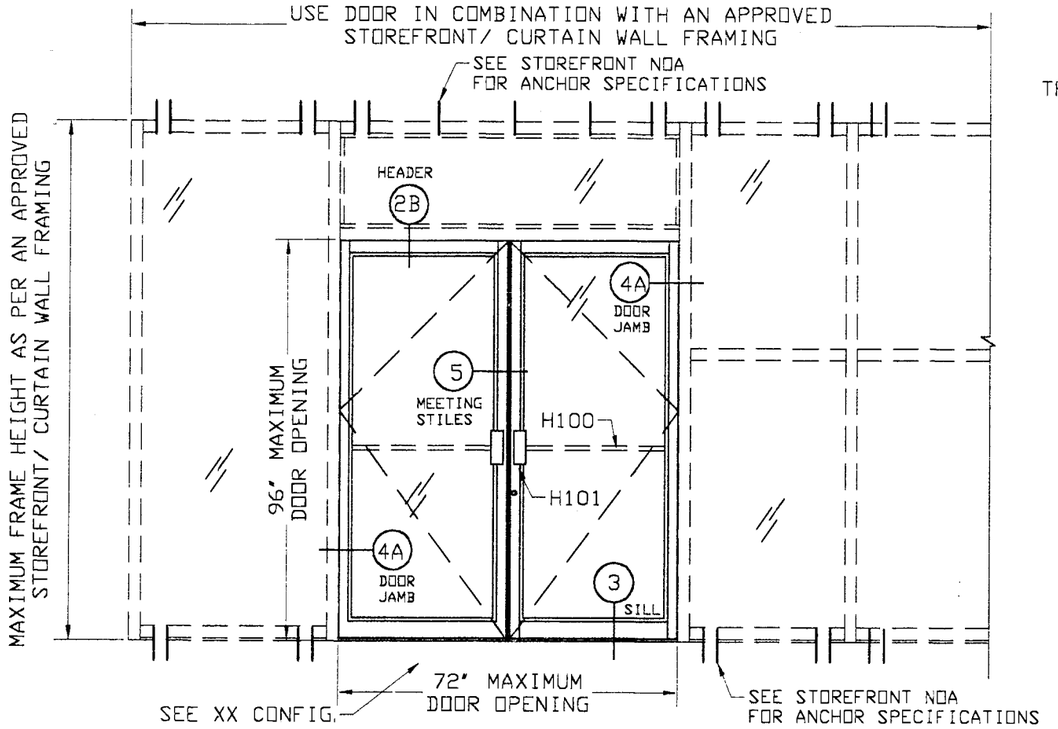

XX OR X DOOR IN COMBINATION WITH AN APPROVED STOREFRONT FRAMING

TYPICAL ELEVATIONS

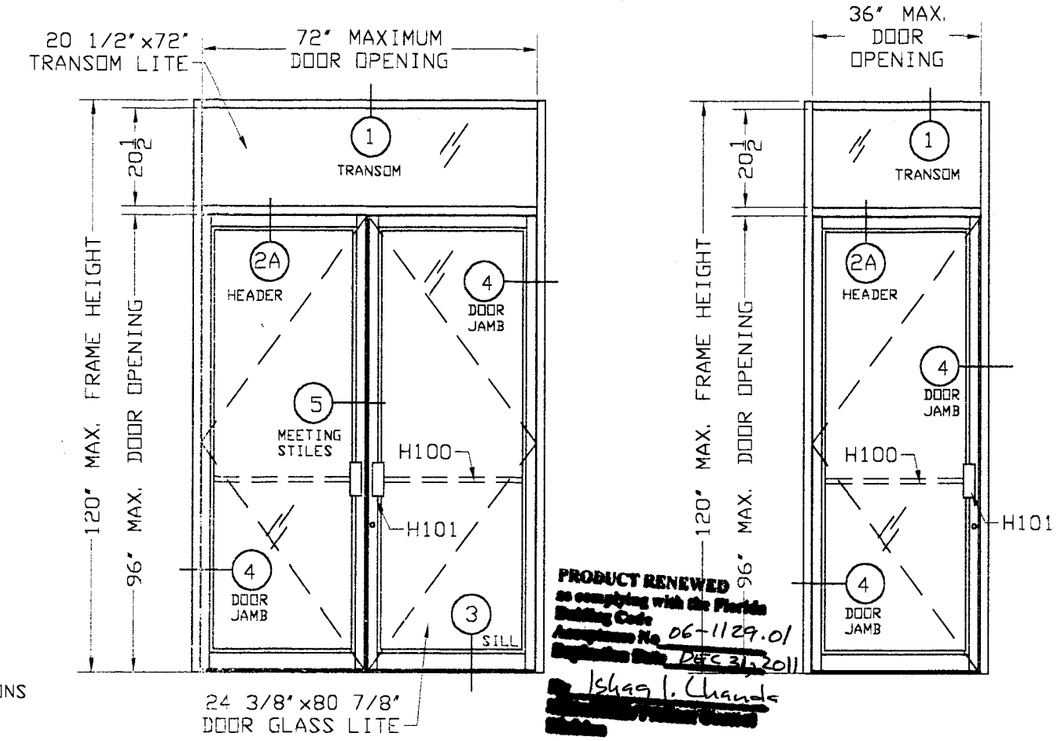

PRODUCT RENEWED as complying with the Florida Building Code Acceptance No. 06-1129.01 Expiration Date DEC 31, 2011 By Ishaq I. Chanda Miami-Dade Product Control Division

XX/O OR X/O - PAIR OR SINGLE DOOR WITH TRANSOM

GENERAL NOTES:

1- CODE: THIS PRODUCT HAS BEEN TESTED AND DESIGNED IN ACCORDANCE WITH THE FLORIDA BUILDING CODE 2004 EDITION - (INCLUDING HIGH VELOCITY SECTION)

2- DEFINITION: THIS PRODUCT IS A NON IMPACT ALUMINUM OUTSWING DOOR. - WIDE STILE MODEL

3- LIMITATIONS: 3.1- THE USE OF THIS PRODUCT IN WIND-BORNE DEBRIS REGION WILL REQUIRE APPROVED IMPACT RESISTANT HURRICANE SHUTTERS.

3.2- DOORS ARE NOT TO BE USED WHERE WATER INFILTRATION REQUIREMENTS MUST BE MET.

3.3- DESIGNED PRESSURES MUST NOT EXCEED THE ALLOWABLE DESIGN RATE ON TABLES 1 ON SHEET 2.

4- LABELING: EACH UNIT SHALL BEAR A PERMANENT LABEL WITH THE MANUFACTURER'S NAME OR LOGO, CITY, STATE AND THE FOLLOWING STATEMEMT: "MIAMI-DADE COUNTY PRODUCT CONTROL APPROVED"

5- DESIGN LOADS: LOADS MUST BE CALCULATED BY A PROFESSIONAL ARCHITECT OR ENGINEER FOR EACH SPECIFIC PROJECT.

6- MATERIAL: ALL ALUMINUM PARTS TO BE 6063-T5 OR AS INDICATED AND GLAZING TO BE 1/4" TEMPERED GLASS AS SPECIFIED ON THIS APPROVAL.

7- FASTENERS: ASSEMBLY SCREWS AND ANCHORS SHALL BE AS SPECIFIED IN THIS CURRENT SET OF DRAWINGS.

8- USE: IT SHALL BE THE RESPONSIBILITY OF THE CONTRACTOR, ARCHITECT OR ENGINEER OF RECORD TO VERIFY THE FOLLOWING:

8.1- THE STABILITY OF THE STRUCTURE WHERE THE UNIT IS TO BE ATTACHED INSURING PROPER ANCHORAGE.

8.2- THE SITE SPECIFIC PROJECT CRITERIA, SUCH AS BUT NOT LIMITED TO, LOCAL CODE REQUIREMENTS, DESIGNED PRESSURES ETC.

8.3- THAT THIS APPROVAL IS ADEQUATE TO THE SPECIFIC PROJECT.

9- 33 1/3% INCREASE IN ALLOWABLE LOADS HAVE NOT BEEN USED IN THE DESIGN OF THE ANCHORS FOR THIS PRODUCT APPROVAL, HOWEVER, WOOD ANCHORS WITH 1.33 INCREASE FOR WIND LOAD DURATION HAVE BEEN USED.

USER INSTRUCTIONS:

1- DETERMINE PROJECT DESIGN WIND LOAD PRESSURES (Pd) AS PER ITEM 5 OF GENERAL NOTES, SHEET 1.

2- VERIFY IF MAXIMUM DOOR ALLOWABLE PRESSURE AS PER TABLE 1 ON SHEET 2 IS GREATER THAN Pd.

3- INCORPORATE A VALID NOTICE OF ACCEPTANCE FOR THE FRAMING WHEN DOORS ARE TO BE PART OF A STOREFRONT OR CURTAIN WALL ELEVATION.

ILLUSTRATION "Z"

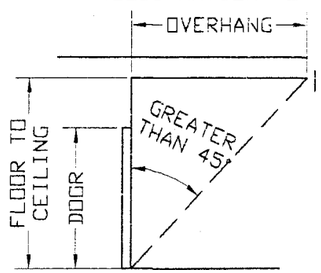

NOTES:

1- UNITS MUST BE INSTALLED AT LOCATIONS PROTECTED BY A OVERHANG MEETING CRITERIA AS PER ILLUSTRATION "Z" OR IN NON-HABITABLE AREAS WHERE WATER INFILTRATION IS ACCEPTABLE.

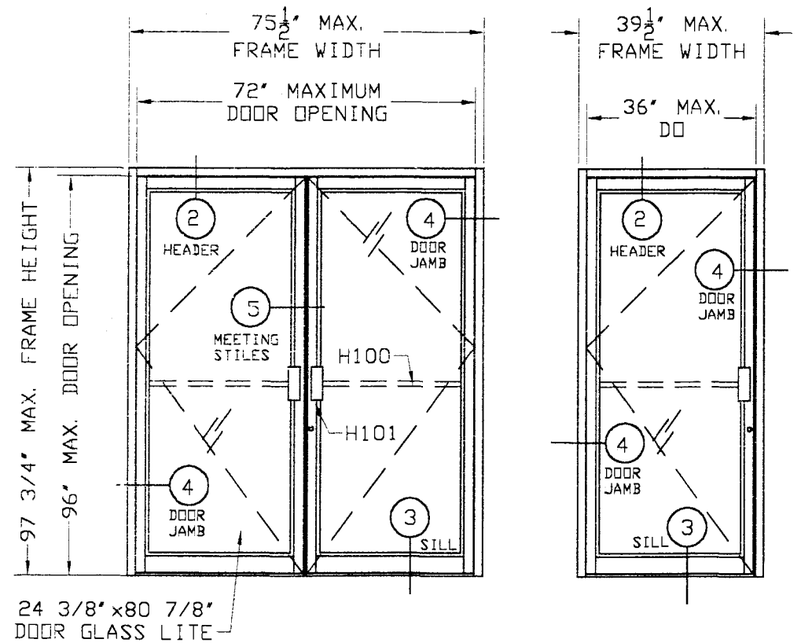

XX OR X - PAIR OR SINGLE DOOR

MANUFACTURER:
Arch Aluminum & Glass Co. Inc.
10200 NW 67TH STREET
TAMARAC - FL - 33321
TEL: (800) 432-8132
FAX: (954) 724-9293

PRODUCT:
NI SERIES
ALUMINUM
WIDE STILE
OUTSWING DOOR
NON IMPACT

Engineering:
EngCo Inc.
CA 8116
6971 W. Sunrise Blvd. 104
Plantation, Fl. 33313
Tel.: (954) 585-0304
Fax: (954) 585-0305

APR 18 2006
Engineer Seal
Pedro De Figueiredo
PE 52609

Date: 10/02/05
Scale: NA
Design by: PPMF

PRODUCT CONTROL DIVISION:
PRODUCT REVISED as complying with the Florida Building Code Acceptance No. 05-1012.06 Expiration Date 12/31/07 By Miami-Dade Product Control Division

Drawing Number
05-318

Sheet
1 OF 9

TABLE 1 – ALLOWABLE DESIGNED PRESSURES

DOOR WIDTH (IN)	DOOR HEIGHT (IN)	TRANSOM HEIGHT (IN)	ALLOWBLE PRESSURE (±) OPTION 1 (PSF)	OPTION 2 (PSF)	OPTION 3 (PSF)
60' PAIR 30' SINGLE	80	0	122.4	100.8	78.2
		18	122.4	100.8	78.2
		24	114.8	94.5	78.2
		30	104.9	86.4	78.2
		36	96.6	79.6	76.5
	84	0	116.6	96.0	74.5
		18	116.6	96.0	74.5
		24	111.3	91.6	74.5
		30	102.0	84.0	74.5
		36	94.2	77.5	74.5
	96	0	102.0	84.0	–
		18	102.0	84.0	–
		24	102.0	84.0	–
		30	94.2	77.5	–
		36	87.4	72.0	–
PAIR 72' SINGLE 36'	80	0	102.0	84.0	65.2
		18	102.0	84.0	65.2
		24	95.6	78.8	65.2
		30	87.4	72.0	65.2
		36	80.5	66.3	63.7
	84	0	97.1	80.0	62.1
		18	97.1	80.0	62.1
		24	92.7	76.4	62.1
		30	85.0	70.0	62.1
		36	78.5	64.6	62.1
	96	0	85.0	70.0	–
		18	85.0	70.0	–
		24	85.0	70.0	–
PAIR 84' SINGLE 42'	80	0	87.4	72.0	–
		18	56.4	46.4	–
		21	54.4	44.8	–
	84	0	83.3	68.6	–
		18	54.3	44.7	–

NOTES:
1- DOOR WIDTH AND HEIGHT ON TABLE 1 ARE OPENINGS DIMENSIONS.
2- SEE HARDWARE SCHEDULE FOR ALLOWABLE PRESSURE OPTIONS
3- PRESSURES ARE POSITIVE AND NEGATIVE.

APPROVED CONFIGURATIONS

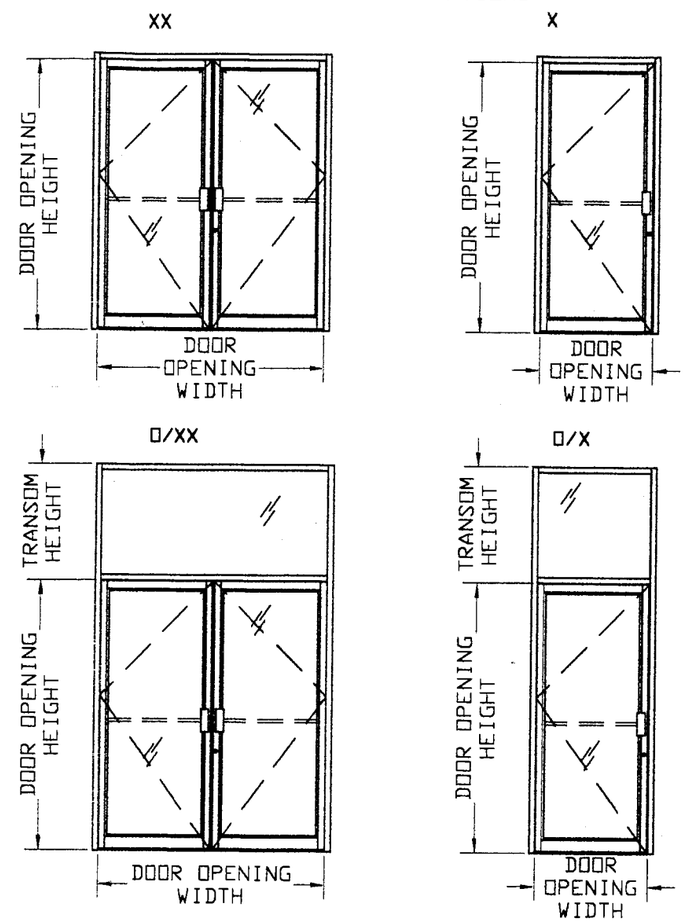

HARDWARE OPTIONS:

	TYPE	LOCATION	DESCRIPTION	ITEM NUMBER	ALLOWABLE PRESSURE (PSF)
HINGES PIVOTS	1	HINGE STILES	ALUMINUM ROTON HINGE	H40	TABLE 1 OPTION 1
	2		TOP, MID & BOTTOM PIVOTS	H30 & H31	
	3		4 1/2" BRASS BUTT HINGES	H20	
	4		TOP & BOTTOM PIVOTS	H30	TABLE 1 OPTION 3
LOCKS	5	ACTIVE STILE	3 POINT LOCK KEY OPERATED FROM EXTERIOR AND THUMB TURN ON INTERIOR	L13	TABLE 1 OPTION 1
	6	ACTIVE STILE	1 POINT LOCK KEY OPERATED FROM EXTERIOR AND THUMB TURN ON INTERIOR	L11	TABLE 1 OPTION 3
	7	INACTIVE STILE	TWO MANUALLY OPERATED FLUSH BOLTS	L12	TABLE 1 OPTION 3
	8	INACTIVE STILE	2 POINT LOCK OPERATED ON INTERIOR WITH THUMB TURN	L14	TABLE 1 OPTION 1
PANIC DEVICES	9	ACTIVE INACTIVE STILES	2 POINT LOCK OPERATED ON INTERIOR W/ 2086 DEVICE AND KEY ON EXTERIOR	L10	TABLE 1 OPTION 2

PRODUCT RENEWED
as complying with the Florida Building Code
Acceptance No 06-1129.01
Expiration Date DEC 31, 2011
By Shas I. Chanda
Miami-Dade Product Control Division

MANUFACTURER:
Arch Aluminum & Glass Co. Inc.
10200 NW 67TH STREET
TAMARAC - FL - 33321
TEL: (800) 432-8132
FAX: (954) 724-9293

PRODUCT:
NI SERIES
ALUMINUM
WIDE STILE
OUTSWING DOOR
NON IMPACT

Engineering:
EngCo Inc.
CA 8116
6971 W. Sunrise Blvd. 104
Plantation, Fl. 33313
Tel.: (954) 585-0304
Fax: (954) 585-0305

APR 1 8 2006
Engineer Seal
Pedro De Figueiredo
PE 52609

Date: 10/02/05
Scale: NA
Design by: PPMF

PRODUCT CONTROL DIVISION:
PRODUCT REVISED
as complying with the Florida Building Code
Acceptance No 05-1012.06
Expiration Date 12/31/07
By
Miami-Dade Product Control Division

Drawing Number
05-318

GLAZING DETAILS

TYPICAL TRANSOM

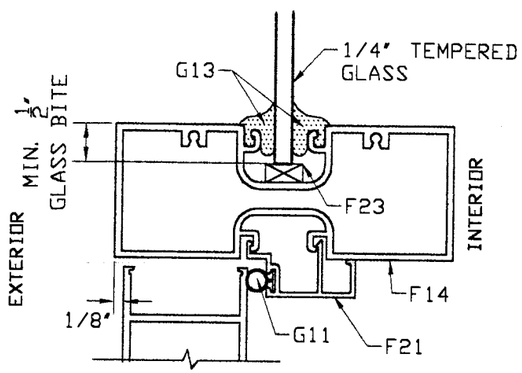

DOOR VERTICAL STILES

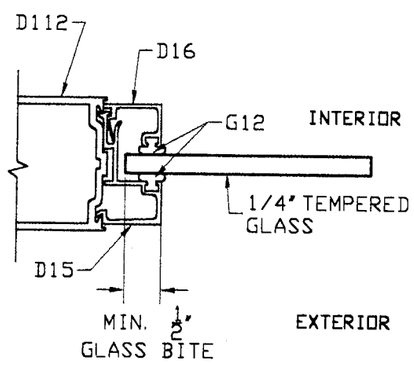

DOOR TOP & BOTTOM RAILS

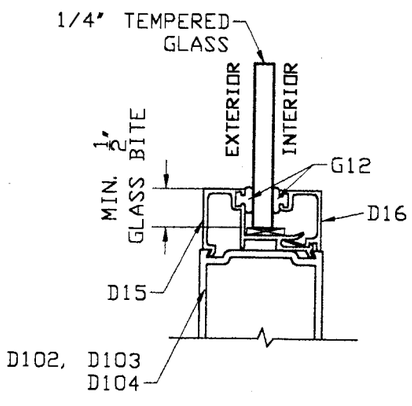

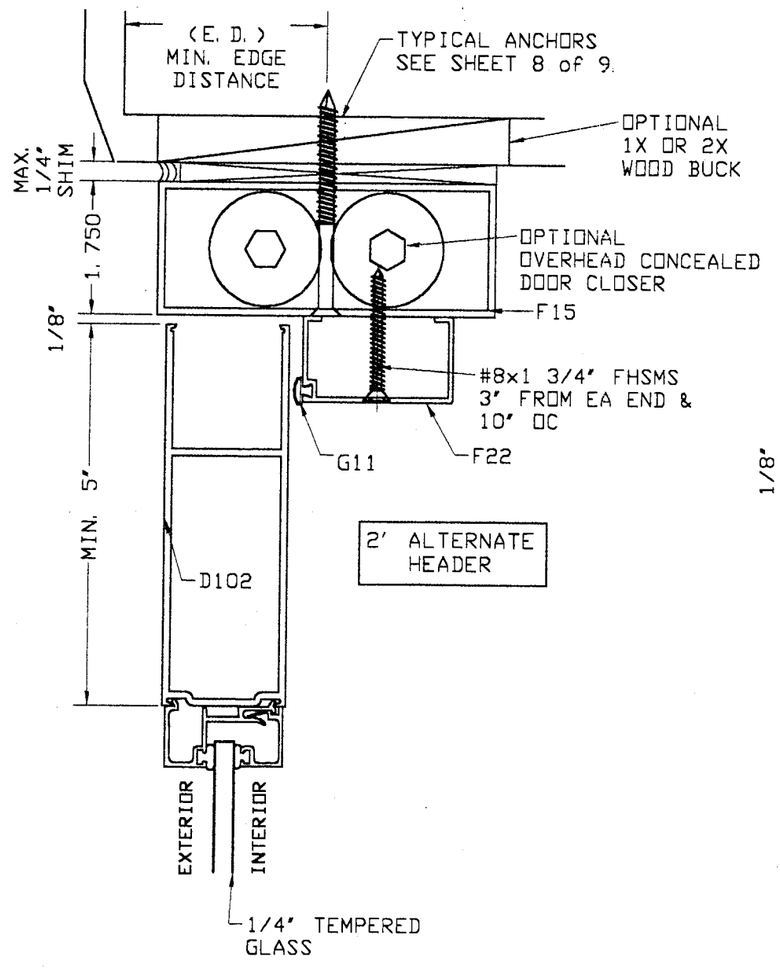

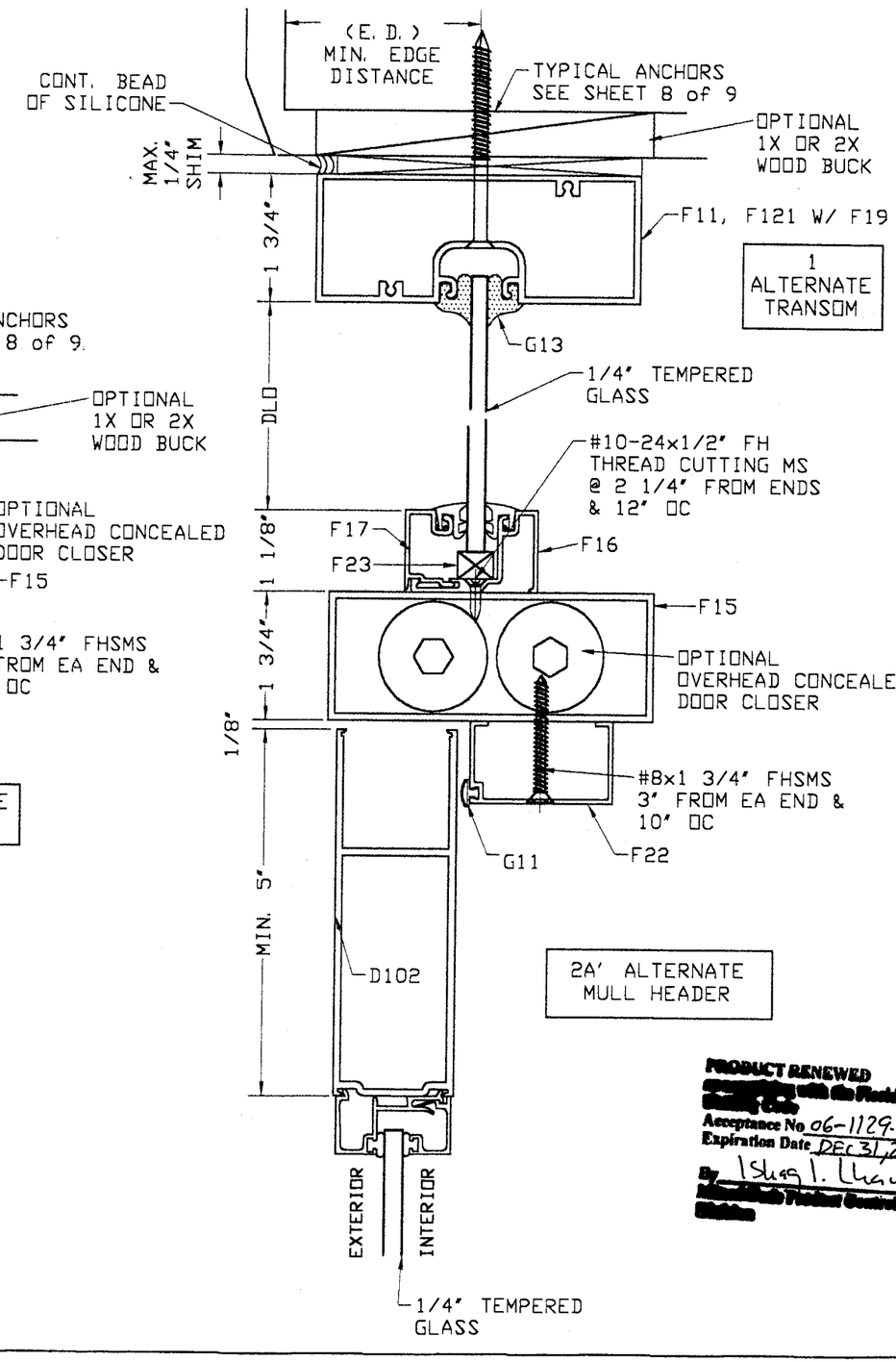

PRODUCT RENEWED
[redacted] with the Florida [redacted] Code
Acceptance No. 06-1129.01
Expiration Date DEC 31, 2011
By [redacted]

MANUFACTURER:
Arch Aluminum & Glass Co. Inc.
10200 NW 67TH STREET
TAMARAC - FL - 33321
TEL: (800) 432-8132
FAX: (954) 724-9293

PRODUCT:
NI SERIES
ALUMINUM
WIDE STILE
OUTSWING DOOR
NON IMPACT

Engineering:
EngCo Inc.
CA 8116
6971 W. Sunrise Blvd. 104
Plantation, Fl. 33313
Tel.: (954) 585-0304
Fax: (954) 585-0305

APR 18 2006

Engineer Seal
Pedro De Figueiredo
PE 52609

Date: 10/02/05
Scale: NA
Design by: PPMF

PRODUCT CONTROL DIVISION:

PRODUCT REVISED
as complying with the Florida Building Code
Acceptance No. 05-1012.06
Expiration Date 12/31/07
By
Miami-Dade Product Control Division

Drawing Number
05-318

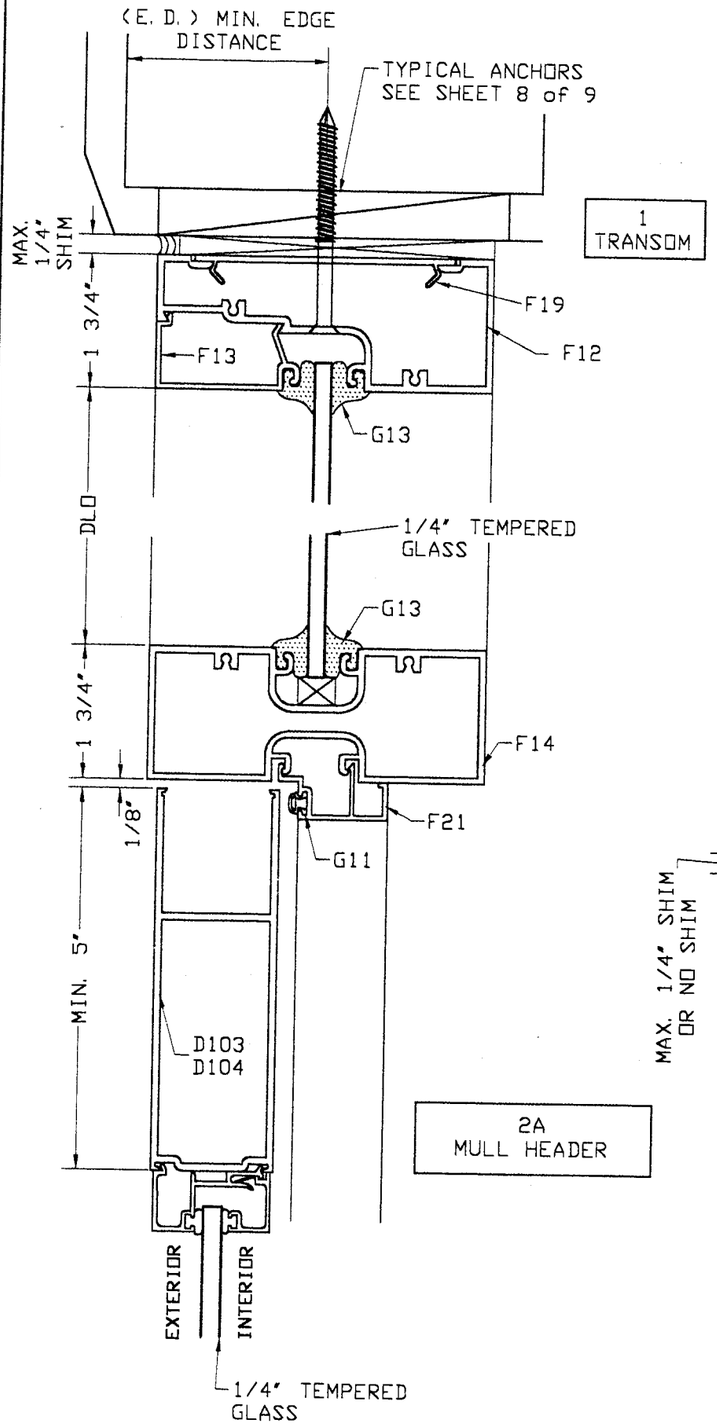

1
TRANSOM

2A
MULL HEADER

TYPICAL ANCHORS
A- #14 SS WOOD SCREWS OR 1/4" TAPCONS W/ 1 1/2" EMBED. INTO WOOD (SG=.55)
B- 1/4" TAPCONS W/ 1 1/4" EMBED. INTO MASONRY
C- 1/4-14 SELF DRILLING SCREWS INTO METAL STRUCTURES (1/8" MIN. 6063-T5 ALUMINUM OR ASTM A36 STEEL)

E. D. = 1" FOR WOOD
E. D. = 3" FOR CONCRETE
E. D. = 3/4" FOR METAL

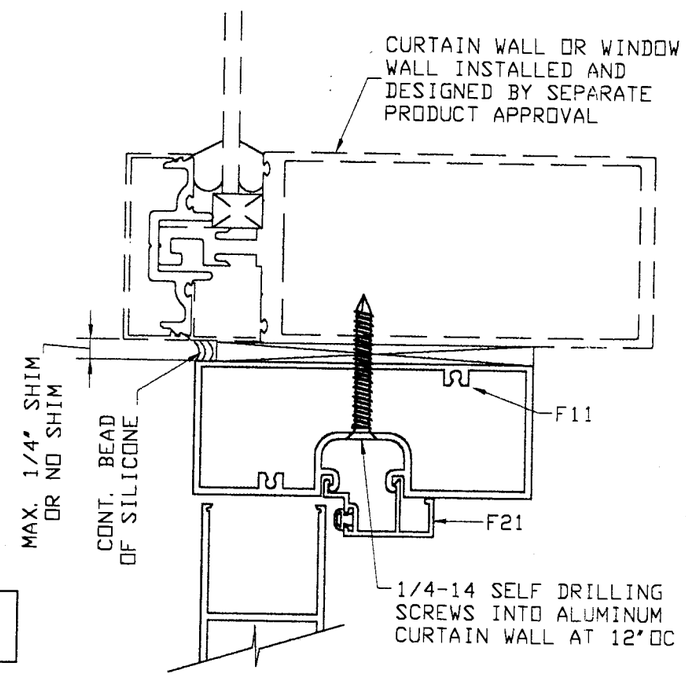

2B
ALTERNATE
HEADER

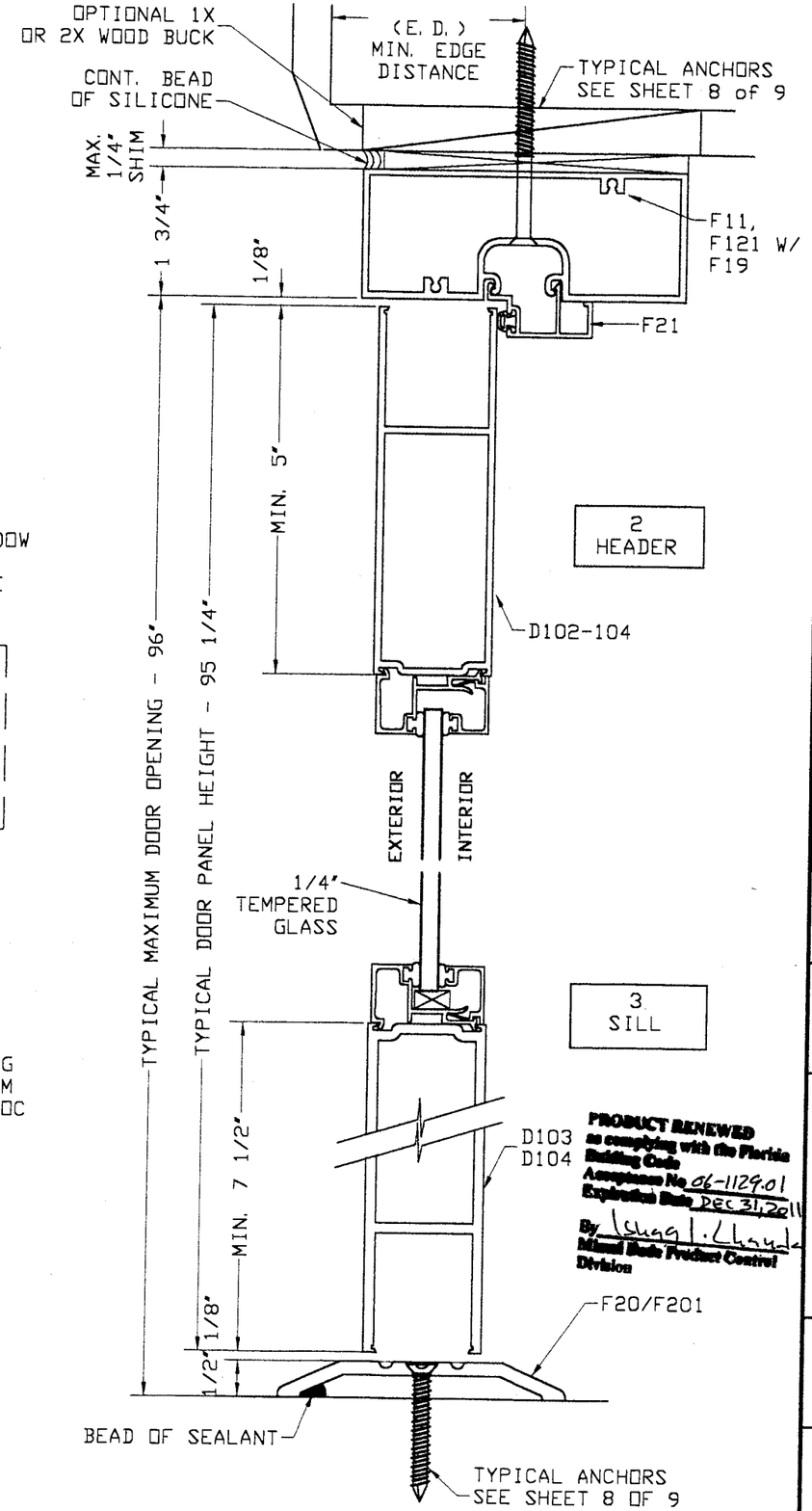

2
HEADER

3
SILL

PRODUCT RENEWED
as complying with the Florida Building Code
Acceptance No. 06-1129.01
Expiration Date DEC 31, 2011
By
Miami-Dade Product Control Division

PRODUCT REVISED
as complying with the Florida Building Code
Acceptance No. 05-1012.06
Expiration Date 12/31/07
By
Miami-Dade Product Control Division

MANUFACTURER:
Arch Aluminum & Glass Co. Inc.
10200 NW 67TH STREET
TAMARAC - FL - 33321
TEL: (800) 432-8132
FAX: (954) 724-9293

PRODUCT:
NI SERIES
ALUMINUM
WIDE STILE
OUTSWING DOOR
NON IMPACT

Engineering:
EngCo Inc.
CA 8116
6971 W. Sunrise Blvd. 104
Plantation, Fl. 33313
Tel.: (954) 585-0304
Fax: (954) 585-0305

APR 18 2006

Engineer Seal
Pedro De Figueiredo
PE 52609

Date: 10/02/05
Scale: NA
Design by: PPMF

PRODUCT CONTROL DIVISION:

Drawing Number
05-318

TYPICAL ANCHORS
A- #14 SS WOOD SCREWS OR 1/4" TAPCONS W/ 1 1/2" EMBED. INTO WOOD (SG=.55)
B- 1/4" TAPCONS W/ 1 1/4" EMBED. INTO MASONRY
C- 1/4-14 SELF DRILLING SCREWS INTO METAL STRUCTURES (1/8" MIN. 6063-T5 ALUMINUM OR ASTM A36 STEEL)

E. D. = 1" FOR WOOD
E. D. = 3" FOR CONCRETE
E. D. = 3/4" FOR METAL

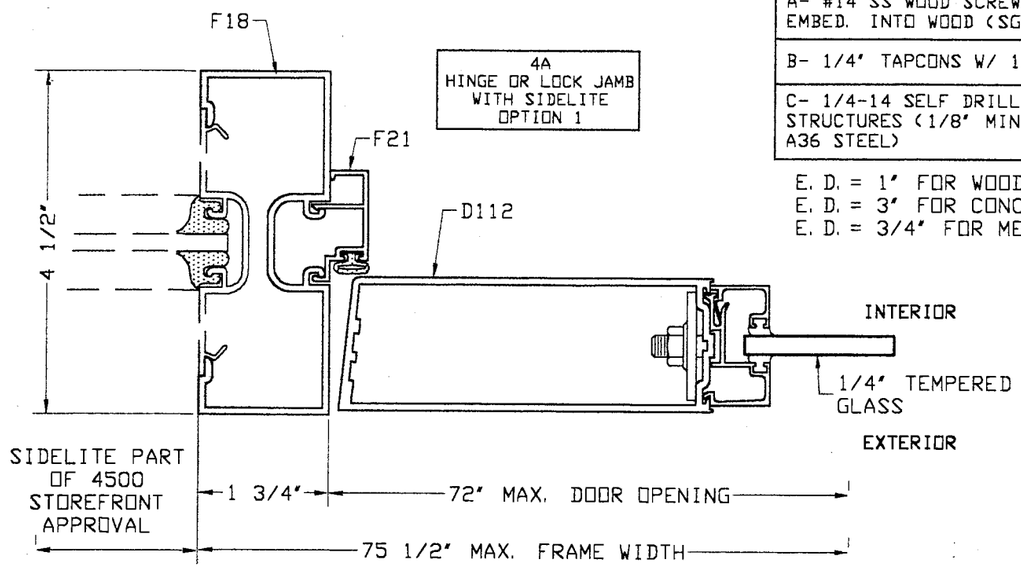

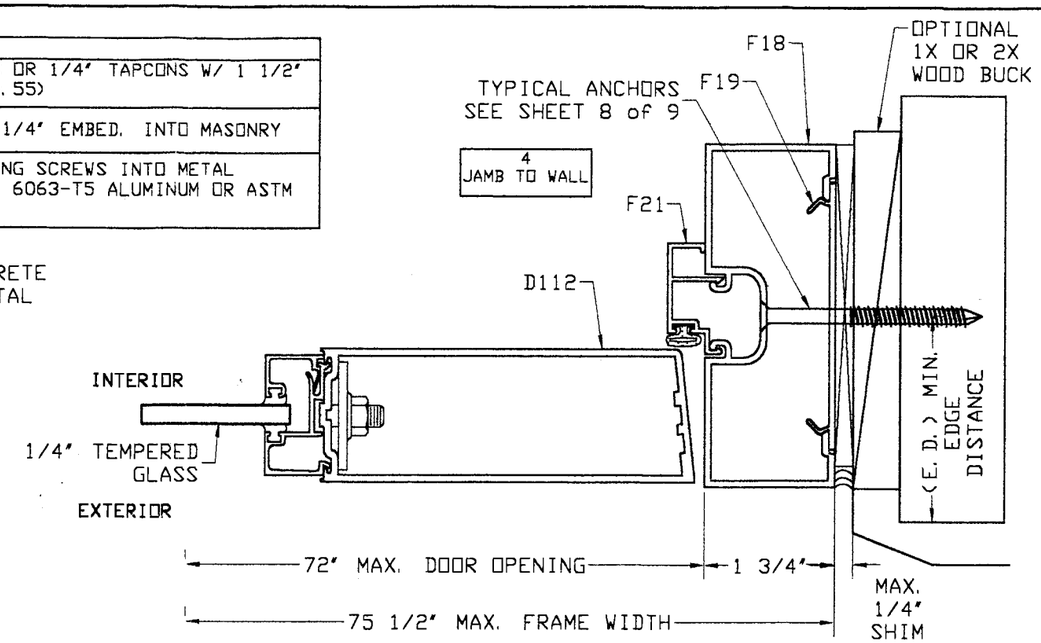

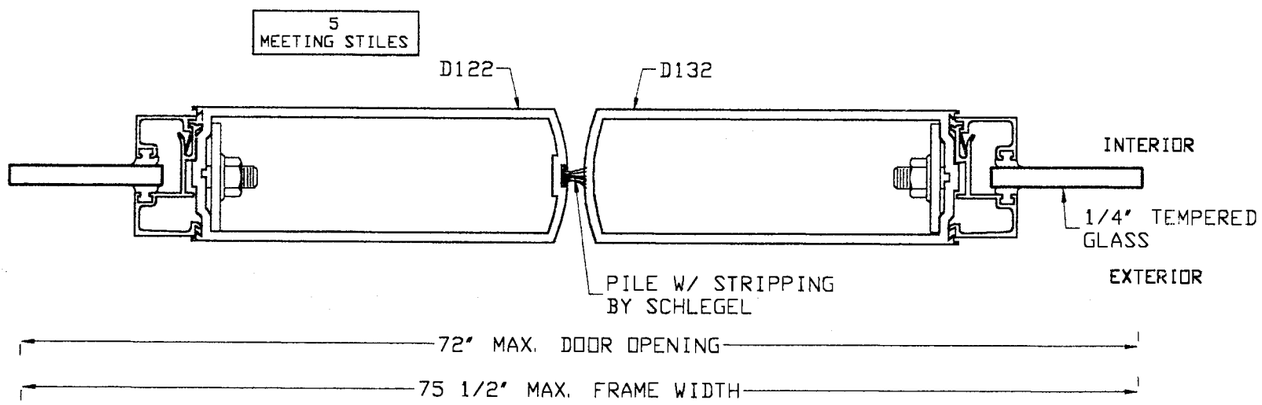

CURTAIN WALL OR WINDOW WALL INSTALLED AND DESIGNED BY SEPARATE PRODUCT APPROVAL

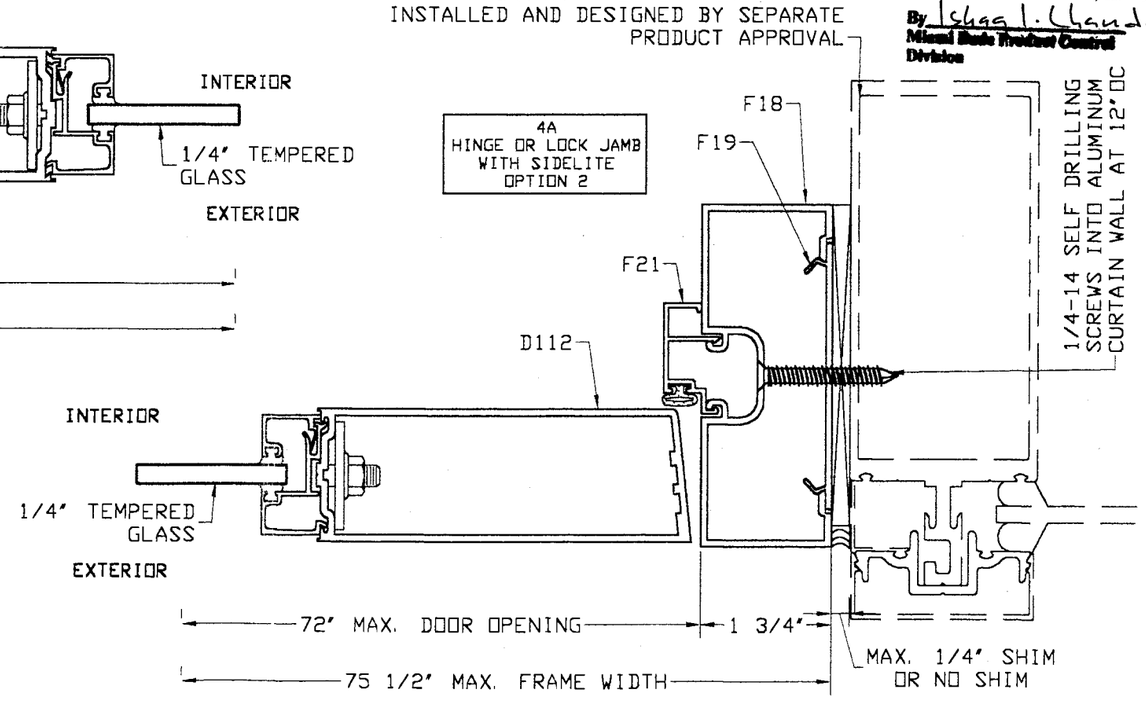

PRODUCT RENEWED
as complying with the Florida Building Code
Acceptance No. 06-1129.01
Expiration Date DEC 31, 2011
By Ishaq I. Chanda
Miami Dade Product Control Division

MANUFACTURER:
Arch Aluminum & Glass Co. Inc.
10200 NW 67TH STREET
TAMARAC - FL - 33321
TEL: (800) 432-8132
FAX: (954) 724-9293

PRODUCT:
NI SERIES ALUMINUM WIDE STILE OUTSWING DOOR NON IMPACT

Engineering:
EngCo Inc.
CA 8116
6971 W. Sunrise Blvd. 104
Plantation, Fl. 33313
Tel.: (954) 585-0304
Fax: (954) 585-0305

APR 1 8 2006
Engineer Seal
Pedro De Figueiredo
PE 52609

Date: 10/02/05
Scale: NA
Design by: PPMF

PRODUCT CONTROL DIVISION:

PRODUCT REVISED
as complying with the Florida Building Code
Acceptance No. 05-1012.06
Expiration Date 12/31/07
By
Miami Dade Product Control Division

Drawing Number
05-318

Sheet
5 OF 9

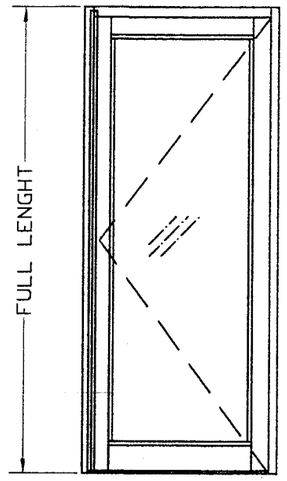

HINGE OPTIONS

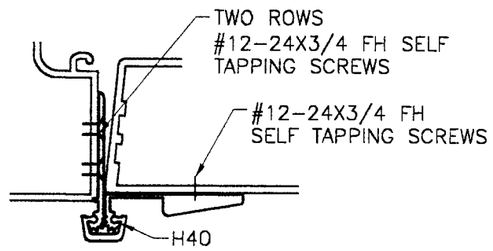

CONTINUOUS ALUMINUM ROTON HINGE
HAGER 780-112
FASTENED TO FRAME AND DOOR STILE WITH:
(25) TOTAL SCREWS ON 80 & 84" DOORS

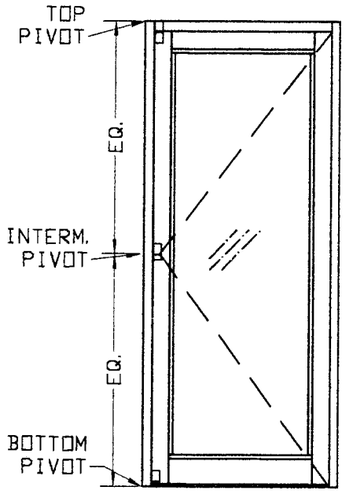

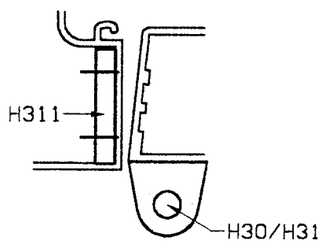

OFFSET PIVOT HINGES
OFFSET CAST ALUMINUM PIVOT HINGES
INTERNATIONAL H26 (TOP & BOTTOM)
INTERNATIONAL H14 (MIDSPAN)

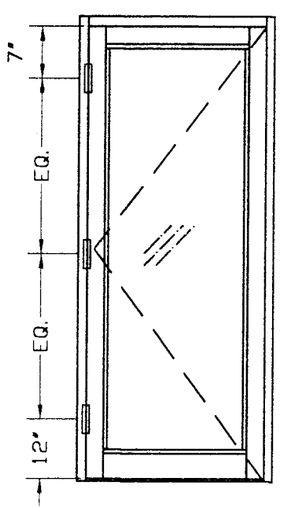

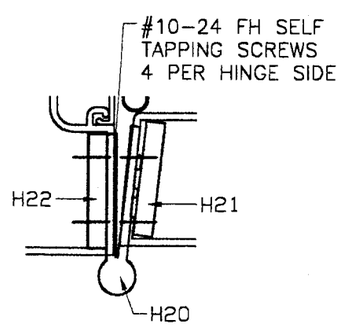

4 1/2" BRASS BUTT HINGES
HAGER BB-1191
12" FROM CL TO BOTTOM OF DOOR
7" FROM CL TO TOP OF DOOR
ONE AT MIDSPAN

BILL OF MATERIALS

ITEM #	PART #	DESCRIPTION	MATERIAL/REMARKS
D100	-----	----------	-------
D101	-----	----------	-------
D102	AGA-152	5" TOP RAIL	6063-T5
D103	AGA-69	7 1/2" TOP/BOTTOM RAIL	6063-T5
D104	AGA-1007	10" TOP/BOTTOM RAIL	6063-T5
D110	-------	----------	-------
D111	-------	----------	-------
D112	AGA-108	5" HINGE STILE	6063-T5
D120	-------	----------	-------
D121	-------	----------	-------
D122	AGA-151	5" ACTIVE STILE	6063-T5
D130	-------	----------	-------
D131	-------	----------	-------
D132	AGA-110	5" INACTIVE STILE	6063-T5
D15	AGA-113	SASH	6063-T5
D16	AGA-114	SASH BEAD	6063-T5
D17	TR 36	3/8"-16 THRU BOLT WITH NUTS	STEEL
D18	S-PILE	SCHLEGEL WEATHER STRIP	PILE
G12	H-64	GASKET	NEOPRENE
F11	4506	CLOSED BACK HEADER	6063-T5
F12	4502	CHAIR RAIL	6063-T6
F121	4501	OPEN BACK HEADER	6063-T5
F13	4503	GLASS STOP	6063-T5
F14	4505	MULLION	6063-T6
F15	1012	1 3/4 X 4 1/2" TUBE HEADER	6063-T6
F16	1051	APPLIED SASH	6063-T5
F17	1051A	SASH GLASS STOP	6063-T5
F18	4500	OPEN BACK JAMB	6063-T5
F19	4008	FLAT FILLER 3" LONG	6063-T5
F20	1040	4" SADDLE THRESHOLD	6063-T5
F201	2005A	4" BUMPER THRESHOLD	6063-T5
F21	4510	DOOR STOP	6063-T5
F22	AGA-95	APPLIED DOOR STOP	6063-T5
G13	H-63	WEDGE-IN GASKET	NEOPRENE
G11	H-65	DOOR WEATHERSTRIP	NEOPRENE
F23	H-62A	SETTING BLOCKS AT 1/4 POINTS	NEOPRENE
H100	1061	PUSH BAR (OPTIONAL)	6063-T5
H101	AR800	HANDLE (OPTIONAL)	6063-T6
H20	BB1191	HINGES HAGER 4 1/2 X 4	BRASS
H21	H-15-AD	HINGE BACK-UP PLATE	STEEL
H22	H-15-AF	HINGE BACK-UP PLATE	STEEL
H30	H26	TOP & BOTTOM OFFSET PIVOT	ALUMINUM
H31	H14	INTERMEDIATE PIVOT	ALUMINUM
H311		1/8"- 1"x 8 3/4" BAR AT INTERMEDIATE PIVOT	STEEL
H40	780-112	HAGER ROTON HINGE	ALUMINUM
L10	H75	2 POINTS LOCK W/PANIC PANIC TOUCH BAR 2086	JACKSON
L11	MS1850	ONE POINT LOCK KEY/ THUMB TURN	ADAMS RITE
L12	6300	TOP & BOTTOM FLUSH BOLTS	REFLECTOLITE
L121	-	FLUSH BOLT GUIDE	
L13	4015-4016	3 POINTS LOCK W/ KEY & THUMB TURN	ADAMS RITE
L14	1880	2 POINTS LOCK OPERATED ON INTERIOR WITH THUMB TURN	ADAMS RITE

PRODUCT RENEWED
as complying with the Florida Building Code
Acceptance No. 06-1129.01
Expiration Date DEC 31, 2011
By Ishwar L. Chandra
Miami Dade Product Control Division

MANUFACTURER:
Arch Aluminum & Glass Co. Inc.
10200 NW 67TH STREET
TAMARAC - FL - 33321
TEL: (800) 432-8132
FAX: (954) 724-9293

PRODUCT:
NI SERIES
ALUMINUM
WIDE STILE
OUTSWING DOOR
NON IMPACT

Engineering:
EngCo Inc.
CA 8116
6971 W. Sunrise Blvd. 104
Plantation, Fl. 33313
Tel.: (954) 585-0304
Fax: (954) 585-0305

APR 18 2006
Engineer Seal
Pedro De Figueiredo
PE 52609

Date: 10/02/05
Scale: NA
Design by: PPMF

PRODUCT CONTROL DIVISION:
PRODUCT REVISED
as complying with the Florida Building Code
Acceptance No. 05-1012.06
Expiration Date 12/31/07
By
Miami Dade Product Control Division

Drawing Number
05-318

WEATHERSTRIP COMPONENTS

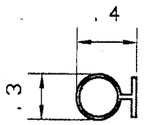

G11- DOOR STOP WEATHERSTRIP NEOPRENE H-65

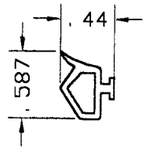

G12 DOOR GLAZING GASKET NEOPRENE H-64

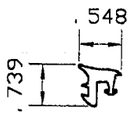

G13 FRAMING WEDGE IN GASKET NEOPRENE H-63

DOOR COMPONENTS

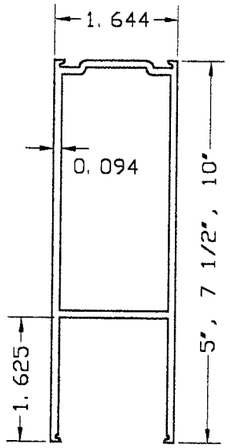

D102- TOP RAIL

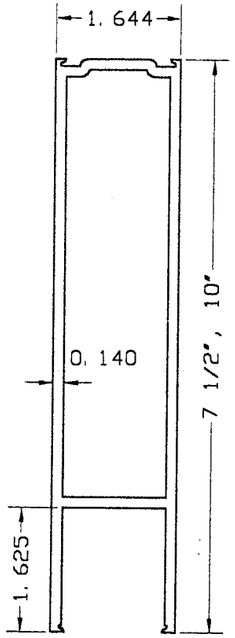

103, 104 BOTTOM/TOP RAIL

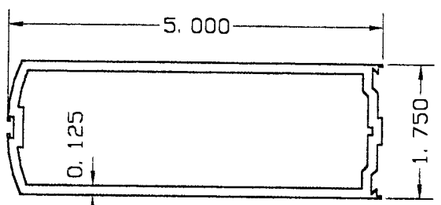

D122- ACTIVE STILE

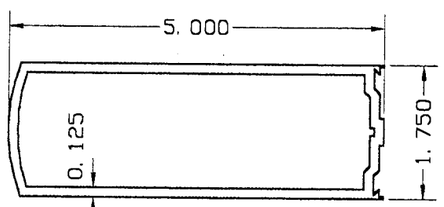

D132- INACTIVE STILE

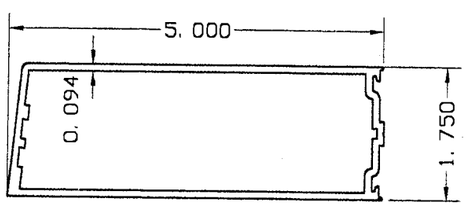

D112- HINGE STILE

NOTE: ALL ALUMINUM COMPONENTS MADE OF 6063-T5 ALLOY EXCEPT AS NOTED

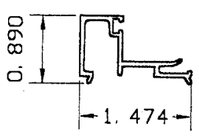

D15- EXTERIOR GLASS STOP AGA-113

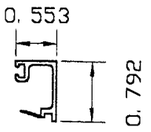

D16- INTERIOR GLASS STOP AGA-114

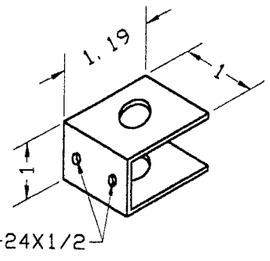

L121 FLUSH BOLT GUIDE STAINLESS STEEL

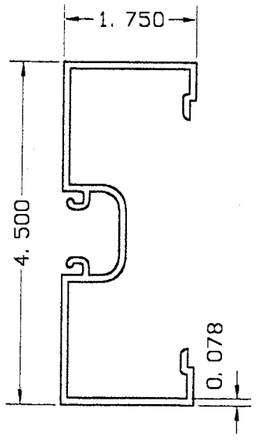

F18- OPEN BACK JAMB 4500

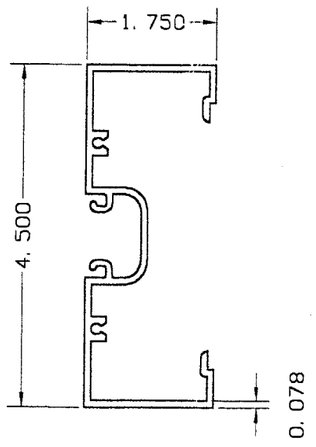

F121- OPEN BACK HEADER 4501

FRAMING COMPONENTS

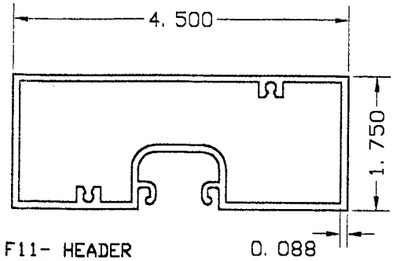

F11- HEADER 4506

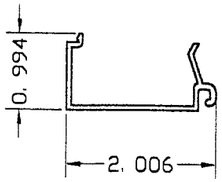

F13- HEADER GLASS STOP USE IN CONJUNCTION W/ F12 4503

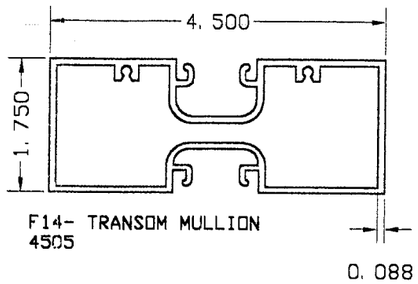

F14- TRANSOM MULLION 4505

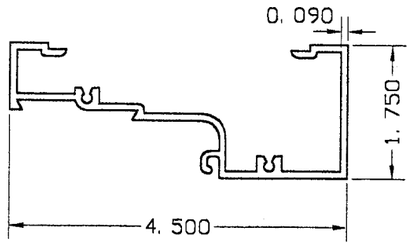

F12- OPEN BACK HEADER 4502

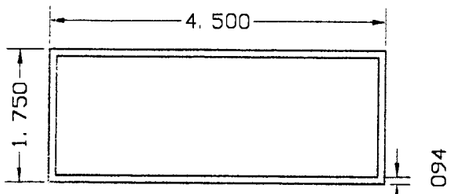

F15- ALTERNATE TRANSOM MULLION 1012 - 6063-T6 ALLOY

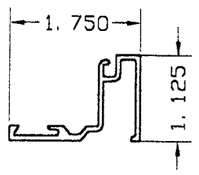

F16- APPLIED SASH USE WITH F15/F17 1051

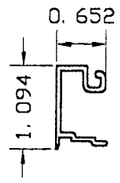

F17- APPLIED SASH USE WITH F15/F16 1051A

PRODUCT RENEWED
as complying with the Florida Building Code
Acceptance No. 06-1129.01
Expiration Date DEC 31, 2011
By Shag L. Chanda
Miami-Dade Product Control Division

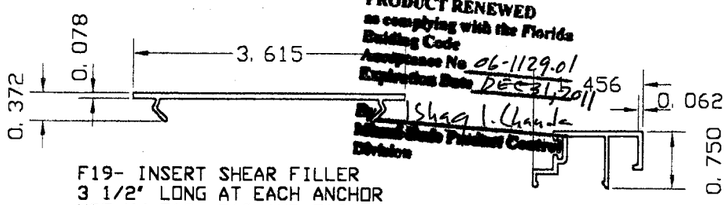

F19- INSERT SHEAR FILLER 3 1/2" LONG AT EACH ANCHOR USE W/ F18, F12 AND F121

F21- DOOR STOP USE W/ F14, F18 4510

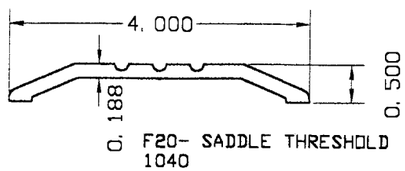

F20- SADDLE THRESHOLD 1040

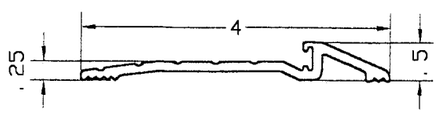

F201- ALTERNATE BUMPER THRESHOLD 2005A

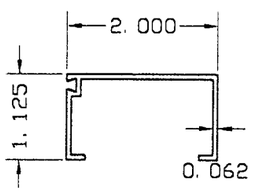

F22- DOOR STOP USE W/ F15 AGA-95

MANUFACTURER:
Arch Aluminum & Glass Co. Inc.
10200 NW 67TH STREET
TAMARAC - FL - 33321
TEL: (800) 432-8132
FAX: (954) 724-9293

PRODUCT:
NI SERIES
ALUMINUM
WIDE STILE
OUTSWING DOOR
NON IMPACT

Engineering:
EngCo Inc.
CA 8116
6971 W. Sunrise Blvd. 104
Plantation, Fl. 33313
Tel.: (954) 585-0304
Fax: (954) 585-0305

APR 18 2006

Engineer Seal
Pedro De Figueiredo
PE 52609

Date: 10/02/05
Scale: NA
Design by: PPMF

PRODUCT CONTROL DIVISION:

PRODUCT REVISED
as complying with the Florida Building Code
Acceptance No. 05-1012.06
Expiration Date 12/31/07
By
Miami-Dade Product Control Division

Drawing Number
05-318

TYPICAL ANCHORS
A- #14 SS WOOD SCREWS OR 1/4" TAPCONS W/ 1 1/2" EMBED. INTO WOOD (SG=.55)
B- 1/4" TAPCONS W/ 1 1/4" EMBED. INTO MASONRY
C- 1/4-14 SELF DRILLING SCREWS INTO METAL STRUCTURES (1/8" MIN. 6063-T5 ALUMINUM OR ASTM A36 STEEL)
ANCHOR NOTES: 1- EDGE DISTANCE (ED.): 1" FOR WOOD, 3" FOR MASONRY & 3/4" FOR METAL 2- QUANTITY AND SPACING OF ANCHORS TYPE A WILL APPLY FOR INSTALLATION WITH BUCK. 3- WOOD BUCKS ARE NOT BY ARCH ALUMINUM, THEY ARE TO BE PROVIDED AND DESIGNED BY OTHERS 4- STRUCTURAL BUCKS ARE TO BE MADE OF MINIMUM 2X5 PT. WOOD. 5- NON STRUCTURAL BUCKS MADE OF LESS THAN 2X MUST BE CONTINUOUS AND FRAMING IS TO BE ATTACHED TO THE MAIN STRUCTURE.

ANCHOR SPACING LAYOUT

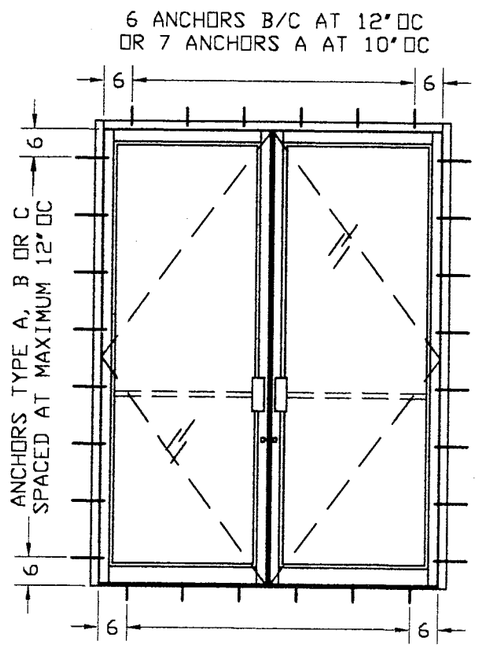

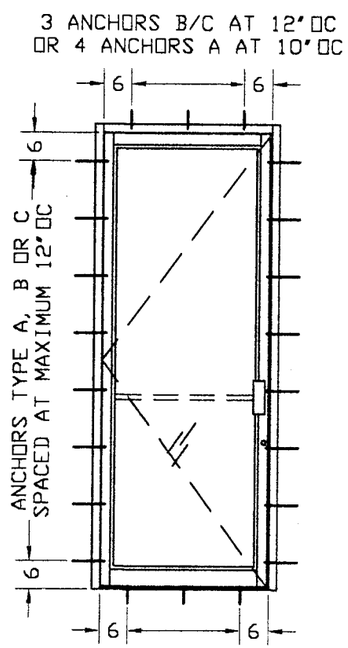

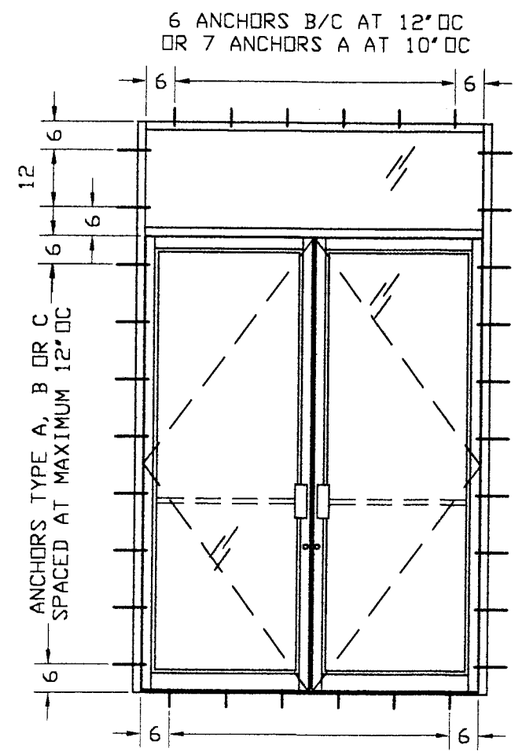

PRODUCT RENEWED
as complying with the Florida Building Code
Acceptance No 06-1129.01
Expiration Date DEC 31, 2011
By Ishaq I. Chanda
Miami Dade Product Control Division

MANUFACTURER:
Arch Aluminum & Glass Co. Inc.
10200 NW 67TH STREET
TAMARAC - FL - 33321
TEL: (800) 432-8132
FAX: (954) 724-9293

PRODUCT:
NI SERIES
ALUMINUM
WIDE STILE
OUTSWING DOOR
NON IMPACT

Engineering:
EngCo Inc.
CA 8116
6971 W. Sunrise Blvd. 104
Plantation, Fl. 33313
Tel.: (954) 585-0304
Fax: (954) 585-0305

APR 18 2006
Engineer Seal
Pedro De Figueiredo
PE 52609

Date: 10/02/05
Scale: NA
Design by: PPMF

PRODUCT CONTROL DIVISION:

PRODUCT REVISED
as complying with the Florida Building Code
Acceptance No 05-1012.06
Expiration Date 12/31/07
By
Miami Dade Product Control Division

Drawing Number
05-318

Sheet
8 of 9

ASSEMBLY DETAILS

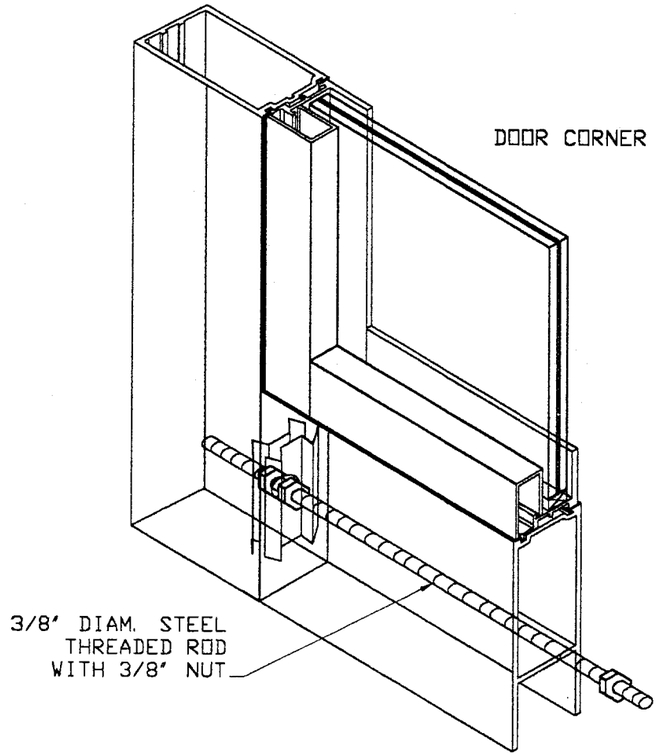

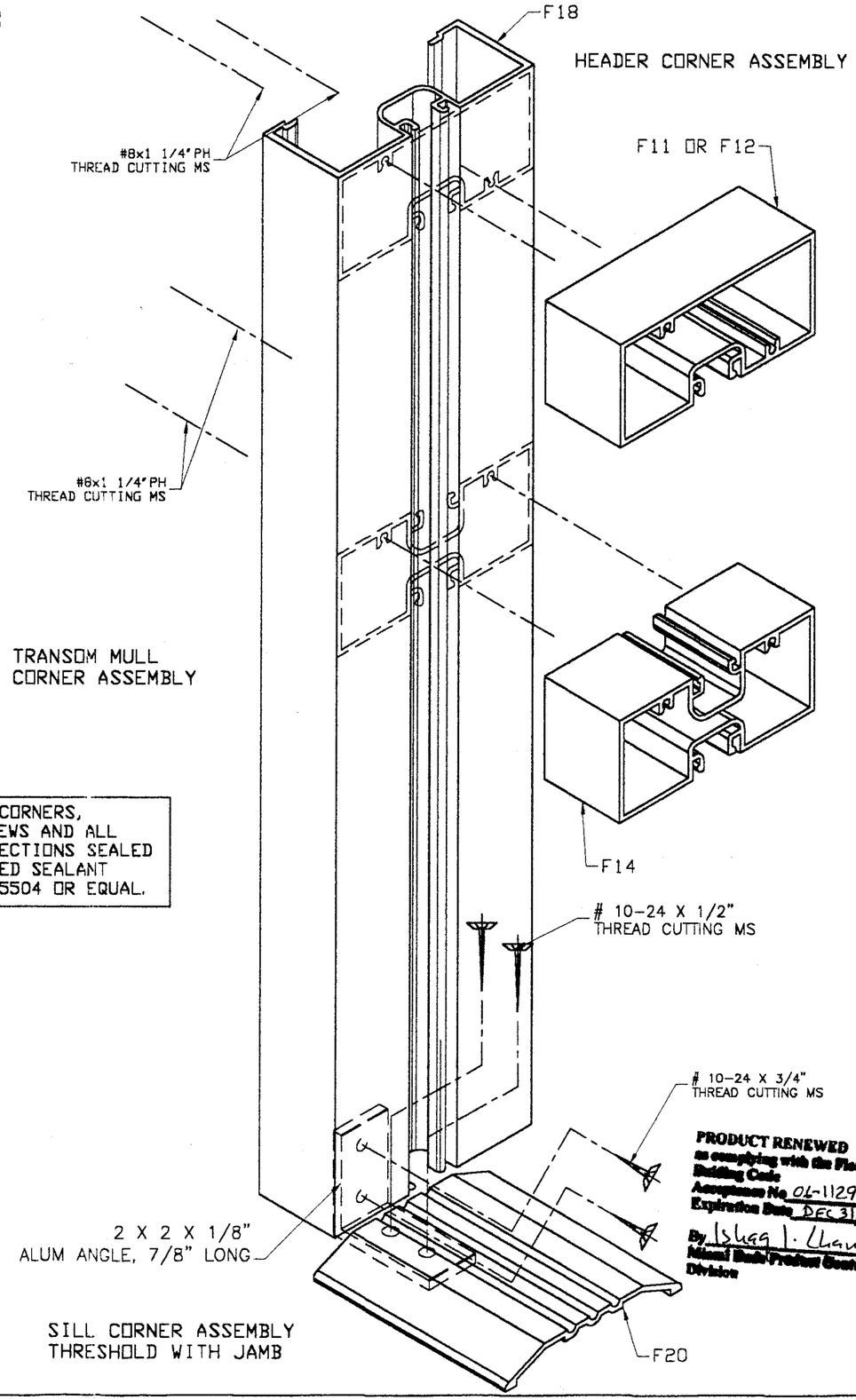

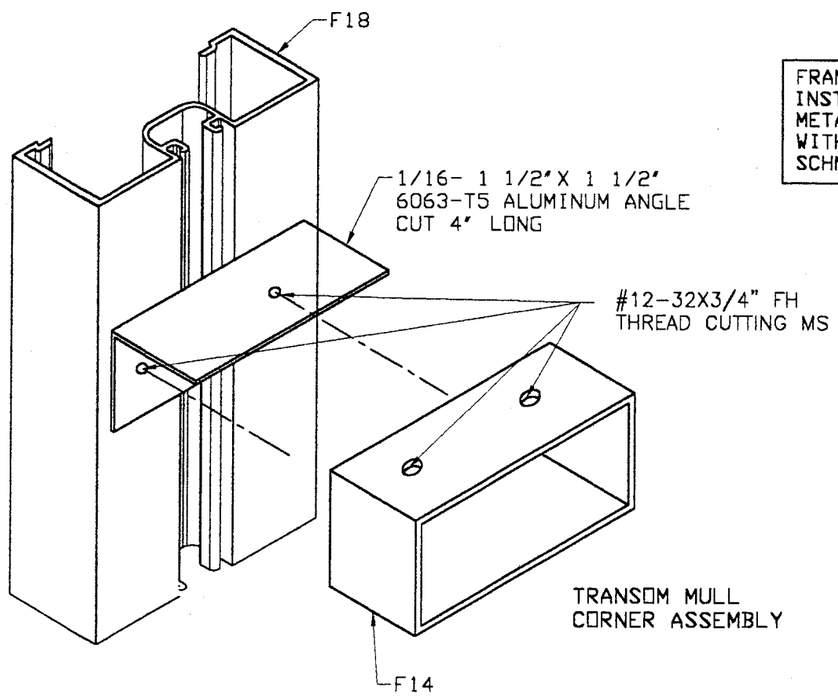

FRAME AND PANEL CORNERS, INSTALLATION SCREWS AND ALL METAL PARTS CONNECTIONS SEALED WITH CLEAR COLORED SEALANT SCHNEE MOREHEAD 5504 OR EQUAL.

MANUFACTURER:
Arch Aluminum & Glass Co. Inc.
10200 NW 67TH STREET
TAMARAC - FL - 33321
TEL: (800) 432-8132
FAX: (954) 724-9293

PRODUCT:
NI SERIES
ALUMINUM
WIDE STILE
OUTSWING DOOR
NON IMPACT

Engineering:
EngCo Inc.
CA 8116
6971 W. Sunrise Blvd. 104
Plantation, Fl. 33313
Tel.: (954) 585-0304
Fax: (954) 585-0305

APR 1 8 2006
Engineer Seal
Pedro De Figueiredo
PE 52609

Date: 10/02/05
Scale: NA
Design by: PPMF

PRODUCT CONTROL DIVISION:

PRODUCT REVISED
as complying with the Florida Building Code
Acceptance No. 05-1012.06
Expiration Date 12/31/07
By
Miami-Dade Product Control Division

PRODUCT RENEWED
as complying with the Florida Building Code
Acceptance No. 06-1129.01
Expiration Date DEC 31, 2011
By
Miami-Dade Product Control Division

Drawing Number
05-318

Sheet
9 of 9