MIAMI-DADE COUNTY, FLORIDA
METRO-DADE FLAGLER BUILDING
140 WEST FLAGLER STREET, SUITE 1603
MIAMI, FLORIDA 33130-1563
(305) 375-2901 FAX (305) 375-2908
www.buldingcodeonline.com

BUILDING CODE COMPLIANCE OFFICE (BCCO)
PRODUCT CONTROL DIVISION

NOTICE OF ACCEPTANCE (NOA)

Innovative Window Concepts, LLC
1801 Corporate Drive
Boynton Beach, FL 33426

SCOPE:

This NOA is being issued under the applicable rules and regulations governing the use of construction materials. The documentation submitted has been reviewed by Miami-Dade County Product Control Division and accepted by the Board of Rules and Appeals (BORA) to be used in Miami Dade County and other areas where allowed by the Authority Having Jurisdiction (AHJ).

This NOA shall not be valid after the expiration date stated below. The Miami-Dade County Product Control Division (In Miami Dade County) and/or the AHJ (in areas other than Miami Dade County) reserve the right to have this product or material tested for quality assurance purposes. If this product or material fails to perform in the accepted manner, the manufacturer will incur the expense of such testing and the AHJ may immediately revoke, modify, or suspend the use of such product or material within their jurisdiction. BORA reserves the right to revoke this acceptance, if it is determined by Miami-Dade County Product Control Division that this product or material fails to meet the requirements of the applicable building code.

This product is approved as described herein, and has been designed to comply with the Florida Building Code, including the High Velocity Hurricane Zone.

DESCRIPTION: Series 1072 Aluminum Single Hung Window – S.M.I.

APPROVAL DOCUMENT: Drawing No. **W03-95**, titled "Series 1072 Alum. Single Hung Window (S.M.I.)", sheets 1 through 5 of 5, dated 10/20/03 with revision D dated 10/19/06, prepared by Al-Farooq Corporation, signed and sealed by Humayoun Farooq, P.E., bearing the Miami-Dade County Product Control Revision stamp with the Notice of Acceptance number and expiration date by the Miami-Dade County Product Control Division.

MISSILE IMPACT RATING: Small Missile Impact Resistant

LABELING: Each unit shall bear a permanent label with the manufacturer's name or logo, city, state and following statement: "Miami-Dade County Product Control Approved", unless otherwise noted herein.

RENEWAL of this NOA shall be considered after a renewal application has been filed and there has been no change in the applicable building code negatively affecting the performance of this product.

TERMINATION of this NOA will occur after the expiration date or if there has been a revision or change in the materials, use, and/or manufacture of the product or process. Misuse of this NOA as an endorsement of any product, for sales, advertising or any other purposes shall automatically terminate this NOA. Failure to comply with any section of this NOA shall be cause for termination and removal of NOA.

ADVERTISEMENT: The NOA number preceded by the words Miami-Dade County, Florida, and followed by the expiration date may be displayed in advertising literature. If any portion of the NOA is displayed, then it shall be done in its entirety.

INSPECTION: A copy of this entire NOA shall be provided to the user by the manufacturer or its distributors and shall be available for inspection at the job site at the request of the Building Official.

This NOA **revises NOA # 05-1004.01** and consists of this page 1 and evidence pages E-1 and E-2, as well as approval document mentioned above.

The submitted documentation was reviewed by **Manuel Perez, P.E.**

PRODUCT CONTROL ACCEPTED

NOA No. 06-1129.05
Expiration Date: February 19, 2009
Approval Date: March 29, 2007

Innovative Window Concetps, LLC

NOTICE OF ACCEPTANCE: EVIDENCE SUBMITTED

A. DRAWINGS

1. Manufacturer's die drawings and sections.
2. Drawing No **W03-55**, Sheets 1 through 5 of 5, titled "Series 1072 Alum. Single Hung Window (S.M.I.)", dated 10/20/03 with revision D dated 10/19/06, prepared by Al-Farooq Corporation, signed and sealed by Humayoun Farooq, P.E.

B. TESTS

1. Test reports on 1) Air Infiltration Test, per FBC, TAS 202-94
   2) Uniform Static Air Pressure Test, Loading per FBC, TAS 202-94
   3) Water Resistance Test, per FBC, TAS 202-94
   4) Small Missile Impact Test, per FBC, TAS 201-94
   5) Cyclic Wind Pressure Loading, per FBC, TAS 203-94
   6) Force Entry Test, per FBC 2411 3.2.1 and TAS 202-94

   along with marked-up drawings and installation diagram of an aluminum single hung window, prepared by American Test Lab of South Florida, Test Report No. **ATL-0422.02-03**, dated 07/24/03, signed and sealed by Henry Hattem, P.E.
   "Submitted under NOA# 03-1201.04"

C. CALCULATIONS

1. Revised Anchor verification calculations and structural analysis, complying with FBC-2004, prepared by Al-Farooq Corporation, dated 10/23/06, signed and sealed by Humayoun Farooq, P.E.
   Complies with ASTM E1300/02
2. Anchor calculations, and structural analysis, complying with FBC-2004, prepared by Al-Farooq Corporation on 09/03/05, signed and sealed by Humayoun Farooq, P.E.
   "Submitted under NOA# 05-1004.01"

D. QUALITY ASSURANCE

1. Miami Dade Building Code Compliance Office (BCCO).

E. MATERIAL CERTIFICATIONS

1. Notice of Acceptance **No. 03-0827.08** issued to Solutia Inc. for "Solutia Interlayers", dated 03/04/04, expiring on 03/04/09.

Manuel Perez, P.E.
Product Control Examiner
NOA No. 06-1129.05
Expiration Date: February 19, 2009
Approval Date: March 29, 2007

NOTICE OF ACCEPTANCE: EVIDENCE SUBMITTED

F. STATEMENTS

1. Statement letter of conformance, dated September 3, 2005, signed and sealed by Humayoun Farooq, P.E.
2. Statement letter of no financial interest, dated September 3, 2005, signed and sealed by Humayoun Farooq, P.E.
3. Laboratory compliance letter for Test Report no. **ATLSF- 0422.02-03**, issued by American Test Lab of South Florida, dated 07/24/03, signed and sealed by William R. Mehner, P.E. and Henry Hattem, P.E.

G. OTHER

1. Notice of Acceptance No. **05-1004.01**, issued to Innovative Window Concepts, LLC for their Series 1072 Aluminum Single Hung Window – S.M.I., approved on 03/23/06 and expiring on 02/19/09.

Manuel Perez, P.E.
Product Control Examiner
NOA No. 06-1129.05
Expiration Date: February 19, 2009
Approval Date: March 29, 2007

UNEQUAL LITES WINDOWS			
DESIGN LOAD CAPACITY – PSF			
FLANGE DIMS.		STD. ANCHOR SPACING	
WIDTH	HEIGHT	EXT.(+)	INT.(–)
19–1/8"	50–5/8" (4)	90.0	160.0
24"		90.0	160.0
26–1/2"		90.0	160.0
32"		90.0	160.0
37"		90.0	145.1
40"		90.0	134.3
48"		90.0	111.9
53–1/8"		90.0	101.1
19–1/8"	63" (5)	90.0	160.0
24"		90.0	160.0
26–1/2"		90.0	160.0
32"		90.0	160.0
37"		90.0	145.8
40"		90.0	134.9
48"		90.0	112.4
53–1/8"		90.0	101.5
19–1/8"	76" (6)	90.0	160.0
24"		90.0	160.0
26–1/2"		90.0	160.0
32"		90.0	160.0
37"		90.0	140.0
40"		90.0	134.1
48"		90.0	111.8
53–1/8"		90.0	101.0
19–1/8"	84" (7)	90.0	160.0
24"		90.0	160.0
26–1/2"		90.0	160.0
32"		90.0	140.0
37"		90.0	140.0
40"		90.0	140.0
19–1/8"	96" (8)	90.0	160.0
24"		90.0	160.0
26–1/2"		90.0	160.0
32"		90.0	140.0
37"		90.0	140.0

* NO. IN PARENTHESIS INDICATE NO. OF ANCHORS PER JAMB.

UNEQUAL LITES WINDOWS			
DESIGN LOAD CAPACITY – PSF			
FLANGE DIMS.		EXTRA JAMB ANCHORS	
WIDTH	HEIGHT	EXT.(+)	INT.(–)
19–1/8"	50–5/8" (6)	90.0	160.0
24"		90.0	160.0
26–1/2"		90.0	160.0
32"		90.0	160.0
37"		90.0	160.0
40"		90.0	160.0
48"		90.0	160.0
53–1/8"		90.0	151.6
19–1/8"	63" (7)	90.0	160.0
24"		90.0	160.0
26–1/2"		90.0	160.0
32"		90.0	160.0
37"		90.0	160.0
40"		90.0	160.0
48"		90.0	140.0
53–1/8"		90.0	140.0
19–1/8"	76" (8)	90.0	160.0
24"		90.0	160.0
26–1/2"		90.0	160.0
32"		90.0	160.0
37"		90.0	140.0
40"		90.0	140.0
48"		90.0	140.0
53–1/8"		90.0	127.3

* NO. IN PARENTHESIS INDICATE NO. OF ANCHORS PER JAMB.

NOTE:
GLASS CAPACITIES ON THIS SHEET ARE BASED ON ASTM E1300–02 (3 SEC. GUSTS) AND FLORIDA BUILDING COMMISSION DECLARATORY STATEMENT DCA05–DEC–219

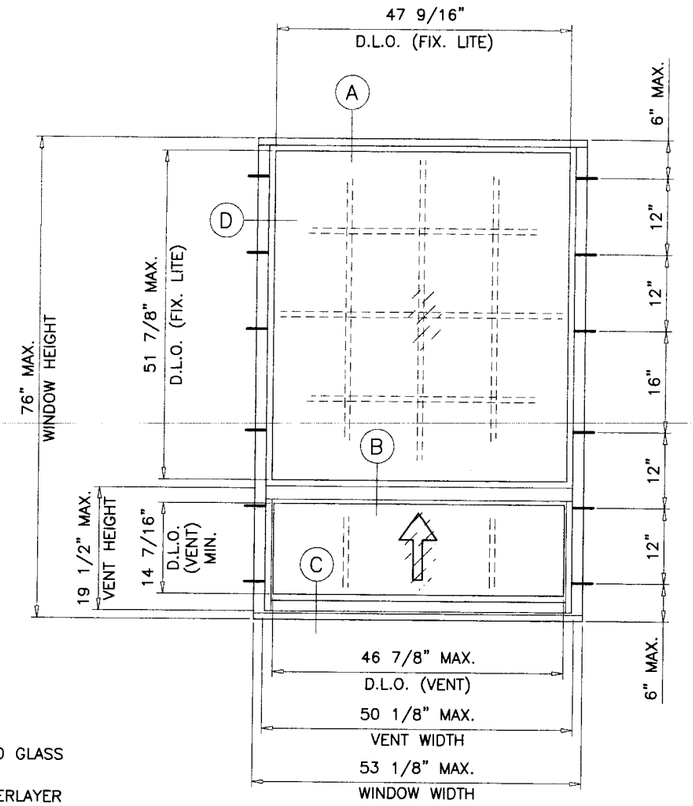

UNEQUAL LITES (ORIEL TYPE)

TYPICAL ELEVATION
TESTED UNIT

WINDOWS RATED FOR SMALL MISSILE IMPACT.
SHUTTERS REQUIRED FOR INSTALLATIONS UP TO 30 FT. OF GRADE
SHUTTERS NOT REQUIRED FOR INSTALLATIONS ABOVE 30 FT.

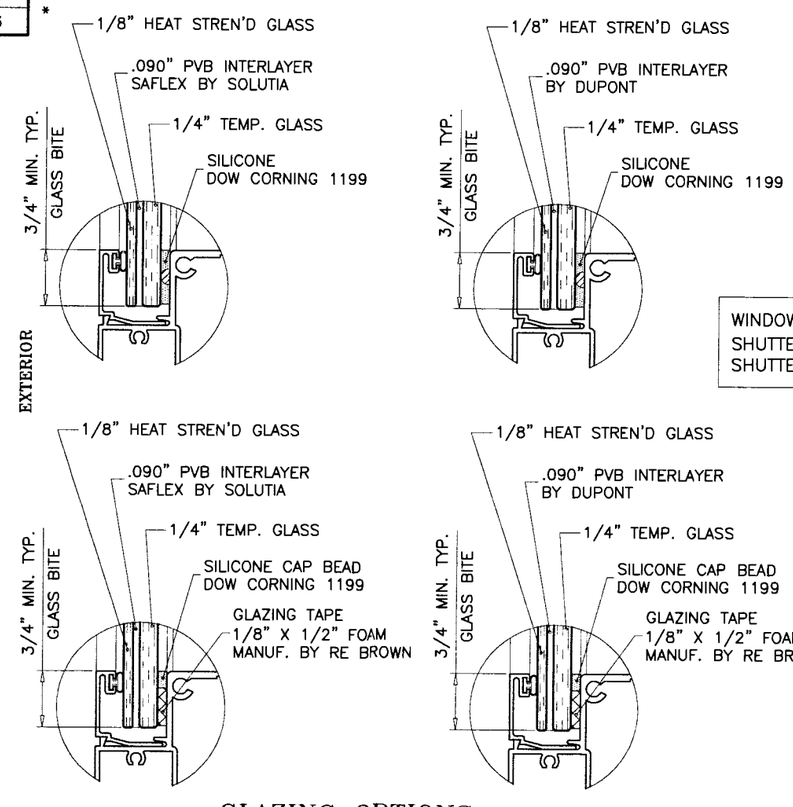

GLAZING OPTIONS

SERIES 1072 ALUM SINGLE HUNG WINDOW (S.M.I.)

DESIGN LOAD RATINGS FOR THESE WINDOWS TO BE AS PER CHARTS SHOWN ON SHEETS 1 AND 2.

THIS PRODUCT HAS BEEN DESIGNED AND TESTED TO COMPLY WITH THE REQUIREMENTS OF THE FLORIDA BUILDING CODE 2004 EDITION INCLUDING HIGH VELOCITY HURRICANE ZONE (HVHZ).

WOOD BUCKS BY OTHERS, MUST BE ANCHORED PROPERLY TO TRANSFER LOADS TO THE STRUCTURE.

ANCHORS SHALL BE AS LISTED, SPACED AS SHOWN ON DETAILS, ANCHORS EMBEDMENT TO BASE MATERIAL SHALL BE BEYOND WALL DRESSING OR STUCCO.

ANCHORING OR LOADING CONDITIONS NOT SHOWN IN THESE DETAILS ARE NOT PART OF THIS APPROVAL.

A LOAD DURATION INCREASE IN ALLOWABLE STRESS IS USED IN DESIGN OF ANCHORS INTO WOOD ONLY.

MATERIALS INCLUDING BUT NOT LIMITED TO STEEL/METAL SCREWS, THAT COME INTO CONTACT WITH OTHER DISSIMILAR MATERIALS SHALL MEET THE REQUIREMENTS OF 2004 FLORIDA BLDG. CODE SECTION 2003.8.4.

Engr: DR. HUMAYOUN FAROOQ
STRUCTURES
FLA. PE # 16557
C.A.N. 3538

OCT 31 2006

PRODUCT REVISED
as complying with the Florida Building Code
Acceptance No. 06-1129.05
Expiration Date FEB. 19, 2009
By: M. Manuel Perez
Miami Dade Product Control Division

AL-FAROOQ CORPORATION
ENGINEERS & PRODUCT DEVELOPMENT
1235 S.W. 87 AVE
MIAMI, FLORIDA 33174
TEL. (305) 264-8100 FAX. (305) 262-6978
COMP–ANL\W03–95IWS

SERIES 1072 ALUM SINGLE HUNG WINDOW (S.M.I.)

INNOVATIVE WINDOW CONCEPTS
505 INDUSTRIAL WAY
BOYNTON BEACH, FL. 33426
TEL. (561) 493–2303 FAX. (561) 493–2302

revisions:

no	date	by	description
A	01.13.04		NO CHANGE THIS SHEET
B	09.06.05		UPDATED FOR 2004 FBC
C	02.01.06		REV. PER BCCO COMMENTS
D	10.19.06		GLAZING TAPE OPTION ADDED

date: 10–20–03
scale: 1/2"=1'–0"
dr. by: HAMID
chk. by:

drawing no.
W03–95

EQUAL LITES WINDOWS

DESIGN LOAD CAPACITY – PSF

FLANGE DIMS.		STD. ANCHOR SPACING	
WIDTH	HEIGHT	EXT.(+)	INT.(–)
19–1/8"	26" (2)	90.0	160.0
24"		90.0	160.0
26–1/2"		90.0	160.0
32"		90.0	160.0
37"		90.0	141.3
40"		90.0	130.7
48"		90.0	108.9
19–1/8"	38–3/8" (3)	90.0	160.0
24"		90.0	160.0
26–1/2"		90.0	160.0
32"		90.0	160.0
37"		90.0	143.6
40"		90.0	132.8
48"		90.0	110.7
53–1/8"		90.0	100.0
19–1/8"	50–5/8" (4)	90.0	160.0
24"		90.0	160.0
26–1/2"		90.0	160.0
32"		90.0	160.0
37"		90.0	145.1
40"		90.0	134.3
48"		90.0	111.9
53–1/8"		90.0	101.1
19–1/8"	63" (5)	90.0	160.0
24"		90.0	160.0
26–1/2"		90.0	160.0
32"		90.0	160.0
37"		90.0	145.8
40"		90.0	134.9
48"		90.0	112.4
53–1/8"		90.0	101.5
19–1/8"	76" (6)	90.0	160.0
24"		90.0	160.0
26–1/2"		90.0	160.0
32"		90.0	160.0
37"		90.0	145.0
40"		90.0	134.1
48"		90.0	111.8
53–1/8"		90.0	101.0
19–1/8"	84" (7)	90.0	160.0
24"		90.0	160.0
26–1/2"		90.0	160.0
32"		90.0	160.0
37"		90.0	153.1
40"		90.0	141.6
48"		90.0	118.0
19–1/8"	96" (8)	90.0	160.0
24"		90.0	160.0
26–1/2"		90.0	160.0
32"		90.0	160.0
37"		90.0	153.1
40"		90.0	141.6

* NO. IN PARENTHESIS INDICATE NO. OF ANCHORS PER JAMB.

EQUAL LITES WINDOWS

DESIGN LOAD CAPACITY – PSF

FLANGE DIMS.		EXTRA JAMB ANCHORS	
WIDTH	HEIGHT	EXT.(+)	INT.(–)
19–1/8"	26" (3)	90.0	160.0
24"		90.0	160.0
26–1/2"		90.0	160.0
32"		90.0	160.0
37"		90.0	160.0
40"		90.0	160.0
48"		90.0	160.0
19–1/8"	38–3/8" (5)	90.0	160.0
24"		90.0	160.0
26–1/2"		90.0	160.0
32"		90.0	160.0
37"		90.0	160.0
40"		90.0	160.0
48"		90.0	160.0
53–1/8"		90.0	160.0
19–1/8"	50–5/8" (6)	90.0	160.0
24"		90.0	160.0
26–1/2"		90.0	160.0
32"		90.0	160.0
37"		90.0	160.0
40"		90.0	160.0
48"		90.0	160.0
53–1/8"		90.0	151.6
19–1/8"	63" (7)	90.0	160.0
24"		90.0	160.0
26–1/2"		90.0	160.0
32"		90.0	160.0
37"		90.0	160.0
40"		90.0	160.0
48"		90.0	157.3
53–1/8"		90.0	142.2
19–1/8"	76" (8)	90.0	160.0
24"		90.0	160.0
26–1/2"		90.0	160.0
32"		90.0	160.0
37"		90.0	160.0
40"		90.0	160.0
48"		90.0	149.1
53–1/8"		90.0	134.7
19–1/8"	84" (8)	90.0	160.0
24"		90.0	160.0
26–1/2"		90.0	160.0
32"		90.0	160.0
37"		90.0	160.0
40"		90.0	160.0
48"		90.0	134.9
19–1/8"	96" (9)	90.0	160.0
24"		90.0	160.0
26–1/2"		90.0	160.0
32"		90.0	160.0
37"		90.0	160.0
40"		90.0	159.3

* NO. IN PARENTHESIS INDICATE NO. OF ANCHORS PER JAMB.

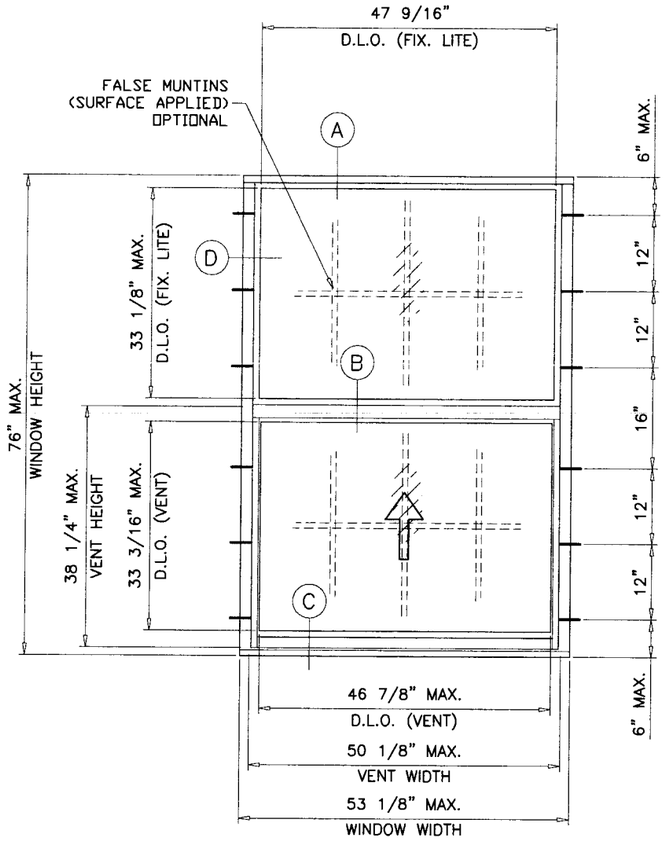

EQUAL LITES

TYPICAL ELEVATION

TESTED UNIT

NOTE:
GLASS CAPACITIES ON THIS SHEET ARE BASED ON ASTM E1300–02 (3 SEC. GUSTS) AND FLORIDA BUILDING COMMISSION DECLARATORY STATEMENT DCA05–DEC–219

Engr: DR. HUMAYOUN FAROOQ
STRUCTURES
FLA. PE # 16557
C.A.N. 3538

OCT 31 2006

PRODUCT REVIEWED
as complying with the Florida Building Code
Acceptance No. 06-1129.05
Expiration Date FEB. 19, 2009
By Manuel Sera
Miami-Dade Product Control Division

AL-FAROOQ CORPORATION
ENGINEERS & PRODUCT DEVELOPMENT
1235 S.W. 87 AVE
MIAMI, FLORIDA 33174
TEL. (305) 264-8100 FAX. (305) 262-6978
COMP–ANL\W03–95IWS

SERIES 1072 ALUM SINGLE HUNG WINDOW (S.M.I.)

INNOVATIVE WINDOW CONCEPTS
505 INDUSTRIAL WAY
BOYNTON BEACH, FL. 33426
TEL. (561) 493–2303 FAX. (561) 493–2302

revisions:

no	date	by	description
A	01.13.04		NO CHANGE THIS SHEET
B	09.06.05		CHARTS REV.
C	02.01.06		REV. PER BCCO COMMENTS
D	10.19.06		NOTE REV.

date: 10–20–03
scale: 1/2"=1'–0"
dr. by: HAMID
chk. by:

drawing no.
W03–95

sheet 2 of 5

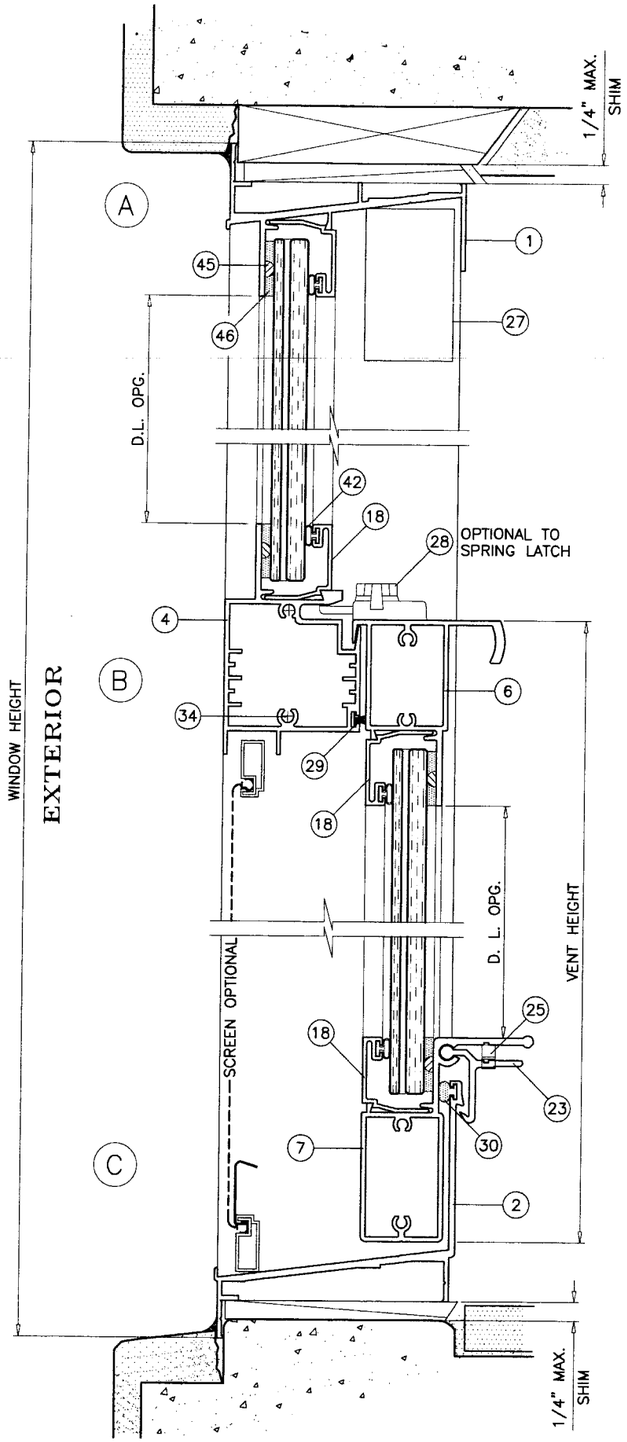

WOOD BUCKS NOT BY I.W.C., MUST SUSTAIN LOADS IMPOSED BY GLAZING SYSTEM AND TRANSFER THEM TO THE BUILDING STRUCTURE.

TYPICAL ANCHORS: SEE ELEV. FOR SPACING

1/4" TAPCONS

INTO WOOD STRUCTURES
2" MIN. PENETRATION INTO WOOD

THRU 1BY OR 2BY BUCKS INTO CONC. OR MASONRY
1-1/4" MIN. EMBED INTO CONC. OR MASONRY

DIRECTLY INTO CONC. OR MASONRY
1-1/4" MIN. EMBED INTO CONC. OR MASONRY

3/16" TEKS OR SELF DRILLING SCREWS

INTO METAL STRUCTURES (1/8" MIN. THICKNESS)
(1/4" MAX. SHIM SPACE)

#10 SMS OR SELF DRILLING SCREWS

INTO DADE COUNTY APPROVED MULLIONS
(NO SHIM SPACE)

ANCHORS EDGE DISTANCES:

INTO CONCRETE AND MASONRY = 2-1/2" MIN.
INTO WOOD STRUCTURE = 1" MIN.
INTO METAL STRUCTURE = 5/8" MIN.

SEALANT:

ALL JOINTS AND FRAME CONNECTIONS SEALED WITH SCHNEE MOREHEAD SEAM SEALER SM5504.

Engr: DR. HUMAYOUN FAROOQ
STRUCTURES
FLA. PE # 16557
C.A.N. 3538

PRODUCT REVISED
as complying with the Florida Building Code
Acceptance No. 06-1129.05
Expiration Date FEB. 19, 2009
By Manuel Perez
Miami-Dade Product Control Division

AL-FAROOQ CORPORATION
ENGINEERS & PRODUCT DEVELOPMENT
1235 S.W. 87 AVE
MIAMI, FLORIDA 33174
TEL. (305) 264-8100 FAX. (305) 262-6978
COMP-ANL\W03-95IWS

SERIES 1072 ALUM SINGLE HUNG WINDOW (S.M.I.)

INNOVATIVE WINDOW CONCEPTS
505 INDUSTRIAL WAY
BOYNTON BEACH, FL. 33426
TEL. (561) 493-2303 FAX. (561) 493-2302

revisions:

no	date	by	description
A	01.13.04		NO CHANGE THIS SHEET
B	09.06.05		ANCHORS REV.
C	02.01.06		REV. PER BCCO COMMENTS
D	10.19.06		EDGE DIST. ADDED

date: 10-20-03
scale: 1/2" = 1"
dr. by: HAMID
chk. by:

drawing no. W03-95

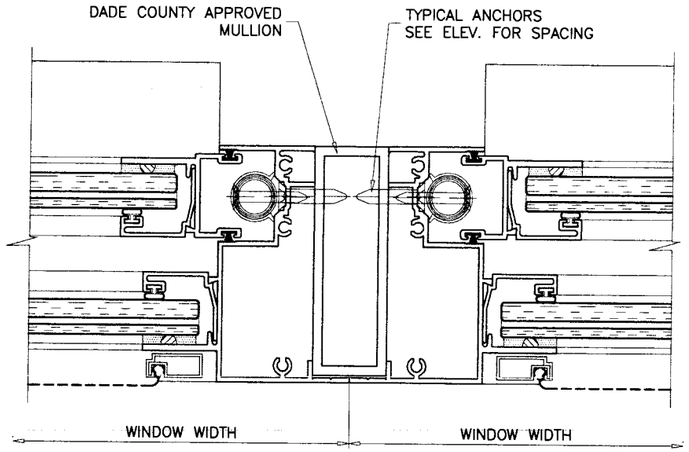

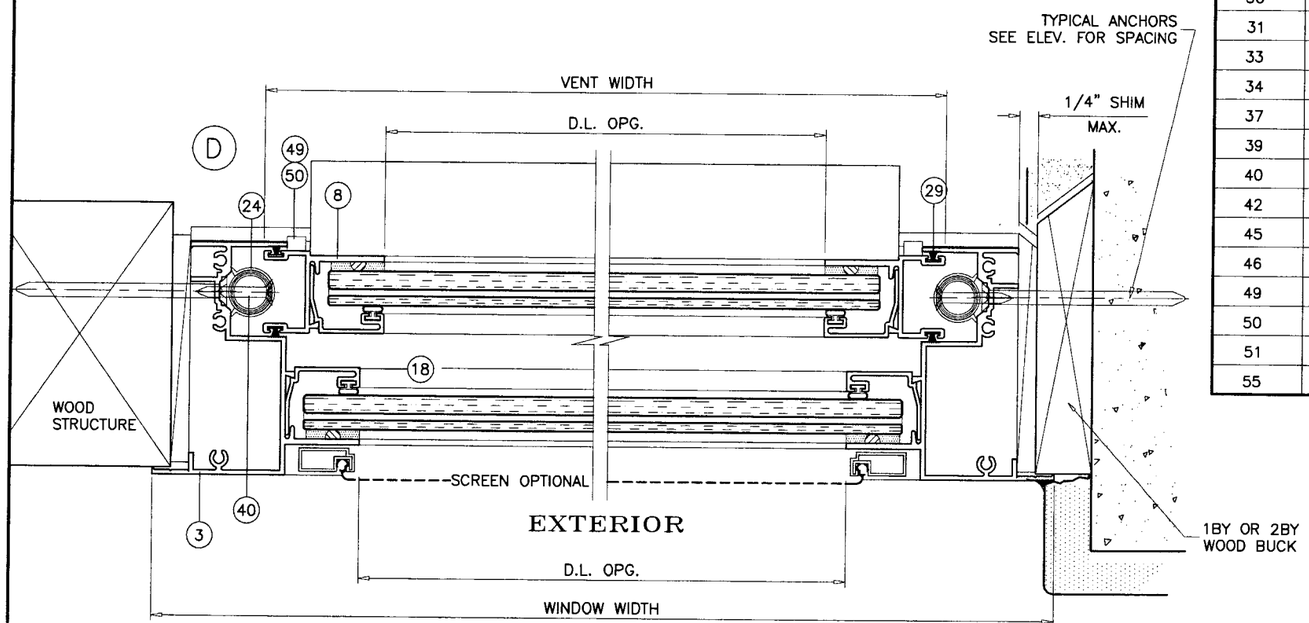

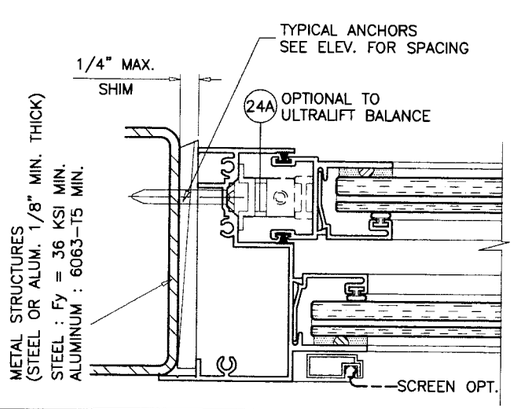

ITEM NO.	PART NO.	QUANTITY	DESCRIPTION	MATERIAL	MANF./SUPPLIER/REMARKS
1	021-029	1	FRAME HEAD	6063-T5	ARCH ALUM.
2	021-002	1	FRAME SILL	6063-T5	ARCH ALUM.
3	021-005	2	FRAME JAMB	6063-T6	ARCH ALUM.
4	022-007	1	MTG. RAIL	6063-T5	ARCH ALUM.
6	022-004	1	VENT TOP RAIL	6063-T5	ARCH ALUM.
7	022-001	1	VENT BOTTTOM RAIL	6063-T5	ARCH ALUM.
8	021-003	2	VENT SIDE RAIL	6063-T5	ARCH ALUM.
18	021-011	4/ LITE	GLAZING BEAD	6063-T5	ARCH ALUM.
23	021-008	2/ VENT	SNAP LATCH (2 @ 3" LG)	6063-T5	ARCH ALUM.
24	025-000	2	ULTRA LIFT BALANCE		CALDWELL MFG
24A	024-000	2	BLOCK & TACKLE BALANCE		BSI
25	006-001	2	SPRING	ST/ST	IND. SPRING
26	004-005	–	UEK BRACKET	STEEL	CALDWELL MFG
27	010-001	–	SASH STOP	RIGID VINYL	MASTER TOOL
28	004-002	–	SWEEP LOCK @ 7" FROM ENDS	METAL	SULLIVAN & ASSOC.
29	016-001	AS REQD.	FIN SEAL	WOOL PILE	ULTRA FAB
30	023-001	–	FILLED BULB VINYL		AMESBURY
31	015-009	–	CHIMNEY PLUG	CLOSED CELL	FRANK LOWE RUBBR
33	008-014	AS REQD.	#8X1 PHPH SMS	ST/ST	
34	008-031	2/ END	#10X1 PHPH SMS	ST/ST	
37	012-001	–	SEAM SEALER SM5504	ACRYLIC	SCHNEE MOREHEAD
39	008-010	–	#8X1/2 UCFHPH SMS	ST/ST	
40	008-017	–	#8X1 1/4 FHPH SMS	ST/ST	
42	015-001	AS REQD.	BULB VYNIL	VINYL	MASTER TOOL
45	015-006	–	0.150 SPACER	VINYL	FRANK LOWE RUBBR
46	012-004	–	DOW 1199	SILICONE	DOW CORNING
49	010-010	–	SASH GUIDE TOP	RIGID PVB	M & M PLASTICS
50	010-011	–	SASH GUIDE BOT	RIGID PVB	M & M PLASTICS
51	008-002	–	#6X1/2 FHPH SMS	ST/ST	
55	003-001	AS REQD.	ROLL FORM SCREEN FRAME	ALUMINUM	FLORIDA SCREEN

Engr: DR. HUMAYOUN FAROOQ
STRUCTURES
FLA. PE # 16557
C.A.N. 3538

OCT 31 2006

PRODUCT REVISED
as complying with the Florida Building Code
Acceptance No. 06-1129.05
Expiration Date FEB. 19, 2009
By Miami Dade Product Control Division

AL-FAROOQ CORPORATION
ENGINEERS & PRODUCT DEVELOPMENT
1235 S.W. 87 AVE
MIAMI, FLORIDA 33174
TEL. (305) 264-8100 FAX. (305) 262-6978
COMP-ANL\W03-95IWS

SERIES 1072 ALUM SINGLE HUNG WINDOW (S.M.I.)

INNOVATIVE WINDOW CONCEPTS
505 INDUSTRIAL WAY
BOYNTON BEACH, FL. 33426
TEL. (561) 493-2303 FAX. (561) 493-2302

revisions:

no	date	by	description
A	01.13.04		NO CHANGE THIS SHEET
B	09.06.05		NO CHANGE THIS SHEET
C	02.01.06		REV. PER BCCO COMMENTS
D	10.19.06		NO CHANGE THIS SHEET

date: 10-20-03
scale: 1/2" = 1"
dr. by: HAMID
chk. by:

drawing no.
W03-95

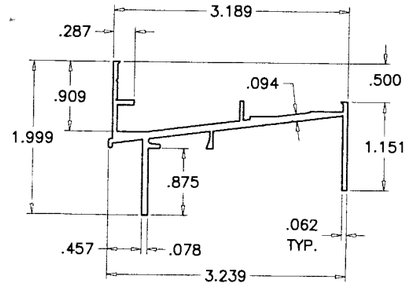

1 FRAME HEAD

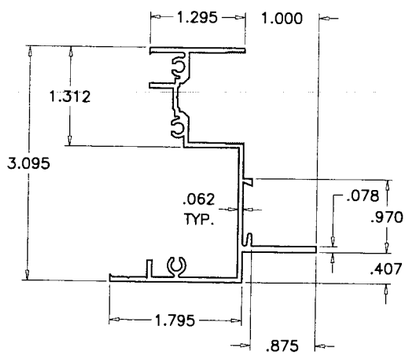

3 FRAME JAMB

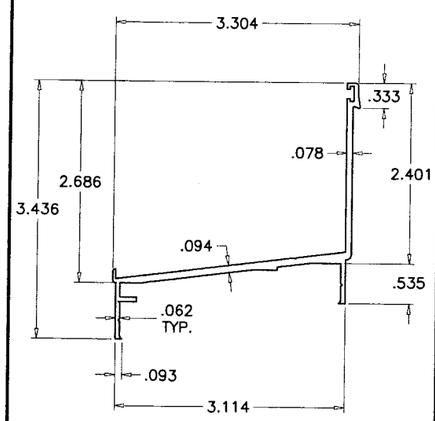

2 FRAME SILL

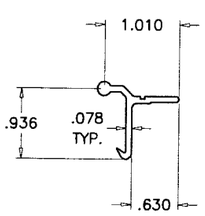

23 LATCH

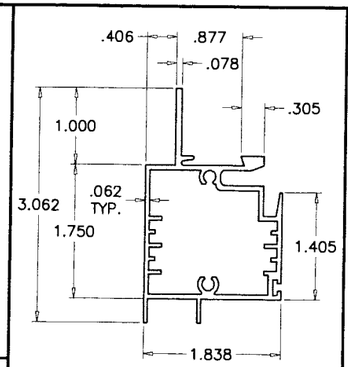

4 FIXED MEETING RAIL

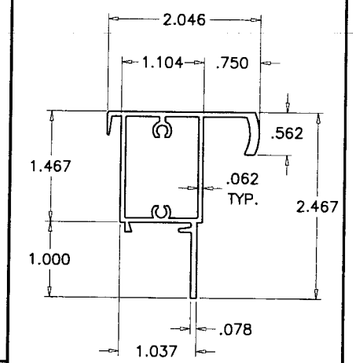

6 VENT TOP RAIL

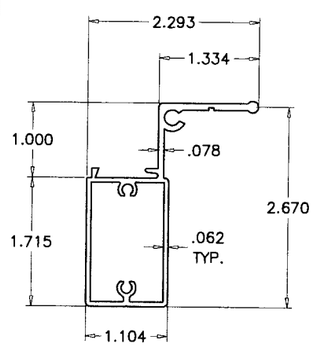

7 VENT BOTTOM RAIL

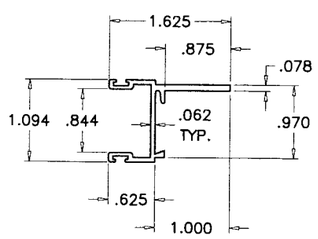

8 VENT SIDE RAIL

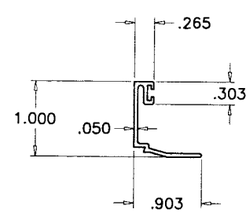

18 GLAZING BEAD

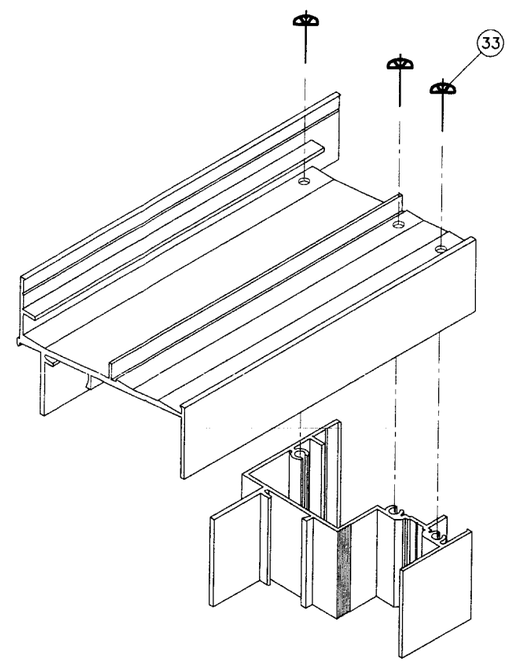

FRAME CORNERS

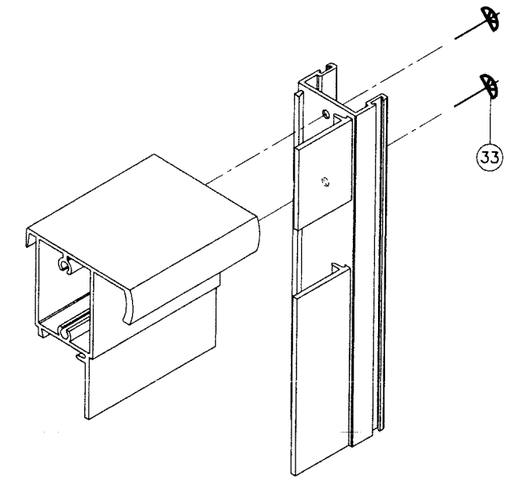

VENT TOP CORNER

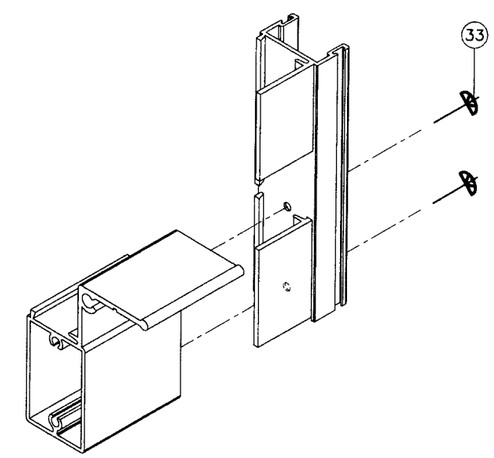

VENT BOTTOM CORNER

Engr: DR. HUMAYOUN FAROOQ
STRUCTURES
FLA. PE # 16557
C.A.N. 3538

OCT 3

PRODUCT REVISED
as complying with the Florida
Building Code
Acceptance No 06-1129.05
Expiration Date FEB. 19, 2009
By: [signature]
Miami Dade Product Control
Division

AL-FAROOQ CORPORATION
ENGINEERS & PRODUCT DEVELOPMENT
1235 S.W. 87 AVE
MIAMI, FLORIDA 33174
TEL. (305) 264-8100 FAX. (305) 262-6978

COMP-ANL\W03-95IWS

SERIES 1072 ALUM SINGLE HUNG WINDOW (S.M.I.)

INNOVATIVE WINDOW CONCEPTS
505 INDUSTRIAL WAY
BOYNTON BEACH, FL. 33426
TEL. (561) 493-2303 FAX. (561) 493-2302

revisions:

no	date	by	description
A	01.13.04		REV. PER BCCO COMMENTS
B	09.06.05		NO CHANGE THIS SHEET
C	02.01.06		NO CHANGE THIS SHEET
D	10.19.06		NO CHANGE THIS SHEET

date: 10-20-03
scale: 1/2" = 1"
dr. by: HAMID
chk. by:

drawing no.
W03-95

sheet 5 of 5