MIAMI-DADE COUNTY
BUILDING CODE COMPLIANCE OFFICE (BCCO)
PRODUCT CONTROL DIVISION

MIAMI-DADE COUNTY, FLORIDA
METRO-DADE FLAGLER BUILDING

140 WEST FLAGLER STREET, SUITE 1603
MIAMI, FLORIDA 33130-1563
(305) 375-2901 FAX (305) 375-2908
www.miamidade.gov

NOTICE OF ACCEPTANCE (NOA)

Jordan's Aluminum, Inc.
5731 Dewey Street
Hollywood, FL 33023

SCOPE:
This NOA is being issued under the applicable rules and regulations governing the use of construction materials. The documentation submitted has been reviewed by Miami-Dade County Product Control Division and accepted by the Board of Rules and Appeals (BORA) to be used in Miami Dade County and other areas where allowed by the Authority Having Jurisdiction (AHJ).

This NOA shall not be valid after the expiration date stated below. The Miami-Dade County Product Control Division (In Miami Dade County) and/or the AHJ (in areas other than Miami Dade County) reserve the right to have this product or material tested for quality assurance purposes. If this product or material fails to perform in the accepted manner, the manufacturer will incur the expense of such testing and the AHJ may immediately revoke, modify, or suspend the use of such product or material within their jurisdiction. BORA reserves the right to revoke this acceptance, if it is determined by Miami-Dade County Product Control Division that this product or material fails to meet the requirements of the applicable building code.

This product is approved as described herein, and has been designed to comply with the High Velocity Hurricane Zone of the Florida Building Code.

DESCRIPTION: **(550 Series) 0.050" Aluminum Storm Panels Shutter**

APPROVAL DOCUMENT: Drawing No. 05-198, titled " 550 Series 0.050" Aluminum Storm Panel", sheets 1 through 14 of 14, prepared by Tilteco, Inc., dated July 14, 2005, last revision #1 dated January 08, 2007, signed and sealed by Walter A. Tillit Jr., P.E., bearing the Miami-Dade County Product Control Approval stamp with the Notice of Acceptance number and approval date by the Miami-Dade County Product Control Division.

MISSILE IMPACT RATING: **Large and Small Missile Impact**

LABELING: Each panel shall bear a permanent label with the manufacturer's name or logo, city, state and the following statement: "Miami-Dade County Product Control Approved", unless otherwise noted herein.

RENEWAL of this NOA shall be considered after a renewal application has been filed and there has been no change in the applicable building code negatively affecting the performance of this product.

TERMINATION of this NOA will occur after the expiration date or if there has been a revision or change in the materials, use, and/or manufacture of the product or process. Misuse of this NOA as an endorsement of any product, for sales, advertising or any other purposes shall automatically terminate this NOA. Failure to comply with any section of this NOA shall be cause for termination and removal of NOA.

ADVERTISEMENT: The NOA number preceded by the words Miami-Dade County, Florida, and followed by the expiration date may be displayed in advertising literature. If any portion of the NOA is displayed, then it shall be done in its entirety.

INSPECTION: A copy of this entire NOA shall be provided to the user by the manufacturer or its distributors and shall be available for inspection at the job site at the request of the Building Official.

This NOA consists of this page 1, evidence submitted page E-1 as well as approval document mentioned above. The submitted documentation was reviewed by **Helmy A. Makar, P.E., M.S.**

PRODUCT CONTROL ACCEPTED

Helmy A. Makar
02/22/2007

NOA No. 06-1129.07
Expiration Date: 02/22/2012
Approval Date: 02/22/2007

Jordan's Aluminum, Inc.

NOTICE OF ACCEPTANCE: EVIDENCE SUBMITTED

A. DRAWINGS

1. *Drawing No. 05-198, titled " 550 Series 0.050" Aluminum Storm Panel", sheets 1 through 14 of 14, prepared by Tilteco, Inc., dated July 14, 2005, last revision #1 dated January 08, 2007, signed and sealed by Walter A. Tillit Jr., P.E.*

B. TESTS

1. *Test report on Large Missile Impact Test, Cyclic Wind Pressure Test, and Uniform Static Air Pressure Test of 0.050" aluminum storm panels, prepared by American Test Lab of South Florida, Report No. 1011.01-05, dated November 08, 2006, signed and sealed by William R. Mehner, P.E., and Henry Hattem, P.E.*

C. CALCULATIONS

1. *Comparative Analysis, Anchor Calculations and details for 0.050" Aluminum Storm Panels, dated January 09, 2007, pages 1 through 145 of 145, prepared by Tilteco, Inc., signed and sealed by Walter A. Tillit Jr., P.E.*

D. QUALITY ASSURANCE

1. *By Miami-Dade County Building Code Compliance Office.*

E. MATERIAL CERTIFICATIONS

1. *Mill Certified Inspection Report of coils, dated June 16, 2006, for Aluminum Alloy 3004-H34 by American Corporation, with chemical composition and physical properties.*
2. *Certified Tensile Test Report by QC Metallurical, Inc., Report No. 5JM-1023, dated November 16, 2005 for sample #C, E, & F, signed and sealed by Frank Grate, P.E.*

Helmy A. Makar, P.E., M.S.
Product Control Examiner
NOA No. 06-1129.07
Expiration Date: 02/22/2012
Approval Date: 02/22/2007

GENERAL NOTES:

1. STORM PANEL SHOWN ON THIS PRODUCT APPROVAL DOCUMENT (P.A.D.) HAS BEEN VERIFIED FOR CODE COMPLIANCE IN ACCORDANCE WITH THE 2004 EDITION OF THE FLORIDA BUILDING CODE WITH THE 2005 AND 2006 SUPPLEMENTS.
THIS STORM PANEL MAY BE INSTALLED AT HIGH VELOCITY HURRICANE ZONES.
DESIGN WIND LOADS SHALL BE DETERMINED AS PER SECTION 1620 OF THE ABOVE MENTIONED CODE. IN ORDER TO VERIFY THAT COMPONENTS AND ANCHORS ON THIS P.A.D. AS TESTED WERE NOT OVER STRESSED, A 33% INCREASE IN ALLOWABLE STRESS FOR WIND LOADS WAS NOT USED IN THEIR ANALYSIS. A DURATION FACTOR CD=1.60 WAS USED FOR VERIFICATION OF FASTENERS SPACINGS IN WOOD.
STORM PANEL'S ADEQUACY FOR IMPACT AND FATIGUE RESISTANCE HAS BEEN VERIFIED IN ACCORDANCE WITH SECTION 1609.1.4 OF THE ABOVE MENTIONED CODE AS PER ATL REPORT # 1011.01-05, PER TAS-201, TAS-202, AND TAS-203 PROTOCOLS.

2. ALL ALUMINUM SHEET METAL PANELS SHALL HAVE 3004-H34 ALLOY , WITH Fy=25.0 ksi YIELD STRENGTH (AVERAGE, AFTER ROLLED).

3. ALL ALUMINUM EXTRUSIONS SHALL BE ALUMINUM ASSOCIATION 6063-T6 ALLOY AND TEMPER, WITH Fy = 25.0 ksi MINIMUM (UNLESS OTHERWISE NOTED).

4. ALL SCREWS TO BE STAINLESS STEEL 304 OR 316 AISI SERIES AND MEET ASTM A167, OR CORROSION RESISTANT COATED CARBON STEEL AS PER DIN 50018 W/ 50 ksi YIELD STRENGTH AND 90 ksi TENSILE STRENGTH.

5. BOLTS TO BE ASTM A-307 GALVANIZED STEEL OR AISI 304 SERIES STAINLESS STEEL, WITH 35 ksi MINIMUM YIELD STRENGTH.

6. ANCHORS TO WALL SHALL BE AS FOLLOWS: (UNLESS OTHERWISE NOTED):

(A) TO EXISTING POURED CONCRETE: (MIN. = f"c =3300 ksi).
-1/4" ø TAPCON ANCHORS AS MANUFACTURED BY I.T.W./BUILDEX.
-1/4" ø MALE PANEL MATE ANCHORS AS MANUFACTURED BY ELCO TEXTRON, INC.
-1/4" ø x 7/8" CALK-IN ANCHORS, AS MANUFACTURED BY POWERS FASTENERS, INC.

NOTES:
A.1) MINIMUM EMBEDMENT INTO POURED CONCRETE OF TAPCON ANCHORS IS 1 3/4"; FOR ELCO PANELMATE IS 2".
A.2) 7/8" ø CALK-IN ANCHORS SHALL BE ENTIRELY EMBEDDED INTO THE POURED CONCRETE. NO EMBEDMENT INTO STUCCO SHALL BE PERMITTED. 1/4" ø-20 SCREWS USED SHALL BE 1 1/2" LONG MINIMUM SHOULD STUCCO EXIST, AND 1" MINIMUM FOR WALLS WITH NO STUCCO.

A.3) IN CASE THAT PRECAST STONE, PRECAST CONCRETE PANELS, OR PAVERS BE FOUND ON THE EXISTING WALL OR FLOOR, ANCHORS SHALL BE LONG ENOUGH TO REACH THE MAIN STRUCTURE BEHIND SUCH PANELS, ANCHORAGE SHALL BE AS INDICATED ON NOTES A.1) & A.2) ABOVE.

(B) TO EXISTING A.S.T.M. C-90 CONCRETE BLOCK WALL:
-1/4" ø TAPCON ANCHORS AS MANUFACTURED BY I.T.W./BUILDEX.
-1/4" ø MALE PANEL MATE ANCHORS AS MANUFACTURED BY ELCO TEXTRON, INC.
-1/4" ø x 7/8" CALK-IN ANCHORS, AS MANUFACTURED BY POWERS FASTENERS, INC.

NOTES:
B.1) MINIMUM EMBEDMENT OF TAPCON ANCHORS & ELCO PANELMATE, INTO THE CONCRETE BLOCK UNIT, SHALL BE 1 1/4".

B.2) 7/8" ø CALK-IN ANCHORS SHALL BE ENTIRELY EMBEDDED INTO THE CONCRETE BLOCK UNIT NO EMBEDMENT INTO STUCCO SHALL BE PERMITTED. 1/4" ø-20 SCREWS USED SHALL BE 1 1/2" LONG MINIMUM SHOULD STUCCO EXIST, AND 1" MINIMUM FOR WALLS WITH NO STUCCO.

B.3) IN CASE THAT PRECAST STONE OR PRECAST CONCRETE PANELS BE FOUND ON THE EXISTING WALL, ANCHORS SHALL BE LONG ENOUGH TO REACH THE MAIN STRUCTURE BEHIND SUCH PANELS. ANCHORAGE SHALL BE AS INDICATED ON NOTES IN B.1) & B.2) ABOVE.

(C) TO EXISTING WOOD FRAME BUILDINGS, SEE SPECIFICATIONS ON SHEETS 12, 13 & 14. ANCHORAGE SHALL BE PERFORMED BEYOND ANY FINISH MATERIAL AT WALL LIKE BRICK VENEER, STUCCO OR ANY OTHER FINISH W/ 1 1/2" MIN. THREADED PENETRATION FOR TAPCON ANCHORS. MIN. THREADED PENETRATION FOR ALL POINTS SCREW, BOLT AND SPECIALTY CO. BRASS BUSHINGS IS 5/8".

(D) ANCHORS SHALL BE INSTALLED FOLLOWING ALL OF THE RECOMMENDATIONS AND SPECIFICATIONS OF THE ANCHOR'S MANUFACTURER.

7. PANELS MAY ALSO BE INSTALLED HORIZONTALLY FOLLOWING INSTALLATION DETAILS SHOWN ON SECTIONS 1 THRU 9 (SHEET 4 THRU 7) EXCEPT THAT HEADERS 2, 3 & 4 SHALL NOT BE USED.

8. IT SHALL BE THE RESPONSIBILITY OF THE CONTRACTOR TO VERIFY THE SOUNDNESS OF THE STRUCTURE WHERE SHUTTER IS TO BE ATTACHED TO INSURE PROPER ANCHORAGE. CONTRACTOR TO SEAL/CAULK ALL SHUTTER COMPONENT EDGES WHICH REMAIN IN CONTINUOUS CONTACT WITH THE BUILDING DUE TO THEIR FASTENING TO IT, TO PREVENT WIND/RAIN INTRUSION.

9. 0.050" ALUMINUM STORM PANEL SHALL COMPLY WITH SPECIFICATIONS INDICATED IN THIS DRAWING PLUS ANY BUILDING AND ZONING REGULATIONS PROVIDED BY THE JURISDICTION WHERE PERMIT IS APPLIED TO.

10. (a) THIS PRODUCT APPROVAL DOCUMENT (P. A. D.) PREPARED BY THIS ENGINEER IS GENERIC AND DOES NOT PROVIDE INFORMATION FOR A SITE SPECIFIC PROJECT; i. e. WHERE THE SITE CONDITIONS DEVIATE FROM THE P. A. D.

(b) CONTRACTOR TO BE RESPONSIBLE FOR THE SELECTION, PURCHASE AND INSTALLATION INCLUDING LIFE SAFETY OF THIS PRODUCT, BASED ON THIS PRODUCT APPROVAL DOCUMENT, PROVIDED HE/SHE DOES NOT DEVIATE FROM THE CONDITIONS DETAILED ON THIS DOCUMENT. CONSTRUCTION SAFETY AT SITE IS THE CONTRACTOR'S RESPONSIBILITY.

(c) THIS PRODUCT APPROVAL DOCUMENT (P. A. D.) WILL BE CONSIDERED INVALID IF ALTERED BY ANY MEANS.

(d) SITE SPECIFIC PROJECTS SHALL BE PREPARED BY A REGISTERED ENGINEER OR ARCHITECT WHICH WILL BECOME THE ENGINEER OF RECORD (E.O.R.) FOR THE PROJECT AND WHO WILL BE RESPONSIBLE FOR THE PROPER USE OF THE P.A.D. ENGINEER OF RECORD, ACTING AS A DELEGATED ENGINEER TO THE P.A.D. ENGINEER, SHALL SUBMIT TO THIS LATTER THE SITE SPECIFIC DRAWINGS FOR REVIEW.

(e) THIS P.A.D. SHALL BEAR THE DATE AND ORIGINAL SEAL AND SIGNATURE OF THE PROFESSIONAL ENGINEER OF RECORD THAT PREPARED IT.

11. SHUTTER MANUFACTURER'S LABEL SHALL BE PLACED ON A READILY AND VISIBLE LOCATION AT PANEL.
ONE LABEL SHALL BE PLACED FOR EVERY OPENING.
LABEL SHALL READ AS FOLLOWS:
JORDAN'S ALUMINUM, INC.
HOLLYWOOD, FL.
MIAMI-DADE COUNTY PRODUCT CONTROL APPROVED.

Approved as complying with the
Florida Building Code
Date 02/22/2007
NOA# 06-1129.07
Miami Dade Product Control
Division
By Helmy A. Melo

JAN 09 2007

F.B.C. (HIGH VELOCITY HURRICANE ZONE)

TILTECO INC.
TILLIT TESTING & ENGINEERING COMPANY
6355 N.W. 36th. St., Ste. 305, VIRGINIA GARDENS, Fl. 33166
Phone : (305)871-1530 . Fax : (305)871-1531
EB-0006719
WALTER A. TILLIT Jr., P. E.
FLORIDA Lic. 44167

550 SERIES 0.050" ALUMINUM STORM PANEL

JORDAN'S ALUMINUM, INC.
5731 DEWEY STREET
HOLLYWOOD, FL. 33023
Phone : (954) 986-1329. Fax : (954) 986-1349

REV. NO	DESCRIPTION	DATE	REV. No	DESCRIPTION	DATE
1	GENERAL	01/08/07	3	-	-
2	-	-	4	-	-

DRAWN BY: M.C.V.
7/14/05 DATE
05-198 DRAWING No
SHEET 1 OF 14

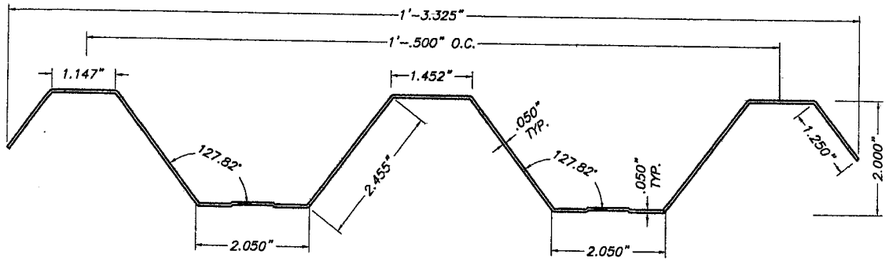

FULL PANEL

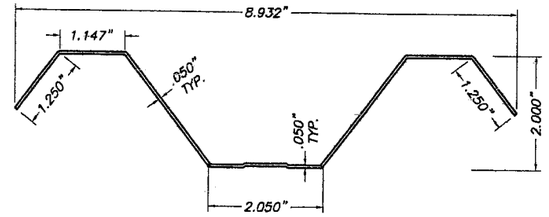

HALF PANEL

① SINGLE STORM PANEL

SCALE : 3/8" = 1"

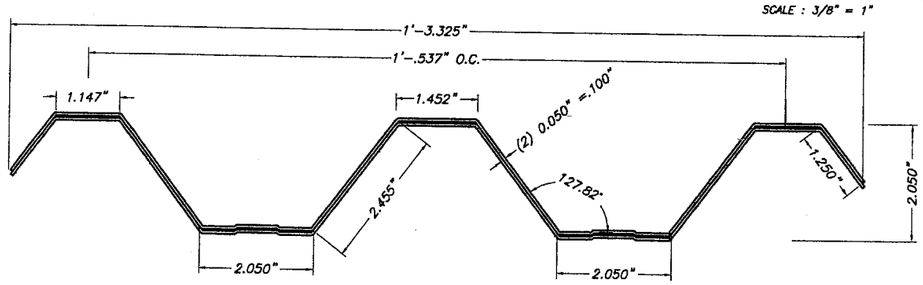

1A DOUBLE STORM PANEL

SCALE : 3/8" = 1"

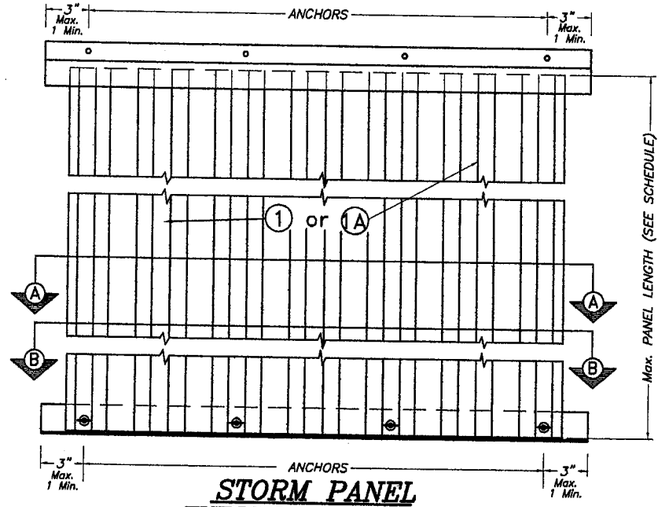

STORM PANEL TYPICAL ELEVATION

N. T. S.

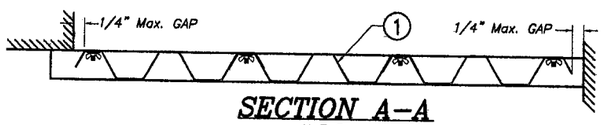

SECTION A-A

N. T. S.

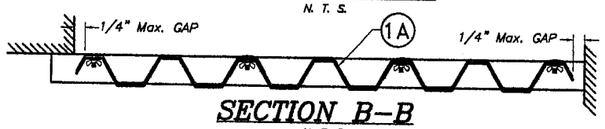

SECTION B-B

N. T. S.

♦ NOTES:

(1) L+: MAXIMUM ALLOWABLE PANEL LENGTH FOR A GIVEN POSITIVE DESIGN LOAD.
L−: MAX. ALLOWABLE PANEL LENGTH FOR A GIVEN NEGATIVE DESIGN LOAD.

(2) PROCEDURE TO OETERMINE MAXIMUM PANEL LENGTH FOR WALL MOUNTINGS OR FLOOR/CEILING:

GIVEN A POSITIVE DESIGN LOAD, DETERMINE MAXIMUM PANEL LENGTH "L+" FROM SCHEDULE.
GIVEN A NEGATIVE DESIGN LOAD, DETERMINE MAXIMUM PANEL LENGTH "L−" FROM SCHEDULE.

FINAL MAXIMUM ALLOWABLE PANEL LENGTH IS EQUAL TO THE MINIMUM DETERMINED PANEL LENGTH BETWEEN "L+" AND "L−".

MINIMUM SEPARATION TO GLASS SCHEDULE FOR SINGLE PANELS:

PANEL LENGTH	UNRESTRAINED PANELS	RESTRAINED PANELS
78" OR LESS	3"	3"
78" TO 90"	3 3/16"	3"
90" TO 108"	3 11/16"	3 1/4"
108" TO 126'	-----	3 3/4"

MAXIMUM DESIGN PRESSURE RATING "W" (p.s.f.) AND CORRESPONDING MAXIMUM SINGLE PANEL ① LENGTH "L" SCHEDULE

SINGLE PANELS ① UNRESTRAINED AT TOP OR BOTTOM WITH TRACKS ②, ③, ④*

MAXIMUM PANEL LENGTH "L+" OR "L−" (ft.) ♦

MAXIMUM DESIGN PRESSURE RATING W (p.s.f.) (+ or −)	CONCRETE & WOOD INSTALLATIONS	
	Max. PANEL LENGTH L+ (ft.)	Max. PANEL LENGTH L− (ft.)
40.0	9'-3"	10'-0"
45.0	9'-0"	10'-0"
50.0	8'-9"	10'-0"
55.0	8'-6"	9'-8"
60.0	8'-3"	9'-3"
65.0	-----	8'-10 1/2"
70.0	-----	8'-6 1/2"
75.0	-----	8'-0"

* MAX. DESIGN LOAD & MAXIMUM SINGLE PANEL ① LENGTH FOR INTERNALLY REMOVABLE PANELS AS PER MOUNTING INSTALLATIONS ON SHEET 6 IS + 55.00, − 70.00 p.s.f. W/ 90" MAX. PANEL LENGTH.

SINGLE PANELS ① RESTRAINED AT EACH END WITH TRACKS ⑤, ⑥, ⑦ OR DIRECT MOUNTED AT EACH END

MAXIMUM PANEL LENGTH "L+" OR "L−" (ft.) ♦

MAXIMUM DESIGN PRESSURE RATING W (p.s.f.) (+ or −)	CONCRETE & WOOD INSTALLATIONS	
	Max. PANEL LENGTH L+ (ft.)	Max. PANEL LENGTH L− (ft.)
40.0	9'-8"	10'-6"
45.0	9'-4 1/2"	10'-6"
50.0	9'-2"	10'-6"
55.0	8'-11"	10'-2 1/2"
60.0	8'-9"	9'-9 1/2"
65.0	-----	9'-4 3/4"
70.0	-----	9'-0"
71.0	-----	9'-0"

MAXIMUM DESIGN PRESSURE RATING "W" (p.s.f.) AND CORRESPONDING MAXIMUM DOUBLE PANEL 1A LENGTH "L" SCHEDULE ++

DOUBLE PANELS 1A RESTRAINED AT EACH END WITH TRACK ⑦ OR DIRECT MOUNTED A EACH END

MAXIMUM DESIGN PRESSURE RATING W (p.s.f.)	Max. 1A PANEL LENGTH L (ft.)	MIN. SEPARATION TO GLASS
+42.0, −60.0	13'-0"	3"

Approved as complying with the Florida Building Code
Date 02/22/2007
NOA# 06-1129.07
Miami Dade Product Control Division
By Helmy A. Moh

++ VALID FOR INSTALLATIONS IN CONCRETE OR CONCRETE BLOCK WALL (NOT APPLICABLE TO WOOD).
NOTE: SEE SHEET 7 FOR MOUNTING CONDITIONS PER SECTIONS 8 & 9, PLUS MOUNTING COMBINATION NOTE.

F.B.C. (HIGH VELOCITY HURRICANE ZONE)

JAN 09 2007

TILTECO INC.
TILLIT TESTING & ENGINEERING COMPANY
6355 N.W. 36th. St., Ste. 305, VIRGINIA GARDENS, Fl. 33166
Phone : (305)871-1530 . Fax : (305)871-1531
EB-0006719
WALTER A. TILLIT Jr., P. E.
FLORIDA Lic. 44167

550 SERIES 0.050" ALUMINUM STORM PANEL

JORDAN'S ALUMINUM, INC.
5731 DEWEY STREET
HOLLYWOOD, FL. 33023
Phone : (954) 986-1329. Fax : (954) 986-1349

REV. NO	DESCRIPTION	DATE	REV. No	DESCRIPTION	DATE
1	GENERAL	01/08/07	3	–	–
2	–	–	4	–	–

DRAWN BY: M.C.V.
7/14/05 DATE
05-198 DRAWING No

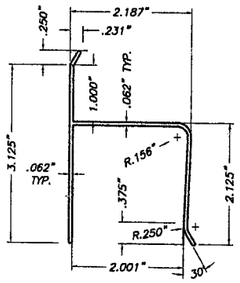

② "h" HEADER
SCALE : 3/8" = 1"

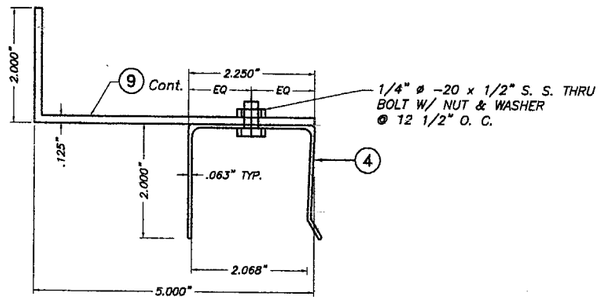

③ 2"BUILD OUT TRACK
SCALE : 3/8" = 1"

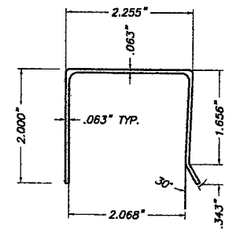

④ "U" HEADER
SCALE : 3/8" = 1"

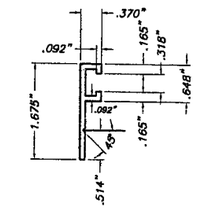

⑤ "F" TRACK
SCALE : 3/8" = 1"

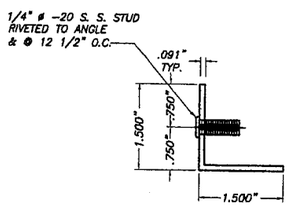

⑥ STUDDED ANGLE
SCALE : 3/8" = 1"

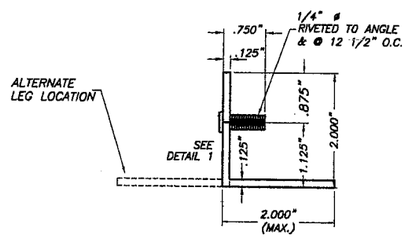

⑦ 2"x2"(MAX.)x1/8" ANGLE WITH STUD
SCALE : 3/8" = 1"

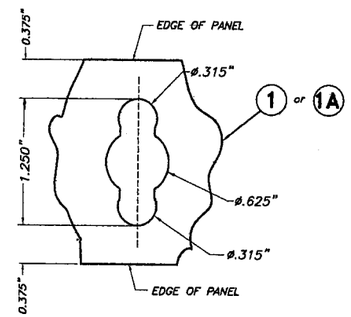

⑧ KEY HOLE AT PANEL
SCALE : 3/8" = 1"

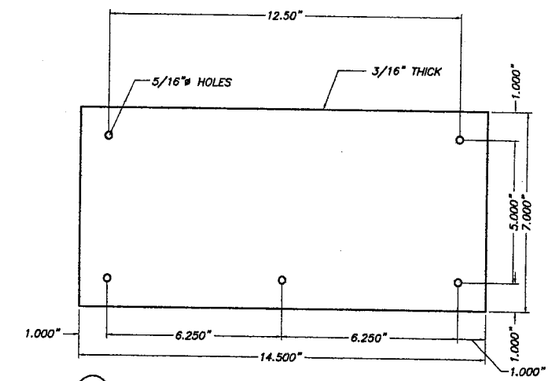

⑩ INTERIOR REMOVABLE PANEL PLATE
SCALE : 1/8" = 1"

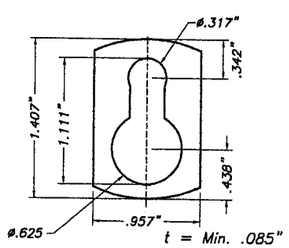

⑧A KEY HOLE WASHER
3105-H154 Alum. ALLOY
SCALE : 3/8" = 1"

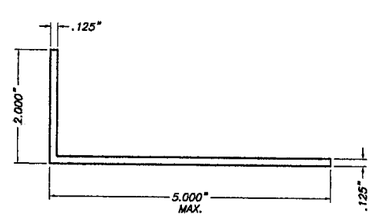

⑨ B.O. ANGLE
SCALE : 3/8" = 1"

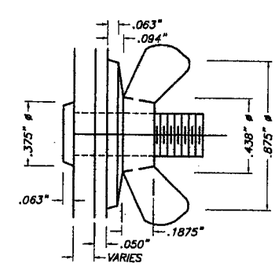

DETAIL 1: STUD W/ WING NUT
SCALE : 3/8" = 1"

Approved as complying with the Florida Building Code
Date 02/22/2007
NOA# 06-1129.07
Miami Dade Product Control Division
By Helmy A. Mahr

COMPONENTS

JAN 09 2007

F.B.C. (HIGH VELOCITY HURRICANE ZONE)

TILTECO INC.
TILLIT TESTING & ENGINEERING COMPANY
6355 N.W. 36th, St., Ste. 305, VIRGINIA GARDENS, Fl. 33166
Phone : (305)871-1530 . Fax : (305)871-1531
EB-0006719
WALTER A. TILLIT Jr., P. E.
FLORIDA Lic. 44167

550 SERIES 0.050" ALUMINUM STORM PANEL

JORDAN'S ALUMINUM, INC.
5731 DEWEY STREET
HOLLYWOOD, FL. 33023
Phone : (954) 986-1329. Fax : (954) 986-1349

REV. NO	DESCRIPTION	DATE	REV. No	DESCRIPTION	DATE
1	GENERAL	01/08/07	3	–	–
2	–	–	4	–	–

DRAWN BY: M.C.V.
7/14/05
DATE
05-198
DRAWING No
SHEET 3 OF 14

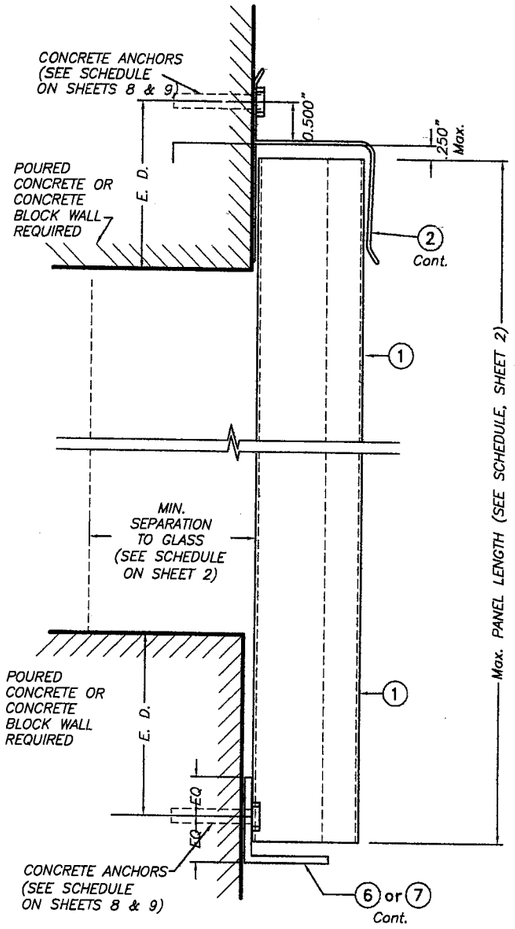

SECTION @ ANCHOR

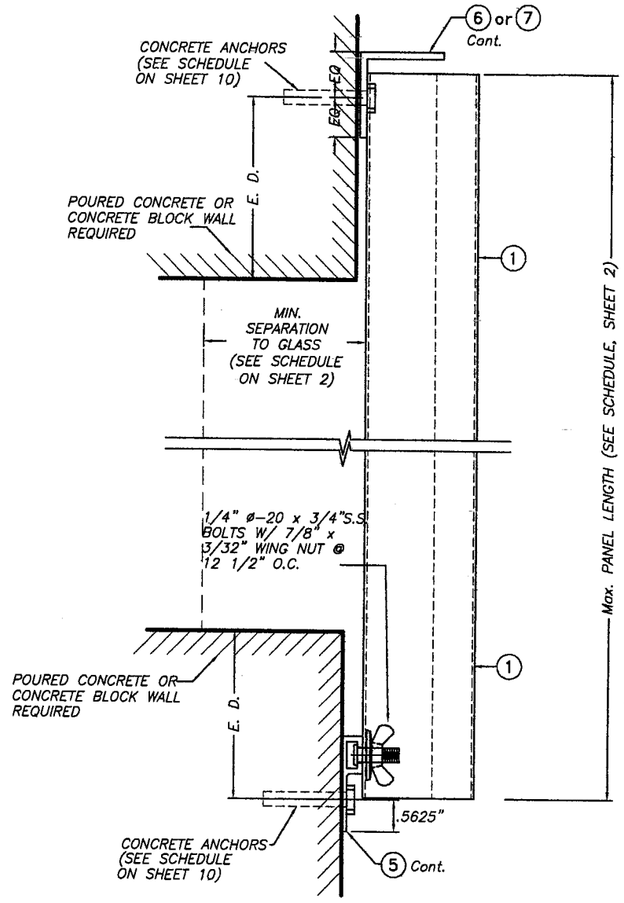

WALL MOUNTING INSTALLATION
SECTION 2

SCALE : 3/8" = 1"

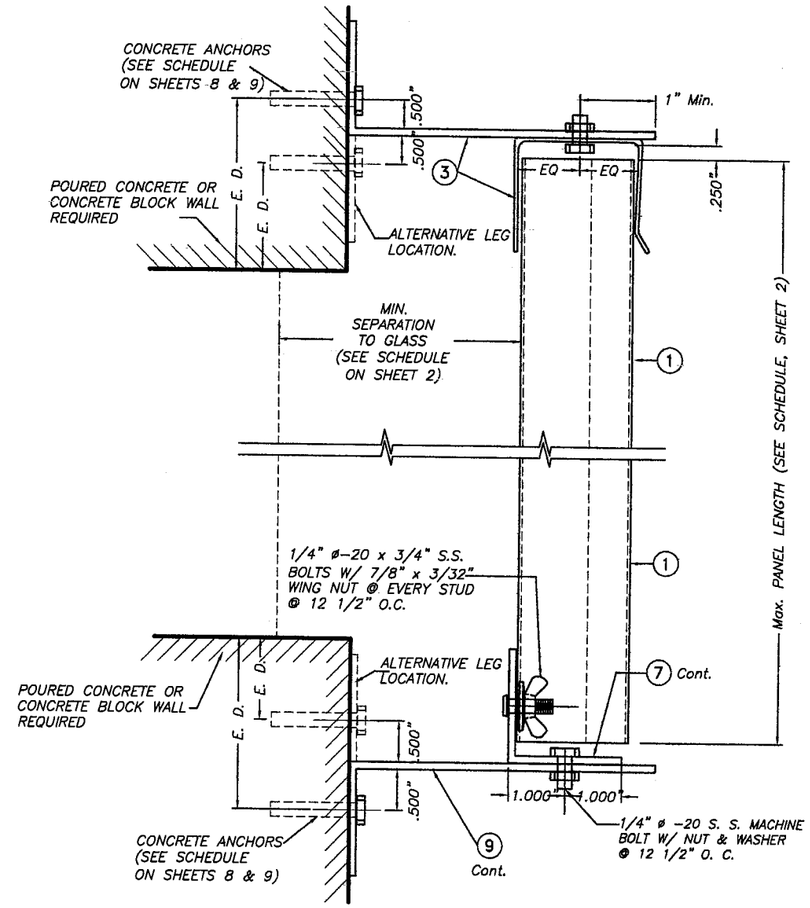

BUILD OUT INSTALLATION
SECTION 3

SCALE : 3/8" = 1"

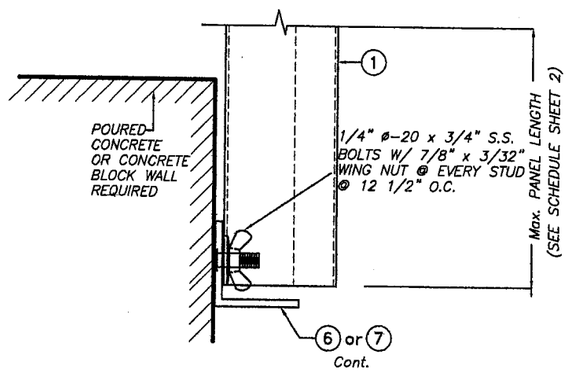

SECTION @ STUD

WALL MOUNTING INSTALLATION
SECTION 1

SCALE : 3/8" = 1"

NOTE : DETAIL OF SECTION @ STUD VALID ALSO FOR WALL MOUNTING INSTALLATION – SECTION 2 (TOP)

E. D. = EDGE DISTANCE (SEE SCHEDULE ON SHEETS 8, 9 & 10)

NOTE FOR COMBINATION OF SECTIONS :

WALL MOUNTING SECTIONS CAN BE COMBINED IN ANY WAY TO SUIT ANY INSTALLATION.

Approved as complying with the Florida Building Code
Date 02/22/2007
NOA# 06-1129.07
Miami Dade Product Control Division
By Helmy A. Melo

JAN 09 2007

F.B.C. (HIGH VELOCITY HURRICANE ZONE)

TILTECO INC.
TILLIT TESTING & ENGINEERING COMPANY
6355 N.W. 36th. St., Ste. 305, VIRGINIA GARDENS, Fl. 33166
Phone : (305)871-1530 . Fax : (305)871-1531
EB-0006719
WALTER A. TILLIT Jr., P. E.
FLORIDA Lic. 44167

550 SERIES 0.050" ALUMINUM STORM PANEL

JORDAN'S ALUMINUM, INC.
5731 DEWEY STREET
HOLLYWOOD, FL. 33023
Phone : (954) 986-1329. Fax : (954) 986-1349

REV. NO	DESCRIPTION	DATE	REV. No	DESCRIPTION	DATE
1	GENERAL	01/08/07	3	–	–
2	–	–	4	–	–

DRAWN BY: M.C.V.
7/14/05 DATE
05-198 DRAWING No
SHEET 4 OF 14

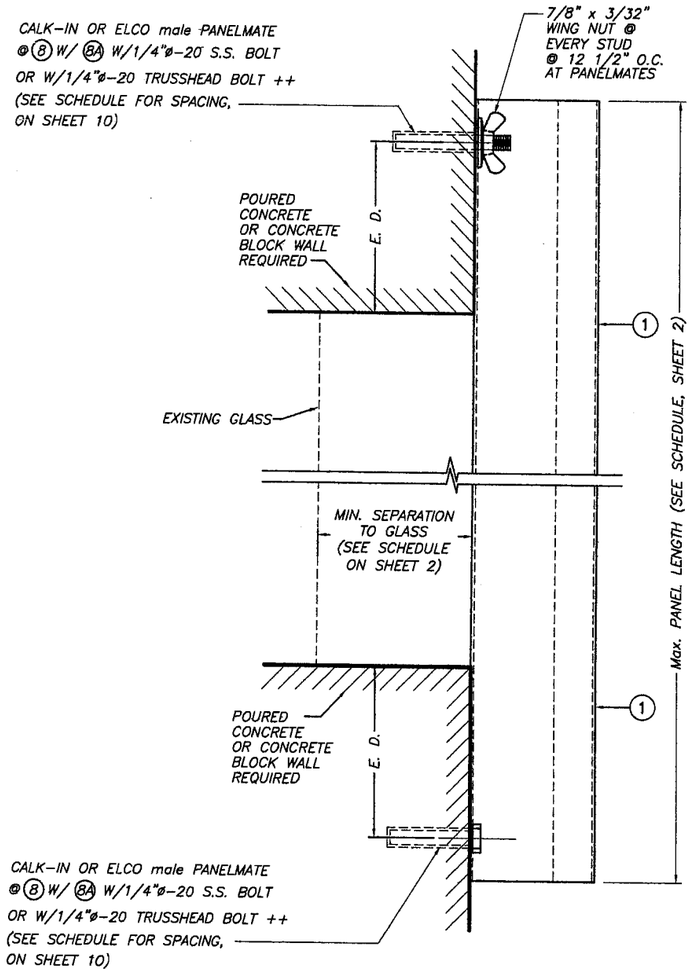

DIRECT WALL MOUNTING INSTALLATION – SECTION 4

SCALE : 3/8" = 1"

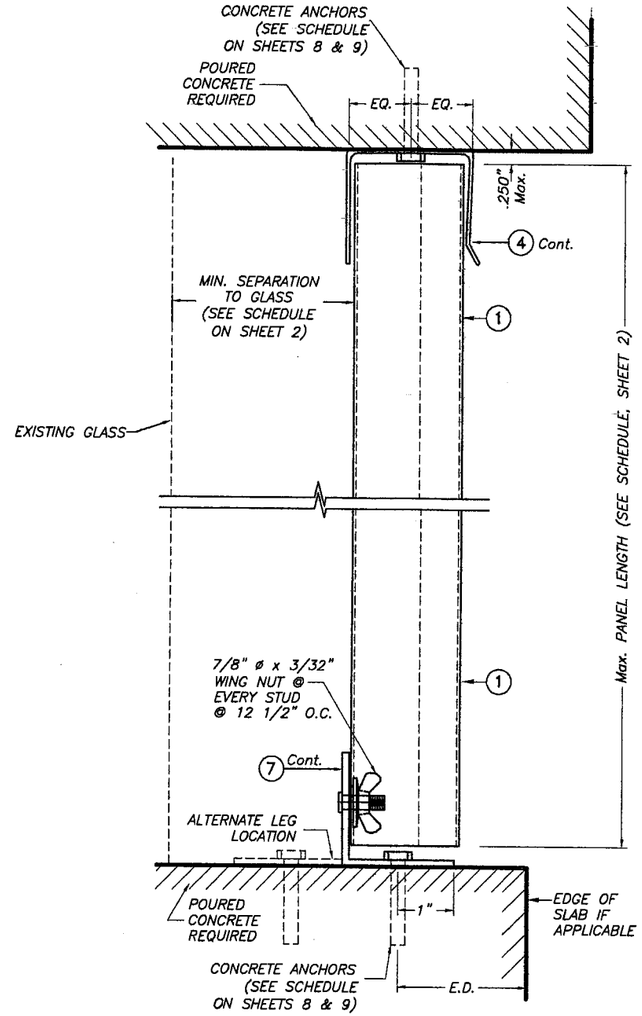

CEILING & FLOOR MOUNTING INSTALLATION SECTION 5

SCALE : 3/8" = 1"

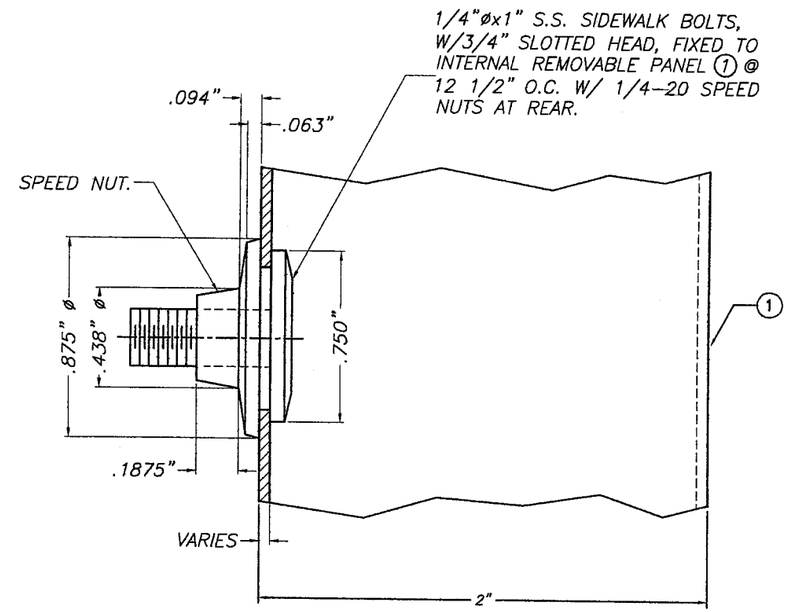

DETAIL 1 – INSTALLATION OF 1/4"x1" SIDEWALK BOLTS @ REMOVABLE PANEL

SCALE: 1/2" = 1"

Approved as complying with the Florida Building Code
Date 02/22/2007
NOA# 06-1129.07
Miami Dade Product Control Division
By Helmy A. Mele

+ +
BOLTS OR TRUSS HEAD BOLTS ARE 1/2"øx1/8" THICK HEAD MACHINE SCREW W/LENGTH AS PER NOTES A.2 & B.2 (SHEET 1)

E. D. = EDGE DISTANCE (SEE SCHEDULE ON SHEETS 8, 9 &10)

NOTE FOR COMBINATION OF SECTIONS :

WALL/FLOOR/CEILING MOUNTING SECTIONS CAN BE COMBINED IN ANY WAY TO SUIT ANY INSTALLATION.

F.B.C. (HIGH VELOCITY HURRICANE ZONE)

JAN 09 2007

TILTECO INC.
TILLIT TESTING & ENGINEERING COMPANY
6355 N.W. 36th. St., Ste. 305, VIRGINIA GARDENS, Fl. 33166
Phone : (305)871-1530 , Fax : (305)871-1531
EB-0006719
WALTER A. TILLIT Jr., P. E.
FLORIDA Lic. 44167

550 SERIES 0.050" ALUMINUM STORM PANEL

JORDAN'S ALUMINUM, INC.
5731 DEWEY STREET
HOLLYWOOD, FL. 33023
Phone : (954) 986-1329. Fax : (954) 986-1349

REV. NO	DESCRIPTION	DATE	REV. No	DESCRIPTION	DATE
1	GENERAL	01/08/07	3	–	–
2	–	–	4	–	–

DRAWN BY: M.C.V.

7/14/05
DATE

05-198
DRAWING No

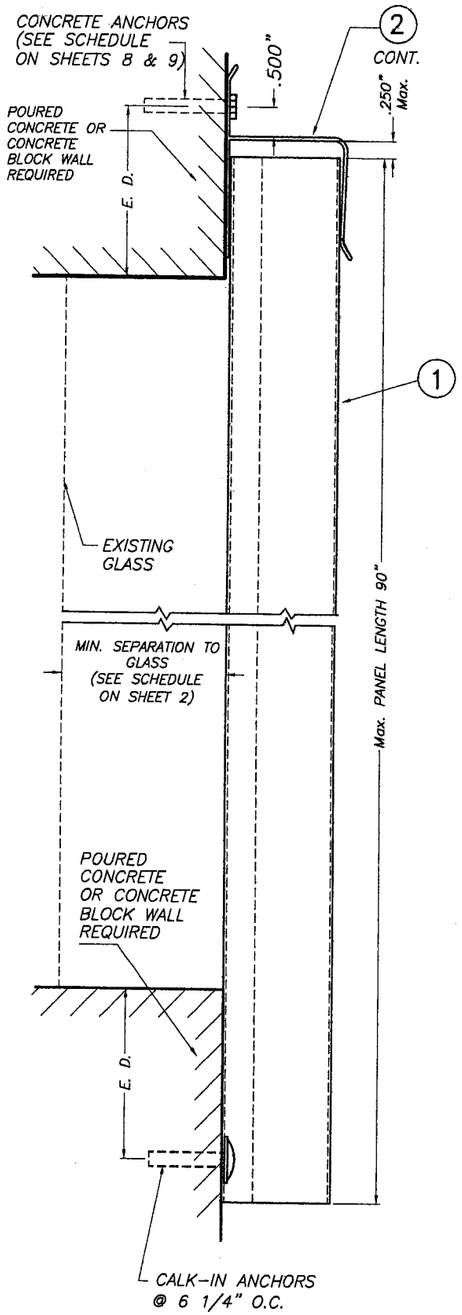

SECTION 6A

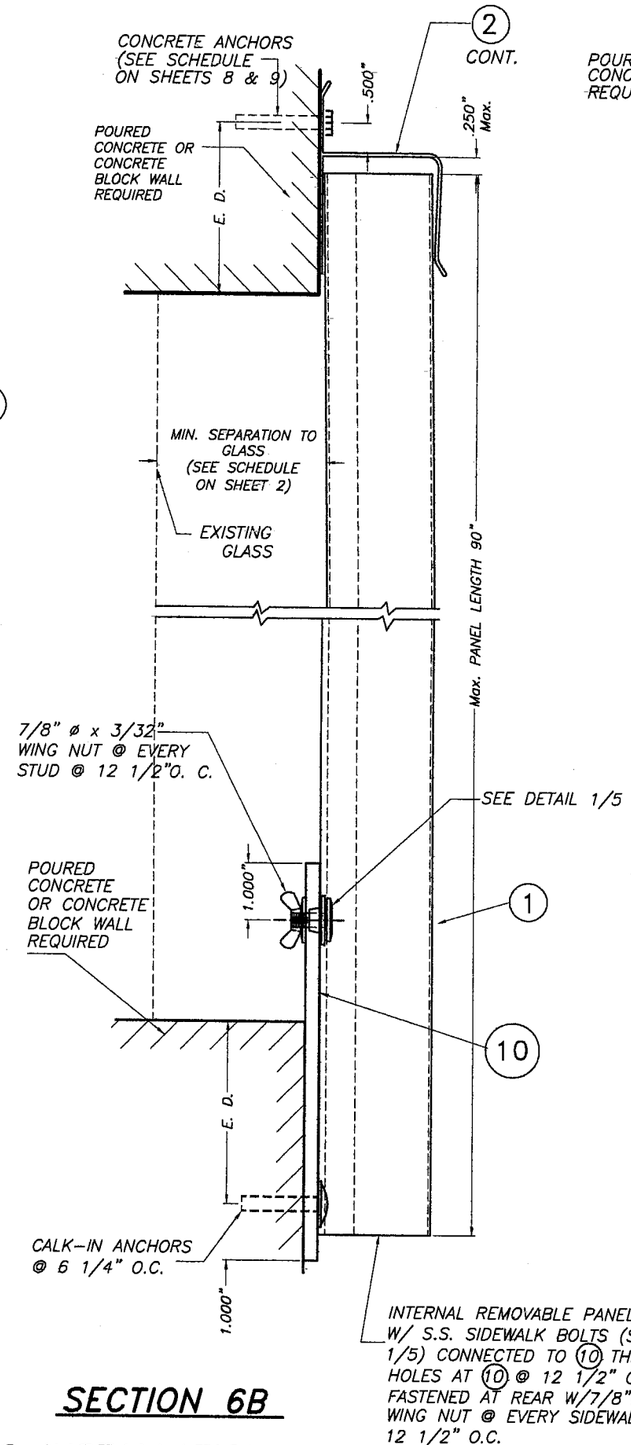

SECTION 6B

WALL MOUNTING INSTALLATIONS

SECTIONS 6 (MAX.DESIGN LOAD +55,-70 p.s.f.)

SCALE: 3/8" = 1"

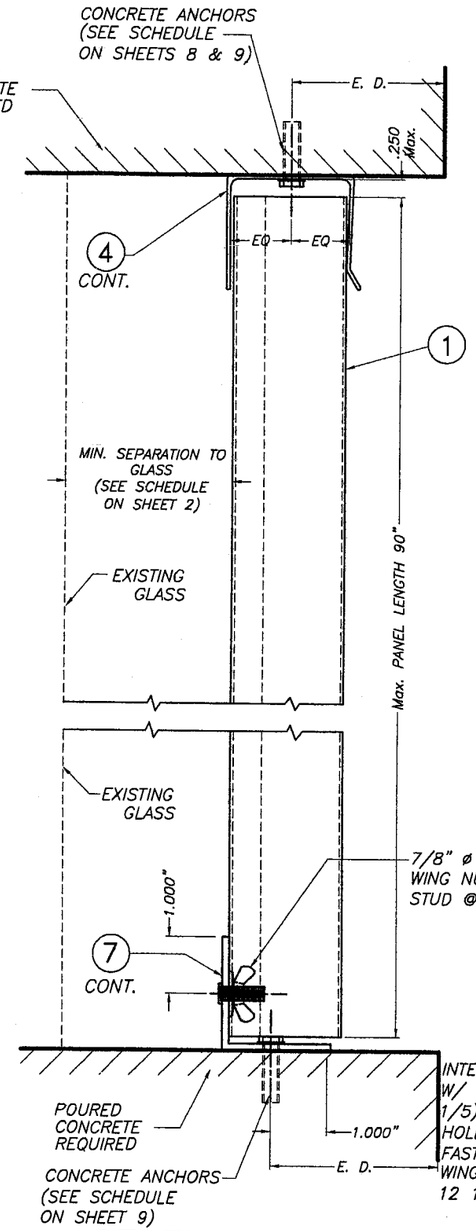

SECTION 7A

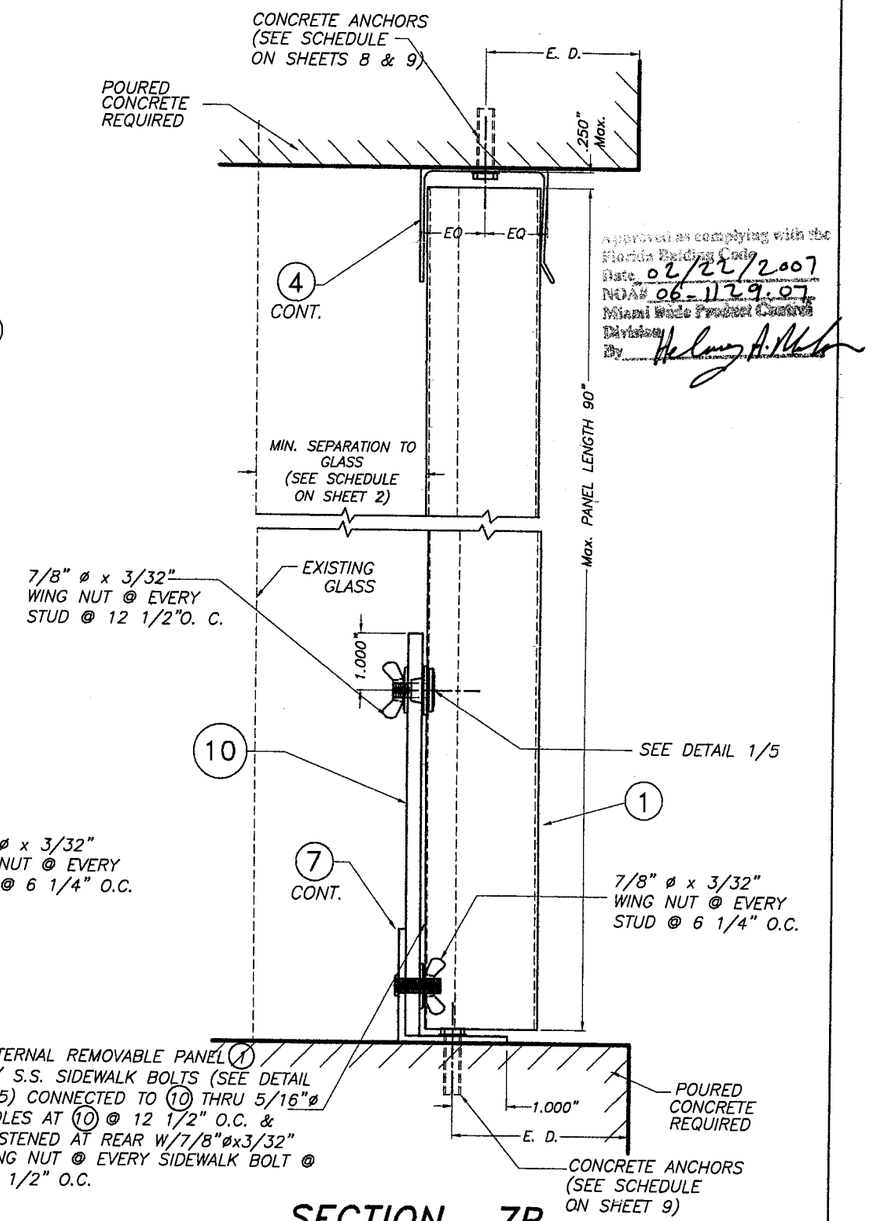

SECTION 7B

Approved as complying with the Florida Building Code
Date 01/22/2007
NOA# 06-1129.07
Miami Dade Product Control Division
By

WALL MOUNTING INSTALLATIONS

SECTIONS 7 (MAX.DESIGN LOAD +55,-70 p.s.f.)

SCALE: 3/8" = 1"

F.B.C. (HIGH VELOCITY HURRICANE ZONE)

JAN 09 2007

TILTECO INC.
TILLIT TESTING & ENGINEERING COMPANY
6355 N.W. 36th. St. Ste. 305, VIRGINIA GARDENS, Fl. 33166
Phone : (305)871-1530 . Fax : (305)871-1531
EB-0006719
WALTER A. TILLIT Jr., P. E.
FLORIDA Lic. 44167

550 SERIES 0.050" ALUMINUM STORM PANEL

JORDAN'S ALUMINUM, INC.
5731 DEWEY STREET
HOLLYWOOD, FL. 33023
Phone : (954) 986-1329. Fax : (954) 986-1349

REV. NO	DESCRIPTION	DATE	REV. No	DESCRIPTION	DATE
1	GENERAL	01/08/07	3	–	–
2	–	–	4	–	–

DRAWN BY: M.C.V.
7/14/05 DATE
05-198 DRAWING No
SHEET 6 OF 14

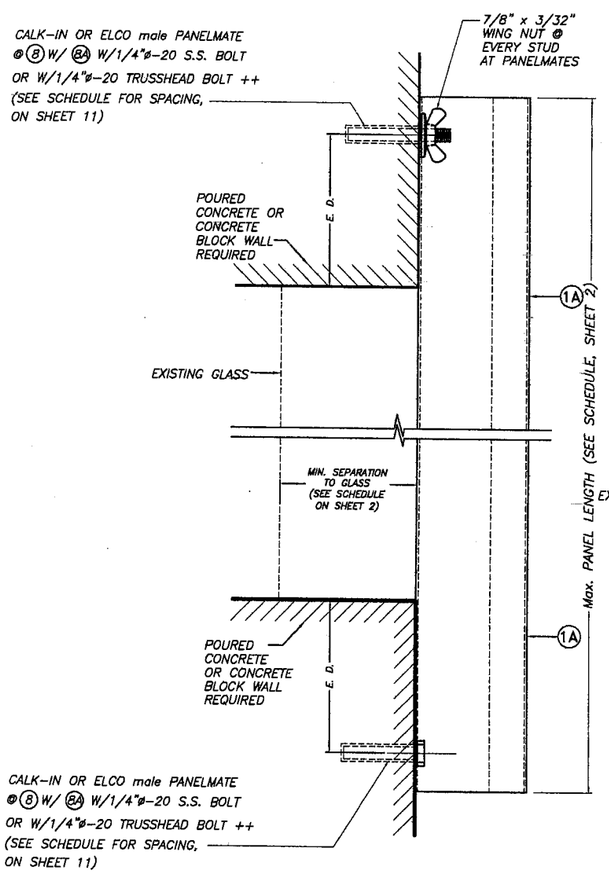

DIRECT WALL MOUNTING INSTALLATION – SECTION 8

SCALE : 3/16" = 1"

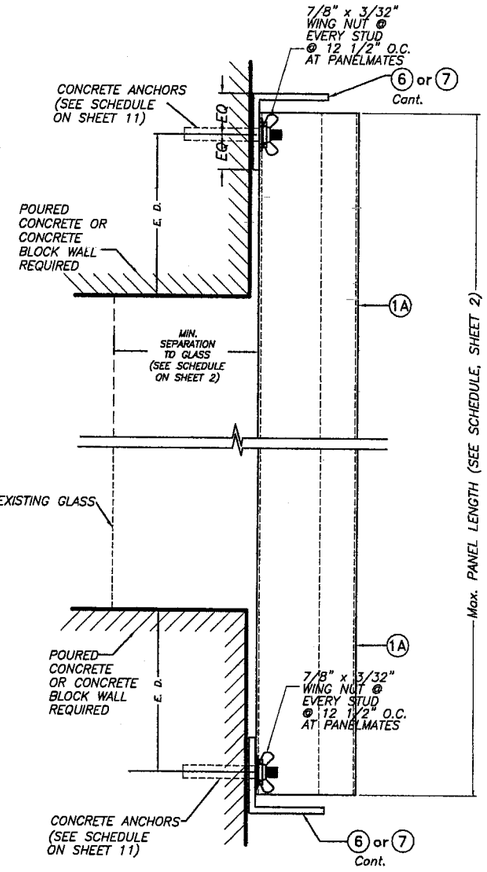

WALL MOUNTING INSTALLATION SECTION 9

SCALE : 3/16" = 1"

DOUBLE PANEL 1A

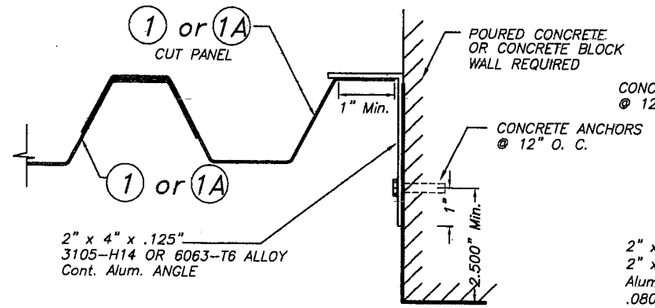

CASE A (Plan)

SCALE: 1/4" = 1"

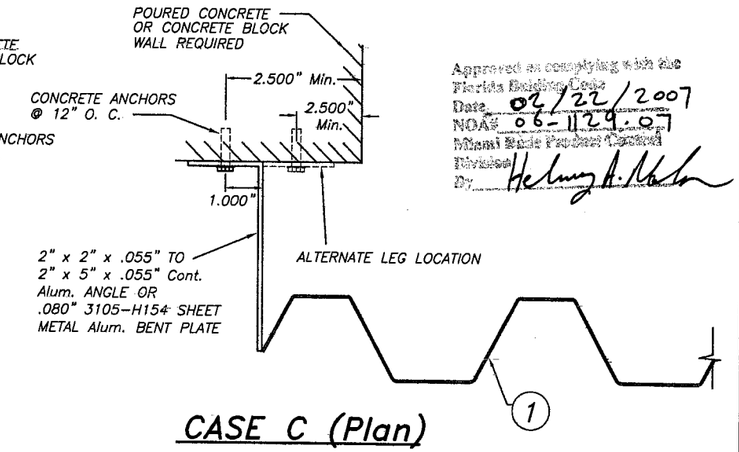

CASE C (Plan)

SCALE: 1/4" = 1"

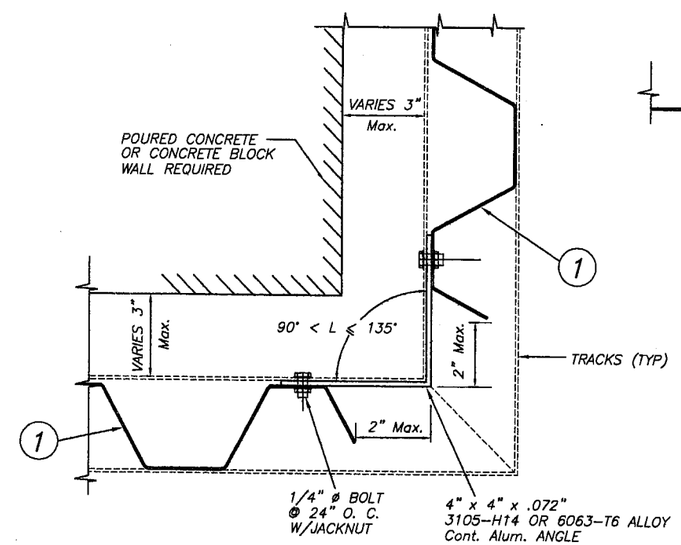

CASE B (Plan)

SCALE: 1/4" = 1"

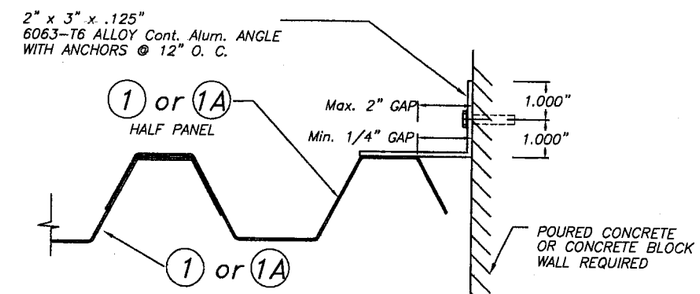

CASE D (Plan)

SCALE: 1/4" = 1"

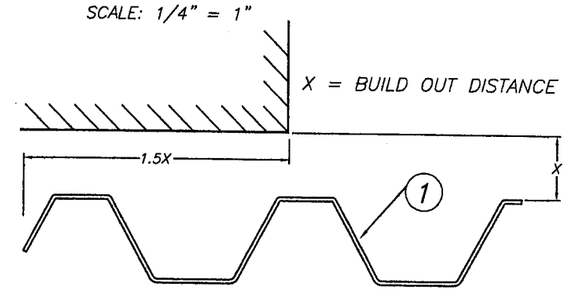

CASE E (Plan)

SCALE: 1/4" = 1"

END CLOSURES DETAILS

Approved as complying with the Florida Building Code
Date 02/22/2007
NOAC 06-1129.07
Miami-Dade Product Control Division
By: Helmy A. Nakhla

+ + BOLTS OR TRUSS HEAD BOLTS ARE 1/2"øx1/8" THICK HEAD MACHINE SCREW W/LENGTH AS PER NOTES A.2 & B.2 (SHEET 1)

E. D. = EDGE DISTANCE (SEE SCHEDULE ON SHEET 11)

NOTE FOR COMBINATION OF SECTIONS :

WALL MOUNTING SECTIONS CAN BE COMBINED IN ANY WAY TO SUIT ANY INSTALLATION.

JAN 09 2007

F.B.C. (HIGH VELOCITY HURRICANE ZONE)

TILTECO INC.
TILLIT TESTING & ENGINEERING COMPANY
6355 N.W. 36th. St., Ste. 305, VIRGINIA GARDENS, FL. 33166
Phone : (305)871-1530 . Fax : (305)871-1531
EB-0006719
WALTER A. TILLIT Jr., P. E.
FLORIDA Lic. 44167

550 SERIES 0.050" ALUMINUM STORM PANEL

JORDAN'S ALUMINUM, INC.
5731 DEWEY STREET
HOLLYWOOD, FL. 33023
Phone : (954) 986-1329. Fax : (954) 986-1349

REV. NO	DESCRIPTION	DATE	REV. No	DESCRIPTION	DATE
1	GENERAL	01/08/07	3	–	–
2	–	–	4	–	–

DRAWN BY: M.C.V.

7/14/05 DATE

05-198 DRAWING No

SHEET 7 OF 14

MAXIMUM DESIGN PRESSURE RATING "W" (p.s.f.) AND CORRESPONDING MAXIMUM ANCHOR SPACING
SCHEDULE FOR **UNRESTRAINED SINGLE PANELS** ① FOR INSTALLATIONS IN CONCRETE AND CONCRETE BLOCK STRUCTURES

MAXIMUM NEGATIVE DESIGN LOAD W– (p.s.f.)	MAXIMUM ANCHORS SPACING FOR E. D. = 3 1/2"*						APPLICABLE TO SECTIONS # & ANY COMBINATION OF THEM	MAXIMUM PANEL LENGTH "L" (ft.)
	TAPCONS		CALK–IN		PANELMATES			
	TO CONCRETE	TO MASONRY	TO CONCRETE	TO MASONRY	TO CONCRETE	TO MASONRY		
40 OR LESS	9"	9"	9"	9"	9"	9"	1 (TOP)	6'–0" OR LESS
	12 1/2"	12 1/2"	12 1/2"	12 1/2"	12 1/2"	12 1/2"	1 (BOTTOM)	
	9"	9"	9"	9"	9"	9"	3 (TOP)	
	9"	9"	9"	9"	9"	9"	3 (BOTTOM)	
	9"	N/A	9"	N/A	9"	N/A	5 (TOP)	
	9"	N/A	9"	N/A	9"	N/A	5 (BOTTOM)	
	9"	4 1/2"	9"	5"	9"	6"	1 (TOP)	> 6'–0" UP TO 10'–0"
	12 1/2"	11 1/2"	12 1/2"	12 1/2"	12 1/2"	12 1/2"	1 (BOTTOM)	
	9"	9"	9"	9"	9"	9"	3 (TOP)	
	9"	9"	9"	9"	9"	9"	3 (BOTTOM)	
	9"	N/A	9"	N/A	9"	N/A	5 (TOP)	
	9"	N/A	9"	N/A	9"	N/A	5 (BOTTOM)	
	9"	8 1/2"	9"	9"	9"	9"	6A/6B (TOP)	7'–6" OR LESS
	N/A	N/A	6 1/4"	6 1/4"	6 1/4"	6 1/4"	6A (BOTTOM)	
	N/A	N/A	6 1/4"	6 1/4"	6 1/4"	6 1/4"	6B (BOTTOM)	
	9"	N/A	9"	N/A	9"	N/A	7A/7B (TOP)	
	6 1/4"	N/A	6 1/4"	N/A	6 1/4"	N/A	7A (BOTTOM)	
	5 1/2"	N/A	4 1/2"	N/A	6 1/2"	N/A	7B (BOTTOM)	
> 40 TO 50	9"	8 1/2"	9"	9"	9"	9"	1 (TOP)	6'–0" OR LESS
	12 1/2"	12 1/2"	12 1/2"	12 1/2"	12 1/2"	12 1/2"	1 (BOTTOM)	
	9"	9"	9"	9"	9"	9"	3 (TOP)	
	9"	9"	9"	9"	9"	9"	3 (BOTTOM)	
	9"	N/A	9"	N/A	9"	N/A	5 (TOP)	
	9"	N/A	9"	N/A	9"	N/A	5 (BOTTOM)	
	9"	3"	7"	3 1/2"	9"	4"	1 (TOP)	> 6'–0" UP TO 10'–0"
	12 1/2"	9"	12 1/2"	10 1/2"	12 1/2"	12 1/2"	1 (BOTTOM)	
	9"	9"	9"	9"	9"	9"	3 (TOP)	
	9"	9"	9"	9"	9"	9"	3 (BOTTOM)	
	9"	N/A	9"	N/A	9"	N/A	5 (TOP)	
	9"	N/A	8 1/2"	N/A	9"	N/A	5 (BOTTOM)	
	9"	5"	9"	5 1/2"	9"	7"	6A/6B (TOP)	> 6'–0" UP TO 7'–6"
	N/A	N/A	6 1/4"	6 1/4"	6 1/4"	6 1/4"	6A (BOTTOM)	
	N/A	N/A	6 1/4"	6 1/4"	6 1/4"	6 1/4"	6B (BOTTOM)	
	9"	N/A	9"	N/A	9"	N/A	7A/7B (TOP)	
	6 1/4"	N/A	6 1/4"	N/A	6 1/4"	N/A	7A (BOTTOM)	
	4 1/2"	N/A	3 1/2"	N/A	5"	N/A	7B (BOTTOM)	

MAXIMUM NEGATIVE DESIGN LOAD W– (p.s.f.)	MAXIMUM ANCHORS SPACING FOR E. D. = 3 1/2"*						APPLICABLE TO SECTIONS # & ANY COMBINATION OF THEM	MAXIMUM PANEL LENGTH "L" (ft.)
	TAPCONS		CALK–IN		PANELMATES			
	TO CONCRETE	TO MASONRY	TO CONCRETE	TO MASONRY	TO CONCRETE	TO MASONRY		
> 50 TO 55	9"	6 1/2"	9"	7 1/2"	9"	9"	1 (TOP)	6'–0" OR LESS
	12 1/2"	12 1/2"	12 1/2"	12 1/2"	12 1/2"	12 1/2"	1 (BOTTOM)	
	9"	9"	9"	9"	9"	9"	3 (TOP)	
	9"	9"	9"	9"	9"	9"	3 (BOTTOM)	
	9"	N/A	9"	N/A	9"	N/A	5 (TOP)	
	9"	N/A	9"	N/A	9"	N/A	5 (BOTTOM)	
	8"	N/A	6 1/2"	3"	8 1/2"	3 1/2"	1 (TOP)	> 6'–0" UP TO 9'–8"
	12 1/2"	8 1/2"	12 1/2"	9 1/2"	12 1/2"	11 1/2"	1 (BOTTOM)	
	9"	8 1/2"	8 1/2"	9"	9"	9"	3 (TOP)	
	9"	8 1/2"	9"	9"	9"	9"	3 (BOTTOM)	
	9"	N/A	9"	N/A	9"	N/A	5 (TOP)	
	9"	N/A	8"	N/A	9"	N/A	5 (BOTTOM)	
	9"	4"	9"	4 1/2"	9"	5 1/2"	6A/6B (TOP)	> 6'–0" UP TO 7'–6"
	N/A	N/A	6 1/4"	6 1/4"	6 1/4"	6 1/4"	6A (BOTTOM)	
	N/A	N/A	6 1/4"	6 1/4"	6 1/4"	6 1/4"	6B (BOTTOM)	
	9"	N/A	9"	N/A	9"	N/A	7A/7B (TOP)	
	6 1/4"	N/A	6 1/4"	N/A	6 1/4"	N/A	7A (BOTTOM)	
	4 1/2"	N/A	3 1/2"	N/A	4 1/2"	N/A	7B (BOTTOM)	
> 55 TO 60	9"	5 1/2"	9"	6"	9"	7 1/2"	1 (TOP)	6'–0" OR LESS
	12 1/2"	12 1/2"	12 1/2"	12 1/2"	12 1/2"	12 1/2"	1 (BOTTOM)	
	9"	9"	9"	9"	9"	9"	3 (TOP)	
	9"	9"	9"	9"	9"	9"	3 (BOTTOM)	
	9"	N/A	9"	N/A	9"	N/A	5 (TOP)	
	9"	N/A	9"	N/A	9"	N/A	5 (BOTTOM)	
	7 1/2"	N/A	6"	N/A	8"	3 1/2"	1 (TOP)	> 6'–0" UP TO 9'–3"
	12 1/2"	8"	9"	9 1/2"	12 1/2"	11"	1 (BOTTOM)	
	9"	8"	9"	9"	9"	9"	3 (TOP)	
	9"	8"	9"	9"	9"	9"	3 (BOTTOM)	
	9"	N/A	9"	N/A	9"	N/A	5 (TOP)	
	9"	N/A	8"	N/A	9"	N/A	5 (BOTTOM)	
	9"	3 1/2"	8 1/2"	4"	9"	5"	6A/6B (TOP)	> 6'–0" UP TO 7'–6"
	N/A	N/A	6 1/4"	6 1/4"	6 1/4"	6 1/4"	6A (BOTTOM)	
	N/A	N/A	6 1/4"	6 1/4"	6 1/4"	6 1/4"	6B (BOTTOM)	
	9"	N/A	9"	N/A	9"	N/A	7A/7B (TOP)	
	6 1/4"	N/A	6 1/4"	N/A	6 1/4"	N/A	7A (BOTTOM)	
	3 1/2"	N/A	3"	N/A	4"	N/A	7B (BOTTOM)	

* MAXIMUM ANCHOR SPACINGS ARE VALID FOR 3 1/2" EDGE DISTANCE. FOR E. D. LESS THAN 3 1/2", REDUCE ANCHOR SPACING BY MULTIPLYING SPACING SHOWN ON SCHEDULE BY THE FOLLOWING FACTORS. FOR THIS OPERATION TO BE POSIBLE, REDUCED SPACING OBTAINED USING FACTOR SHALL NOT BE LESS THAN MINIMUM SPACING INDICATED FOR EACH ANCHOR TYPE AT ANCHORS LEGEND.

ACTUAL E. D.	FACTOR	
	TAPCON OR PANELMATE	CALK–IN
3"	.86	.75
2 1/2"	.71	.50
2"	.50	–

ANCHORS LEGEND

ANCHOR TYPE	Min. ANCHOR SPACING
TAPCON OR PANELMATE	3.0"
CALK–IN	2.5"

E. D. = EDGE DISTANCE

Approved as complying with the Florida Building Code
Date 02/22/2007
NOA# 06-1129.07
Miami Dade Product Control Division
By

F.B.C. (HIGH VELOCITY HURRICANE ZONE)

JAN 09 2007

TILTECO INC.
TILLIT TESTING & ENGINEERING COMPANY
6355 N.W. 36th. St., Ste. 305, VIRGINIA GARDENS, Fl. 33166
Phone : (305)871-1530 . Fax : (305)871-1531
EB-0006719
WALTER A. TILLIT Jr., P. E.
FLORIDA Lic. 44167

550 SERIES 0.050" ALUMINUM STORM PANEL

JORDAN'S ALUMINUM, INC.
5731 DEWEY STREET
HOLLYWOOD, FL. 33023
Phone : (954) 986-1329. Fax : (954) 986-1349

REV. NO	DESCRIPTION	DATE	REV. No	DESCRIPTION	DATE
1	GENERAL	01/08/07	3	–	–
2	–	–	4	–	–

DRAWN BY: M.C.V.

7/14/05 DATE

05–198 DRAWING No

MAXIMUM DESIGN PRESSURE RATING "W" (p.s.f.) AND CORRESPONDING MAXIMUM ANCHOR SPACING SCHEDULE FOR **UNRESTRAINED SINGLE PANELS** ① FOR INSTALLATIONS IN CONCRETE AND CONCRETE BLOCK STRUCTURES

MAXIMUM NEGATIVE DESIGN LOAD W– (p.s.f.)	MAXIMUM ANCHORS SPACING FOR E. D. = 3 1/2"*						APPLICABLE TO SECTIONS # & ANY COMBINATION OF THEM	MAXIMUM PANEL LENGTH "L" (ft.)
	TAPCONS		CALK–IN		PANELMATES			
	TO CONCRETE	TO MASONRY	TO CONCRETE	TO MASONRY	TO CONCRETE	TO MASONRY		
> 60 TO 65	9"	4 1/2"	9"	5"	9"	6 1/2"	1 (TOP)	6'–0" OR LESS
	12 1/2"	12"	12 1/2"	12 1/2"	12 1/2"	12 1/2"	1 (BOTTOM)	
	9"	9"	9"	9"	9"	9"	3 (TOP)	
	9"	9"	9"	9"	9"	9"	3 (BOTTOM)	
	9"	N/A	9"	N/A	9"	N/A	5 (TOP)	
	9"	N/A	9"	N/A	9"	N/A	5 (BOTTOM)	
	7"	N/A	6"	N/A	7 1/2"	3"	1 (TOP)	> 6'–0" UP TO 8'–10 1/2"
	12 1/2"	8"	12 1/2"	9"	12 1/2"	11"	1 (BOTTOM)	
	9"	8"	9"	9"	9"	9"	3 (TOP)	
	9"	8"	9"	9"	9"	9"	3 (BOTTOM)	
	9"	N/A	9"	N/A	9"	N/A	5 (TOP)	
	9"	N/A	7 1/2"	N/A	9"	N/A	5 (BOTTOM)	
	9"	3"	7 1/2"	3 1/2"	9"	4"	6A/6B (TOP)	> 6'–0" UP TO 7'–6"
	N/A	N/A	6 1/4"	6 1/4"	6 1/4"	6 1/4"	6A (BOTTOM)	
	N/A	N/A	6 1/4"	6 1/4"	6 1/4"	6 1/4"	6B (BOTTOM)	
	9"	N/A	9"	N/A	9"	N/A	7A/7B (TOP)	
	6 1/4"	N/A	6 1/4"	N/A	6 1/4"	N/A	7A (BOTTOM)	
	3 1/2"	N/A	N/A	N/A	4"	N/A	7B (BOTTOM)	
> 65 TO 70	9"	4"	9"	4 1/2"	9"	5 1/2"	1 (TOP)	6'–0" OR LESS
	12 1/2"	11"	12 1/2"	12 1/2"	12 1/2"	12 1/2"	1 (BOTTOM)	
	9"	9"	9"	9"	9"	9"	3 (TOP)	
	9"	9"	9"	9"	9"	9"	3 (BOTTOM)	
	9"	N/A	9"	N/A	9"	N/A	5 (TOP)	
	9"	N/A	9"	N/A	9"	N/A	5 (BOTTOM)	
	6 1/2"	N/A	5 1/2"	N/A	7"	3"	1 (TOP)	> 6'–0" UP TO 8'–6 1/2"
	12 1/2"	7 1/2"	12 1/2"	8 1/2"	12 1/2"	10 1/2"	1 (BOTTOM)	
	9"	7 1/2"	9"	8 1/2"	9"	9"	3 (TOP)	
	9"	7 1/2"	9"	8 1/2"	9"	9"	3 (BOTTOM)	
	9"	N/A	9"	N/A	9"	N/A	5 (TOP)	
	8 1/2"	N/A	7 1/2"	N/A	9"	N/A	5 (BOTTOM)	
	8"	N/A	6 1/2	3"	8 1/2"	3 1/2"	6A/6B (TOP)	7'–6" OR LESS
	N/A	N/A	6 1/4"	6 1/4"	6 1/4"	6 1/4"	6A (BOTTOM)	
	N/A	N/A	6 1/4"	6 1/4"	6 1/4"	6 1/4"	6B (BOTTOM)	
	9"	N/A	9"	N/A	9"	N/A	7A/7B (TOP)	
	6 1/4"	N/A	6 1/4"	N/A	6 1/4"	N/A	7A (BOTTOM)	
	3"	N/A	N/A	N/A	3 1/2"	N/A	7B (BOTTOM)	

MAXIMUM NEGATIVE DESIGN LOAD W– (p.s.f.)	MAXIMUM ANCHORS SPACING FOR E. D. = 3 1/2"*						APPLICABLE TO SECTIONS # & ANY COMBINATION OF THEM	MAXIMUM PANEL LENGTH "L" (ft.)
	TAPCONS		CALK–IN		PANELMATES			
	TO CONCRETE	TO MASONRY	TO CONCRETE	TO MASONRY	TO CONCRETE	TO MASONRY		
> 70 TO 75	9"	3 1/2"	8 1/2"	4"	9"	5"	1 (TOP)	6'–0" OR LESS
	12 1/2"	10"	12 1/2"	11 1/2"	12 1/2"	12 1/2"	1 (BOTTOM)	
	9"	9"	9"	9"	9"	9"	3 (TOP)	
	9"	9"	9"	9"	9"	9"	3 (BOTTOM)	
	9"	N/A	9"	N/A	9"	N/A	5 (TOP)	
	9"	N/A	9"	N/A	9"	N/A	5 (BOTTOM)	
	6 1/2"	N/A	5 1/2"	N/A	7"	3"	1 (TOP)	> 6'–0" UP TO 8'–0"
	12 1/2"	7 1/2"	12 1/2"	8 1/2"	12 1/2"	10 1/2"	1 (BOTTOM)	
	9"	7 1/2"	9"	8 1/2"	9"	9"	3 (TOP)	
	9"	7 1/2"	9"	8 1/2"	9"	9"	3 (BOTTOM)	
	9"	N/A	9"	N/A	9"	N/A	5 (TOP)	
	8 1/2"	N/A	7 1/2"	N/A	9"	N/A	5 (BOTTOM)	

* MAXIMUM ANCHOR SPACINGS ARE VALID FOR 3 1/2" EDGE DISTANCE. FOR E. D. LESS THAN 3 1/2", REDUCE ANCHOR SPACING BY MULTIPLYING SPACING SHOWN ON SCHEDULE BY THE FOLLOWING FACTORS. FOR THIS OPERATION TO BE POSIBLE, REDUCED SPACING OBTAINED USING FACTOR SHALL NOT BE LESS THAN MINIMUM SPACING INDICATED FOR EACH ANCHOR TYPE AT ANCHORS LEGEND.

ACTUAL E. D.	FACTOR	
	TAPCON OR PANELMATE	CALK–IN
3"	.86	.75
2 1/2"	.71	.50
2"	.50	–

ANCHORS LEGEND

ANCHOR TYPE	Min. ANCHOR SPACING
TAPCON OR PANELMATE	3.0"
CALK–IN	2.5"

E. D. = EDGE DISTANCE

Approved as complying with the Florida Building Code
Date 02/22/2007
NOA# 06-1129.07
Miami Dade Product Control Division
By Helmy A. Moh

F.B.C. (HIGH VELOCITY HURRICANE ZONE)

JAN 09 2007

TILTECO INC.
TILLIT TESTING & ENGINEERING COMPANY
6355 N.W. 36th. St., Ste. 305, VIRGINIA GARDENS, Fl. 33166
Phone : (305)871-1530 . Fax : (305)871-1531
EB-0006719
WALTER A. TILLIT Jr., P. E.
FLORIDA Lic. 44167

550 SERIES 0.050" ALUMINUM STORM PANEL

JORDAN'S ALUMINUM, INC.
5731 DEWEY STREET
HOLLYWOOD, FL. 33023
Phone : (954) 986-1329. Fax : (954) 986-1349

REV. NO	DESCRIPTION	DATE	REV. No	DESCRIPTION	DATE
1	GENERAL	01/08/07	3	–	–
2	–	–	4	–	–

DRAWN BY: M.C.V.
7/14/05 DATE
05-198 DRAWING No

MAXIMUM DESIGN PRESSURE RATING "W" (p.s.f.) AND CORRESPONDING MAXIMUM ANCHOR SPACING SCHEDULE FOR **RESTRAINED SINGLE PANELS** ① FOR INSTALLATIONS IN CONCRETE AND CONCRETE BLOCK STRUCTURES

MAXIMUM NEGATIVE DESIGN LOAD W– (p.s.f.)	MAXIMUM ANCHORS SPACING FOR E. D. = 3 1/2"*						APPLICABLE TO SECTIONS # & ANY COMBINATION OF THEM	MAXIMUM PANEL LENGTH "L" (ft.)
	TAPCONS		CALK–IN		PANELMATES			
	TO CONCRETE	TO MASONRY	TO CONCRETE	TO MASONRY	TO CONCRETE	TO MASONRY		
40 OR LESS	12 1/2"	12 1/2"	12 1/2"	12 1/2"	12 1/2"	12 1/2"	2 (TOP)	6'–0" OR LESS
	12 1/2"	12 1/2"	12 1/2"	12 1/2"	12 1/2"	12 1/2"	2 (BOTTOM)	
	N/A	N/A	12 1/2"	12 1/2"	12 1/2"	12 1/2"	4 (TOP)	
	N/A	N/A	12 1/2"	12 1/2"	12 1/2"	12 1/2"	4 (BOTTOM)	
	12 1/2"	11"	12 1/2"	12 1/2"	12 1/2"	12 1/2"	2 (TOP)	> 6'–0" UP TO 10'–6"
	12 1/2"	11"	12 1/2"	12 1/2"	12 1/2"	12 1/2"	2 (BOTTOM)	
	N/A	N/A	12 1/2"	12 1/2"	12 1/2"	12 1/2"	4 (TOP)	
	N/A	N/A	12 1/2"	12 1/2"	12 1/2"	12 1/2"	4 (BOTTOM)	
>40 TO 50	12 1/2"	12 1/2"	12 1/2"	12 1/2"	12 1/2"	12 1/2"	2 (TOP)	6'–0" OR LESS
	12 1/2"	12 1/2"	12 1/2"	12 1/2"	12 1/2"	12 1/2"	2 (BOTTOM)	
	N/A	N/A	12 1/2"	12 1/2"	12 1/2"	12 1/2"	4 (TOP)	
	N/A	N/A	12 1/2"	12 1/2"	12 1/2"	12 1/2"	4 (BOTTOM)	
	12 1/2"	8 1/2"	12 1/2"	10"	12 1/2"	12"	2 (TOP)	> 6'–0" UP TO 10'–6"
	12 1/2"	8 1/2"	12 1/2"	10"	12 1/2"	12"	2 (BOTTOM)	
	N/A	N/A	12 1/2"	6 1/4"	12 1/2"	6 1/4"	4 (TOP)	
	N/A	N/A	12 1/2"	6 1/4"	12 1/2"	6 1/4"	4 (BOTTOM)	
>50 TO 55	12 1/2"	12 1/2"	12 1/2"	12 1/2"	12 1/2"	12 1/2"	2 (TOP)	6'–0" OR LESS
	12 1/2"	12 1/2"	12 1/2"	12 1/2"	12 1/2"	12 1/2"	2 (BOTTOM)	
	N/A	N/A	12 1/2"	12 1/2"	12 1/2"	12 1/2"	4 (TOP)	
	N/A	N/A	12 1/2"	12 1/2"	12 1/2"	12 1/2"	4 (BOTTOM)	
	12 1/2"	8"	12 1/2"	9"	12 1/2"	11"	2 (TOP)	> 6'–0" UP TO 10'–2 1/2"
	12 1/2"	8"	12 1/2"	9"	12 1/2"	11"	2 (BOTTOM)	
	N/A	N/A	12 1/2"	6 1/4"	12 1/2"	6 1/4"	4 (TOP)	
	N/A	N/A	12 1/2"	6 1/4"	12 1/2"	6 1/4"	4 (BOTTOM)	
>55 TO 60	12 1/2"	12 1/2"	12 1/2"	12 1/2"	12 1/2"	12 1/2"	2 (TOP)	6'–0" OR LESS
	12 1/2"	12 1/2"	12 1/2"	12 1/2"	12 1/2"	12 1/2"	2 (BOTTOM)	
	N/A	N/A	12 1/2"	12 1/2"	12 1/2"	12 1/2"	4 (TOP)	
	N/A	N/A	12 1/2"	12 1/2"	12 1/2"	12 1/2"	4 (BOTTOM)	
	12 1/2"	7 1/2"	12 1/2"	9"	12 1/2"	10 1/2"	2 (TOP)	> 6'–0" UP TO 9'–9 1/2"
	12 1/2"	7 1/2"	12 1/2"	9"	12 1/2"	10 1/2"	2 (BOTTOM)	
	N/A	N/A	12 1/2"	6 1/4"	12 1/2"	6 1/4"	4 (TOP)	
	N/A	N/A	12 1/2"	6 1/4"	12 1/2"	6 1/4"	4 (BOTTOM)	

MAXIMUM NEGATIVE DESIGN LOAD W– (p.s.f.)	MAXIMUM ANCHORS SPACING FOR E. D. = 3 1/2"*						APPLICABLE TO SECTIONS # & ANY COMBINATION OF THEM	MAXIMUM PANEL LENGTH "L" (ft.)
	TAPCONS		CALK–IN		PANELMATES			
	TO CONCRETE	TO MASONRY	TO CONCRETE	TO MASONRY	TO CONCRETE	TO MASONRY		
>60 TO 65	12 1/2"	12"	12 1/2"	12 1/2"	12 1/2"	12 1/2"	2 (TOP)	6'–0" OR LESS
	12 1/2"	12"	12 1/2"	12 1/2"	12 1/2"	12 1/2"	2 (BOTTOM)	
	N/A	N/A	12 1/2"	12 1/2"	12 1/2"	12 1/2"	4 (TOP)	
	N/A	N/A	12 1/2"	12 1/2"	12 1/2"	12 1/2"	4 (BOTTOM)	
	12 1/2"	7 1/2"	12 1/2"	8 1/2"	12 1/2"	10"	2 (TOP)	> 6'–0" UP TO 9'–4 3/4"
	12 1/2"	7 1/2"	12 1/2"	8 1/2"	12 1/2"	10"	2 (BOTTOM)	
	N/A	N/A	12 1/2"	6 1/4"	12 1/2"	6 1/4"	4 (TOP)	
	N/A	N/A	12 1/2"	6 1/4"	12 1/2"	6 1/4"	4 (BOTTOM)	
>65 TO 70	12 1/2"	11"	12 1/2"	12 1/2"	12 1/2"	12 1/2"	2 (TOP)	6'–0" OR LESS
	12 1/2"	11"	12 1/2"	12 1/2"	12 1/2"	12 1/2"	2 (BOTTOM)	
	N/A	N/A	12 1/2"	12 1/2"	12 1/2"	12 1/2"	4 (TOP)	
	N/A	N/A	12 1/2"	12 1/2"	12 1/2"	12 1/2"	4 (BOTTOM)	
	12 1/2"	7"	12 1/2"	8"	12 1/2"	10"	2 (TOP)	> 6'–0" UP TO 9'–0"
	12 1/2"	7"	12 1/2"	8"	12 1/2"	10"	2 (BOTTOM)	
	N/A	N/A	12 1/2"	6 1/4"	12 1/2"	6 1/4"	4 (TOP)	
	N/A	N/A	12 1/2"	6 1/4"	12 1/2"	6 1/4"	4 (BOTTOM)	
>70 TO 71	12 1/2"	11"	12 1/2"	12"	12 1/2"	12 1/2"	2 (TOP)	6'–0" OR LESS
	12 1/2"	11"	12 1/2"	12"	12 1/2"	12 1/2"	2 (BOTTOM)	
	N/A	N/A	12 1/2"	6 1/4"	12 1/2"	12 1/2"	4 (TOP)	
	N/A	N/A	12 1/2"	6 1/4"	12 1/2"	12 1/2"	4 (BOTTOM)	
	12 1/2"	7"	12 1/2"	8"	12 1/2"	9 1/2"	2 (TOP)	> 6'–0" UP TO 9'–0"
	12 1/2"	7"	12 1/2"	8"	12 1/2"	9 1/2"	2 (BOTTOM)	
	N/A	N/A	12 1/2"	6 1/4"	12 1/2"	6 1/4"	4 (TOP)	
	N/A	N/A	12 1/2"	6 1/4"	12 1/2"	6 1/4"	4 (BOTTOM)	

* MAXIMUM ANCHOR SPACINGS ARE VALID FOR 3 1/2" EDGE DISTANCE. FOR E. D. LESS THAN 3 1/2", REDUCE ANCHOR SPACING BY MULTIPLYING SPACING SHOWN ON SCHEDULE BY THE FOLLOWING FACTORS. FOR THIS OPERATION TO BE POSIBLE, REDUCED SPACING OBTAINED USING FACTOR SHALL NOT BE LESS THAN MINIMUM SPACING INDICATED FOR EACH ANCHOR TYPE AT ANCHORS LEGEND.

ACTUAL E. D.	FACTOR	
	TAPCON OR PANELMATE	CALK–IN
3"	.86	.75
2 1/2"	.71	.50
2"	.50	–

Approved as complying with the Florida Building Code
Date 02/22/2007
NOA# 06-1129.07
Miami Dade Product Control Division
By Kelly A. Moler

ANCHORS LEGEND

ANCHOR TYPE	Min. ANCHOR SPACING
TAPCON OR PANELMATE	3.0"
CALK–IN	2.5"

E. D. = EDGE DISTANCE

F.B.C. (HIGH VELOCITY HURRICANE ZONE)

JAN 09 2007

TILTECO INC.
TILLIT TESTING & ENGINEERING COMPANY
6355 N.W. 36th. St., Ste. 305, VIRGINIA GARDENS, Fl. 33166
Phone : (305)871–1530 . Fax : (305)871–1531
EB–0006719
WALTER A. TILLIT Jr., P. E.
FLORIDA Lic. 44167

550 SERIES 0.050" ALUMINUM STORM PANEL

JORDAN'S ALUMINUM, INC.
5731 DEWEY STREET
HOLLYWOOD, FL. 33023
Phone : (954) 986–1329. Fax : (954) 986–1349

REV. NO	DESCRIPTION	DATE	REV. No	DESCRIPTION	DATE
1	GENERAL	01/08/07	3	–	–
2	–	–	4	–	–

DRAWN BY: M.C.V.
7/14/05 DATE
05–198 DRAWING No
SHEET 10 OF 14

MAXIMUM DESIGN PRESSURE RATING "W" (p.s.f.) AND CORRESPONDING MAXIMUM ANCHOR SPACING SCHEDULE FOR **RESTRAINED DOUBLE PANELS (1A)** FOR INSTALLATIONS IN CONCRETE AND CONCRETE BLOCK STRUCTURES

MAXIMUM NEGATIVE DESIGN LOAD W– (p.s.f.)	MAXIMUM ANCHORS SPACING FOR E. D. = 3 1/2"*						APPLICABLE TO SECTIONS # & ANY COMBINATION OF THEM	MAXIMUM PANEL LENGTH "L" (ft.)
	TAPCONS		CALK–IN		PANELMATES			
	TO CONCRETE	TO MASONRY	TO CONCRETE	TO MASONRY	TO CONCRETE	TO MASONRY		
+42.0, –60.0 OR LESS	N/A	N/A	6 1/4"	6 1/4"	6 1/4"	6 1/4"	8 (TOP)	13'–0" OR LESS
	N/A	N/A	6 1/4"	6 1/4"	6 1/4"	6 1/4"	8 (BOTTOM)	
	12 1/2"	6"	12 1/2"	6 1/2"	12 1/2"	8"	9 (TOP)	
	12 1/2"	6"	12 1/2"	6 1/2"	12 1/2"	8"	9 (BOTTOM)	

* MAXIMUM ANCHOR SPACINGS ARE VALID FOR 3 1/2" EDGE DISTANCE. FOR E. D. LESS THAN 3 1/2", REDUCE ANCHOR SPACING BY MULTIPLYING SPACING SHOWN ON SCHEDULE BY THE FOLLOWING FACTORS.

FOR THIS OPERATION TO BE POSIBLE, REDUCED SPACING OBTAINED USING FACTOR SHALL NOT BE LESS THAN MINIMUM SPACING INDICATED FOR EACH ANCHOR TYPE AT ANCHORS LEGEND.

ACTUAL E. D.	FACTOR	
	TAPCON OR PANELMATE	CALK–IN
3"	.86	.75
2 1/2"	.71	.50
2"	.50	–

ANCHORS LEGEND

ANCHOR TYPE	Min. ANCHOR SPACING
TAPCON OR PANELMATE	3.0"
CALK–IN	2.5"

E. D. = EDGE DISTANCE

Approved as complying with the Florida Building Code
Date 02/22/2007
NOA# 06-1129.07
Miami-Dade Product Control Division
By

F.B.C. (HIGH VELOCITY HURRICANE ZONE)

TILTECO INC.
TILLIT TESTING & ENGINEERING COMPANY
6355 N.W. 36th. St., Ste. 305, VIRGINIA GARDENS, Fl. 33166
Phone : (305)871–1530 , Fax : (305)871–1531
EB–0006719
WALTER A. TILLIT Jr., P. E.
FLORIDA Lic. 44167

JAN 09 2007

550 SERIES 0.050" ALUMINUM STORM PANEL

JORDAN'S ALUMINUM, INC.
5731 DEWEY STREET
HOLLYWOOD, FL. 33023
Phone : (954) 986–1329, Fax : (954) 986–1349

REV. NO	DESCRIPTION	DATE	REV. No	DESCRIPTION	DATE
1	GENERAL	01/08/07	3	–	–
2	–	–	4	–	–

DRAWN BY: M.C.V.

7/14/05 DATE

05–198 DRAWING No

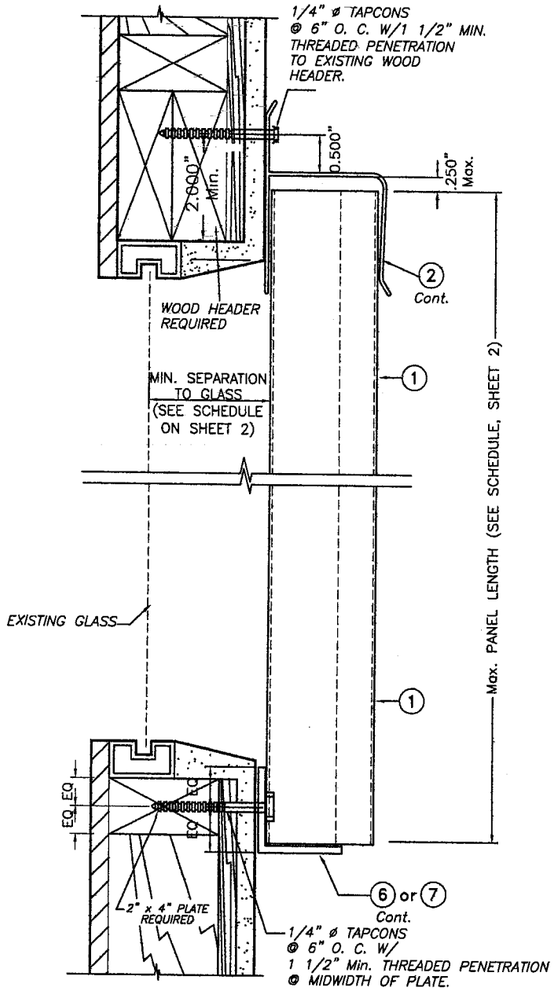

SECTION @ ANCHOR

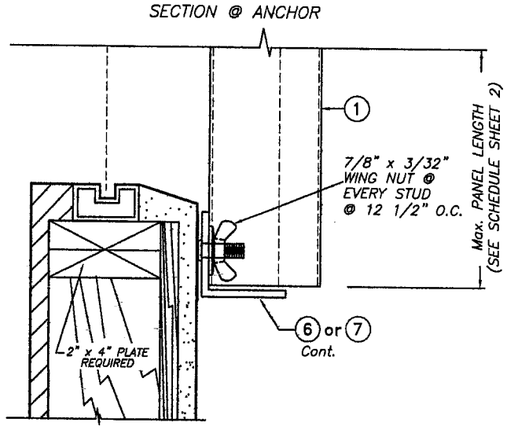

SECTION @ STUD

ALTERNATIVE 1

SCALE : 3/8" = 1"

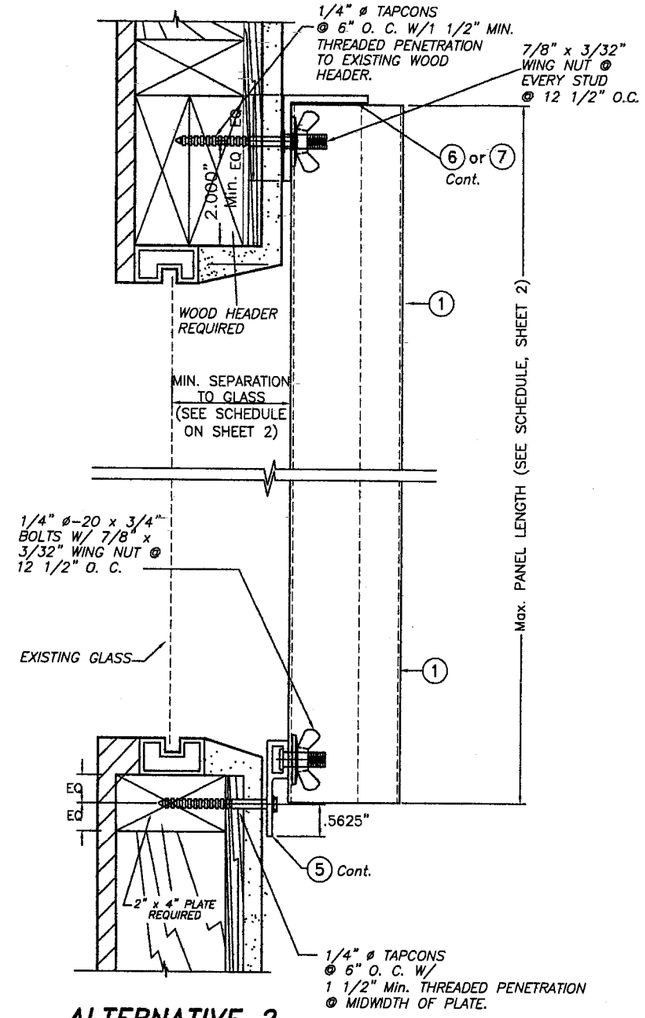

ALTERNATIVE 2

SCALE : 3/8" = 1"

NOTES:

1. INSTALLATIONS ARE ONLY VALID FOR DESIGN WIND LOADS AND PANEL LENGTHS AS PER SCHEDULES ON SHEET 2
2. FOR NEW WOOD FRAME CONSTRUCTION: WOOD MEMBERS TO BE SOUTHERN PINE No. 2, W/ SPECIFIC DENSITY OF 0.55 OR EQUAL.

NOTE FOR COMBINATION OF SECTIONS :

WALL MOUNTING SECTIONS CAN BE COMBINED IN ANY WAY TO SUIT ANY INSTALLATION.

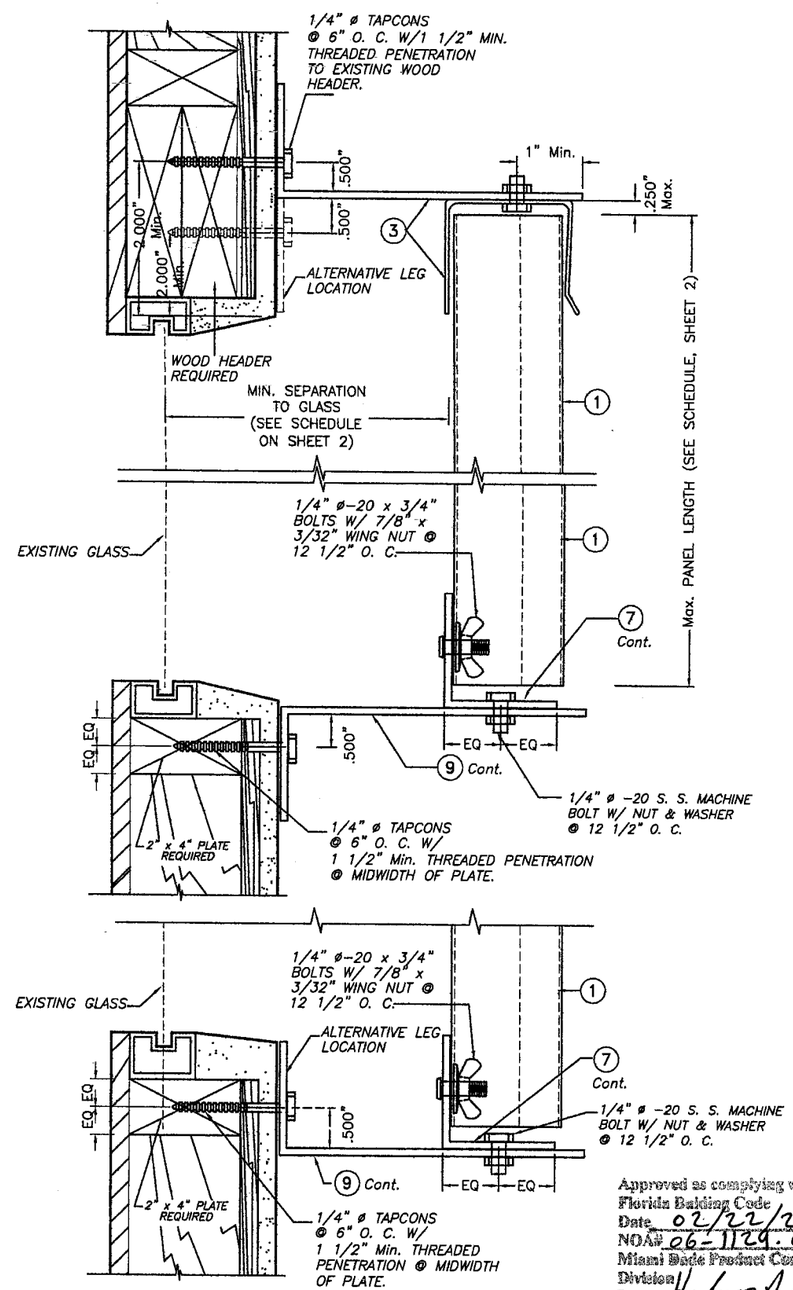

ALTERNATIVE 3

SCALE : 3/8" = 1"

Approved as complying with the Florida Building Code
Date 02/22/2007
NOA# 06-1129.07
Miami Dade Product Control Division
By Helmy A. Nader

F.B.C. (HIGH VELOCITY HURRICANE ZONE)

JAN 09 2007

TILTECO INC.
TILLIT TESTING & ENGINEERING COMPANY
6355 N.W. 36th. St., Ste. 305, VIRGINIA GARDENS, FL 33166
Phone : (305)871-1530 , Fax : (305)871-1531
EB-0006719
WALTER A. TILLIT Jr., P. E.
FLORIDA Lic. 44167

550 SERIES 0.050" ALUMINUM STORM PANEL

JORDAN'S ALUMINUM, INC.
5731 DEWEY STREET
HOLLYWOOD, FL. 33023
Phone : (954) 986-1329. Fax : (954) 986-1349

REV. NO	DESCRIPTION	DATE	REV. No	DESCRIPTION	DATE
1	GENERAL	01/08/07	3	-	-
2	-	-	4	-	-

DRAWN BY: M.C.V.

7/14/05 DATE

05-198 DRAWING No

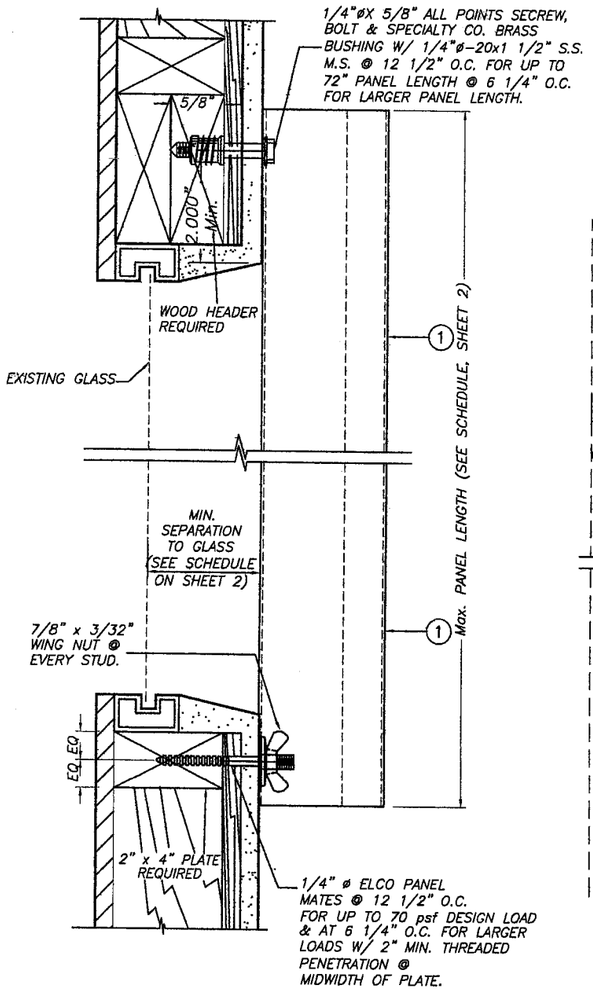

ALTERNATIVE 4

SCALE : 3/8" = 1"

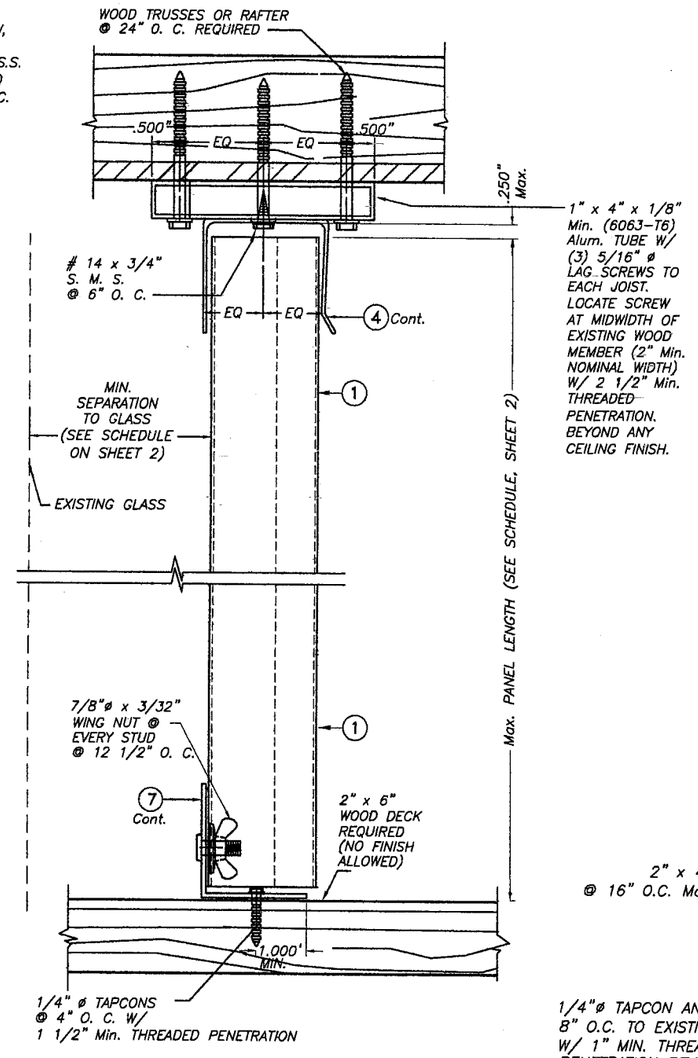

ALTERNATIVE 5

SCALE : 3/8" = 1"

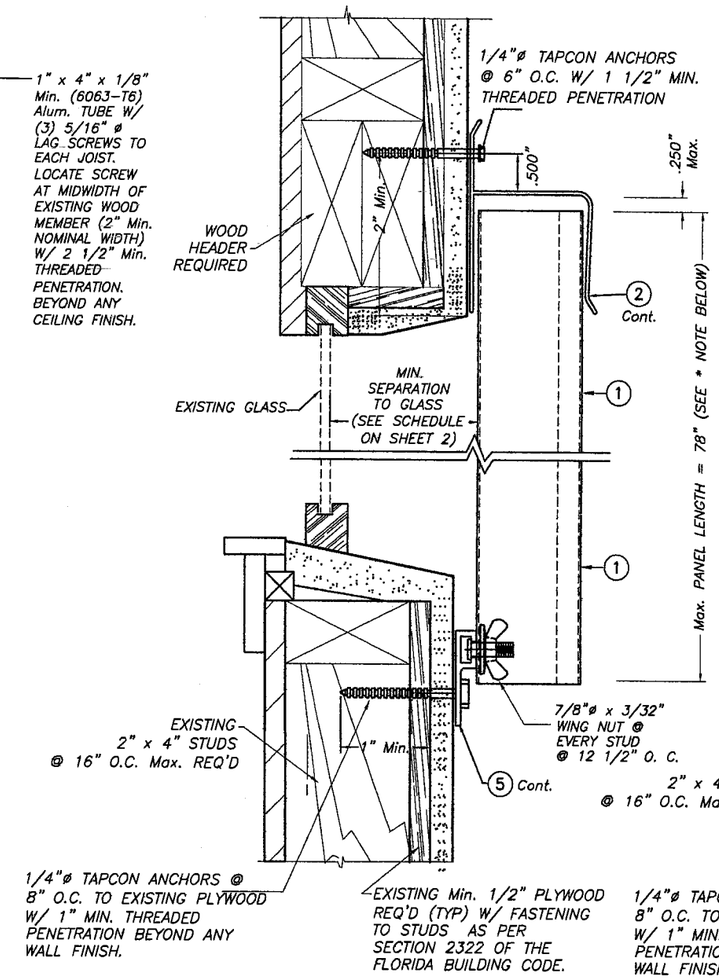

ALTERNATIVE 6

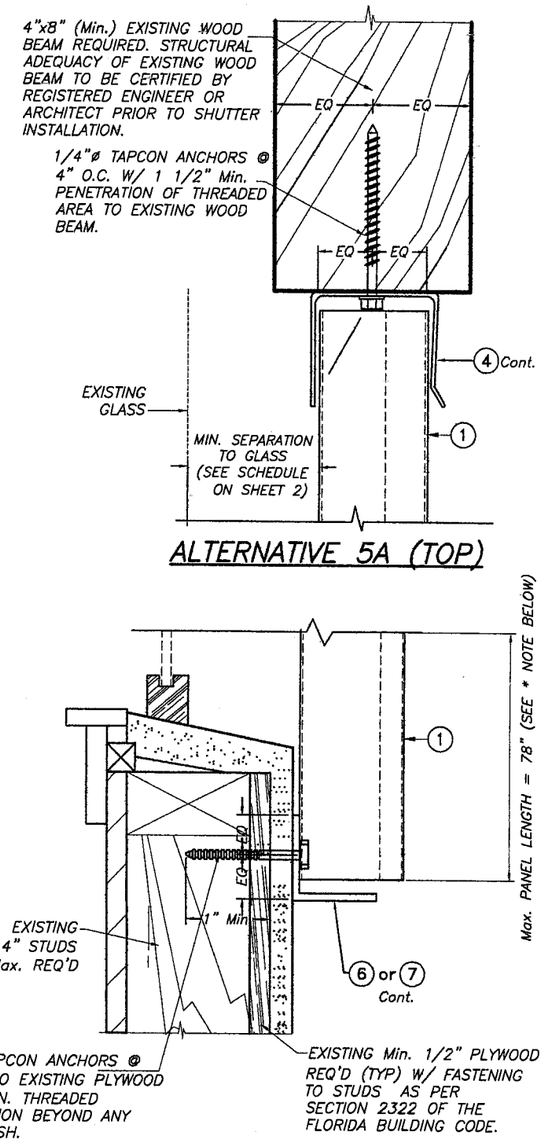

ALTERNATIVE 6A

*VALID FOR Max. +52.00, −63.00 psf. DESIGN LOAD

Approved as complying with the Florida Building Code
Date 02/22/2007
NOA# 06-1129.07
Miami Dade Product Control Division
By

INSTALLATION DETAILS ON EXISTING WOOD BUILDINGS

WALL MOUNTING INSTALLATION

SCALE : 3/8" = 1"

F.B.C. (HIGH VELOCITY HURRICANE ZONE)

NOTE FOR COMBINATION OF SECTIONS :

WALL/FLOOR/CEILING MOUNTING SECTIONS CAN BE COMBINED IN ANY WAY TO SUIT ANY INSTALLATION.

NOTES:

1. INSTALLATIONS ARE ONLY VALID FOR DESIGN WIND LOADS AND PANEL LENGTHS AS PER SCHEDULES ON SHEET 2
2. FOR NEW WOOD FRAME CONSTRUCTION: WOOD MEMBERS TO BE SOUTHERN PINE No. 2, W/ SPECIFIC DENSITY OF 0.55 OR EQUAL.

JAN 09 2007

TILTECO INC.
TILLIT TESTING & ENGINEERING COMPANY
6355 N.W. 36th. St., Ste. 305, VIRGINIA GARDENS, Fl. 33166
Phone : (305)871-1530 , Fax : (305)871-1531
EB-0006719
WALTER A. TILLIT Jr., P. E.
FLORIDA Lic. 44167

550 SERIES 0.050" ALUMINUM STORM PANEL

JORDAN'S ALUMINUM, INC.
5731 DEWEY STREET
HOLLYWOOD, FL. 33023
Phone : (954) 986-1329. Fax : (954) 986-1349

REV. NO	DESCRIPTION	DATE	REV. No	DESCRIPTION	DATE
1	GENERAL	01/08/07	3	–	–
2	–	–	4	–	–

DRAWN BY: M.C.V.
7/14/05 DATE
05-198 DRAWING No
SHEET 13 OF 14

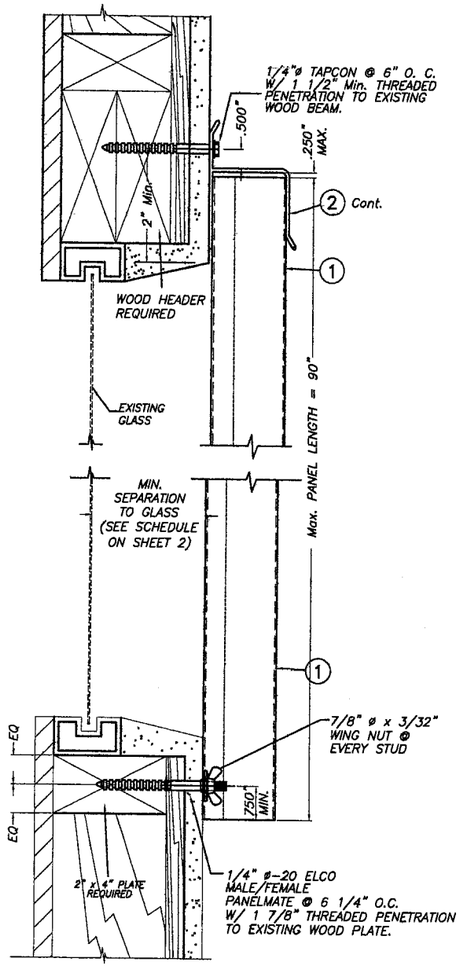

SECTION 7A

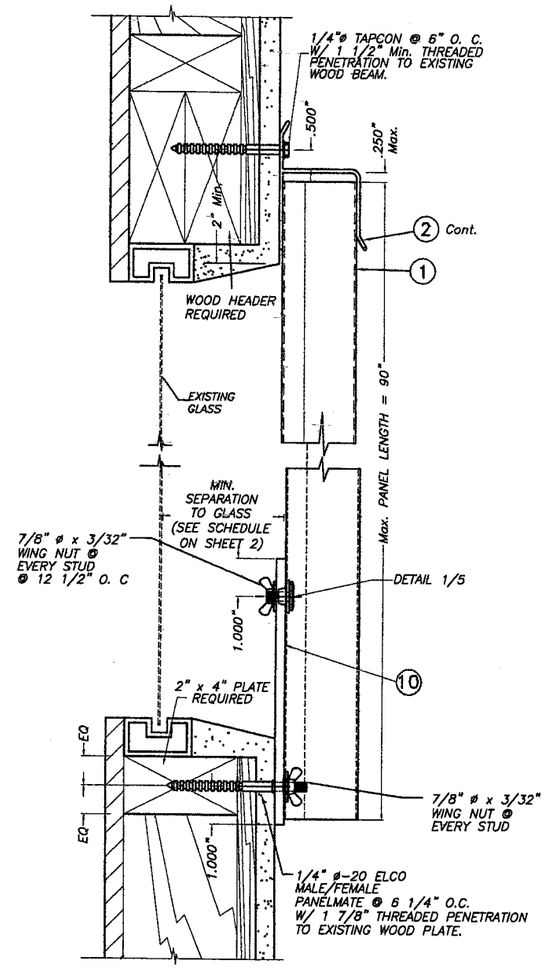

SECTION 7B

WALL MOUNTING INSTALLATIONS
SECTIONS 7 (MAX. DESIGN LOAD +55,-70 p.s.f.)

SCALE: 1/4" = 1"

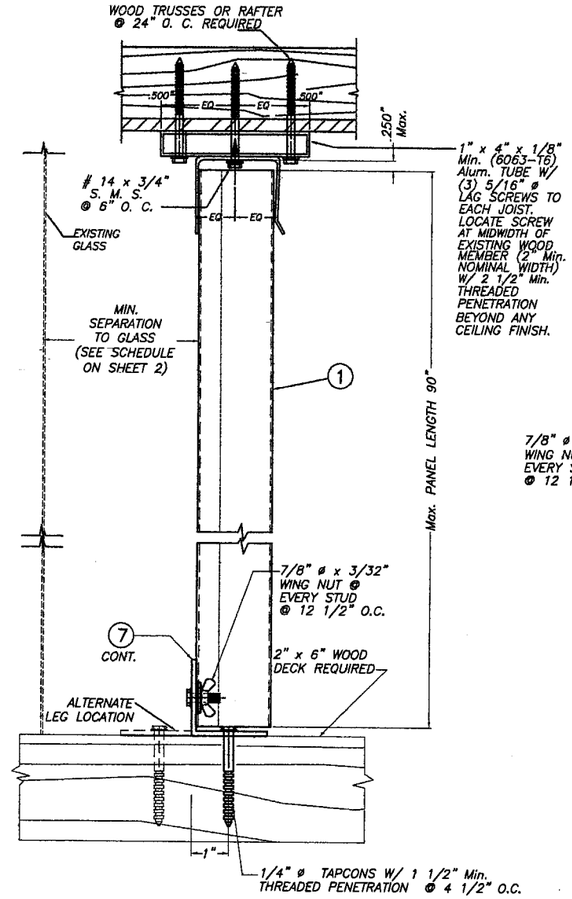

SECTION 8A

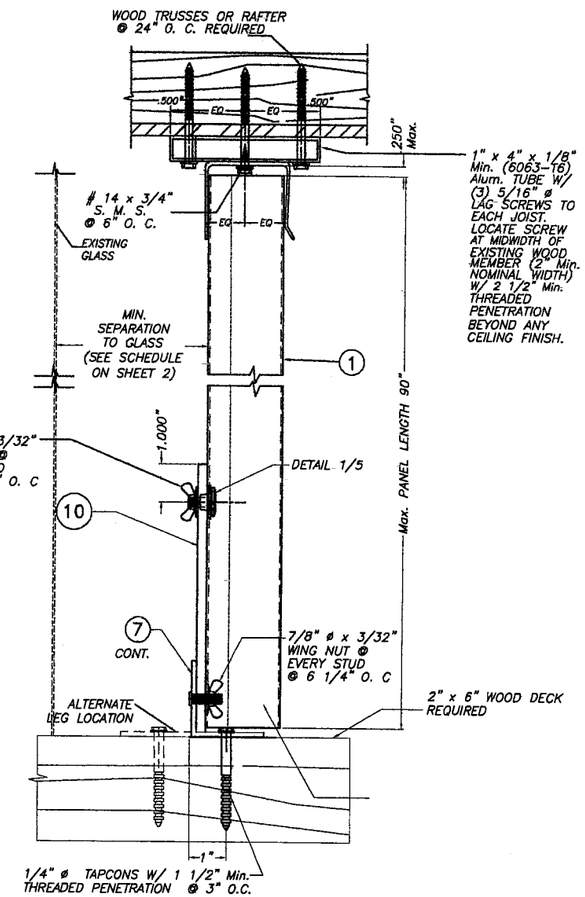

SECTION 8B

CEILING & FLOOR MOUNTING INSTALLATION
SECTIONS 8 (MAX. DESIGN LOAD +55,-70 p.s.f.)

SCALE: 1/4" = 1"

Approved as complying with the Florida Building Code
Date 02/22/2007
NOA# 06-1129.07
Miami Dade Product Control Division
By

INSTALLATION DETAILS ON EXISTING WOOD BUILDINGS

NOTE FOR COMBINATION OF SECTIONS:

WALL MOUNTING SECTIONS CAN BE COMBINED IN ANY WAY TO SUIT ANY INSTALLATION.

NOTES:

1. INSTALLATIONS ARE ONLY VALID FOR DESIGN WIND LOADS AND PANEL LENGTHS AS PER SCHEDULES ON SHEET 2
2. FOR NEW WOOD FRAME CONSTRUCTION: WOOD MEMBERS TO BE SOUTHERN PINE No. 2, W/ SPECIFIC DENSITY OF 0.55 OR EQUAL.

JAN 09 2007

F.B.C. (HIGH VELOCITY HURRICANE ZONE)

TILTECO INC.
TILLIT TESTING & ENGINEERING COMPANY
6355 N.W. 36th. St., Ste. 305, VIRGINIA GARDENS, FL. 33166
Phone : (305)871-1530 , Fax : (305)871-1531
EB-0006719
WALTER A. TILLIT Jr., P. E.
FLORIDA Lic. 44167

550 SERIES 0.050" ALUMINUM STORM PANEL

JORDAN'S ALUMINUM, INC.
5731 DEWEY STREET
HOLLYWOOD, FL. 33023
Phone : (954) 986-1329, Fax : (954) 986-1349

REV. NO	DESCRIPTION	DATE	REV. No	DESCRIPTION	DATE
1	GENERAL	01/08/07	3	-	-
2	-	-	4	-	-

DRAWN BY: M.C.V.

7/14/05 DATE

05-198 DRAWING No

SHEET 14 OF 14