MIAMI-DADE COUNTY

BUILDING CODE COMPLIANCE OFFICE (BCCO)
PRODUCT CONTROL DIVISION

MIAMI-DADE COUNTY, FLORIDA
METRO-DADE FLAGLER BUILDING
140 WEST FLAGLER STREET, SUITE 1603
MIAMI, FLORIDA 33130-1563
(305) 375-2901 FAX (305) 375-2908
www.buldingcodeonline.com

NOTICE OF ACCEPTANCE (NOA)

R.C. Aluminum Industries, Inc.
2805 NW 75th Ave.
Miami, FL 33122

SCOPE:

This NOA is being issued under the applicable rules and regulations governing the use of construction materials. The documentation submitted has been reviewed by Miami-Dade County Product Control Division and accepted by the Board of Rules and Appeals (BORA) to be used in Miami Dade County and other areas where allowed by the Authority Having Jurisdiction (AHJ).

This NOA shall not be valid after the expiration date stated below. The Miami-Dade County Product Control Division (In Miami Dade County) and/or the AHJ (in areas other than Miami Dade County) reserve the right to have this product or material tested for quality assurance purposes. If this product or material fails to perform in the accepted manner, the manufacturer will incur the expense of such testing and the AHJ may immediately revoke, modify, or suspend the use of such product or material within their jurisdiction. BORA reserves the right to revoke this acceptance, if it is determined by Miami-Dade County Product Control Division that this product or material fails to meet the requirements of the applicable building code.

This product is approved as described herein, and has been designed to comply with the Florida Building Code, including the High Velocity Hurricane Zone.

DESCRIPTION: Series "SH 100" Aluminum Single Hung Window – L.M.I.

APPROVAL DOCUMENT: Drawing No. **W04-19**, titled "SH100 Alum Single Hung Window (L.M.I.)", sheets 1 through 4 of 4, dated 03/09/04 with revision B dated 09/13/06, prepared by Al-Farooq Corporation, signed and sealed by Humayoun Farooq, P.E., bearing the Miami-Dade County Product Control Revision stamp with the Notice of Acceptance number and expiration date by the Miami-Dade County Product Control Division.

MISSILE IMPACT RATING: Large and Small Missile Impact Resistant

LABELING: Each unit shall bear a permanent label with the manufacturer's name or logo, city, state and following statement: "Miami-Dade County Product Control Approved", unless otherwise noted herein.

RENEWAL of this NOA shall be considered after a renewal application has been filed and there has been no change in the applicable building code negatively affecting the performance of this product.

TERMINATION of this NOA will occur after the expiration date or if there has been a revision or change in the materials, use, and/or manufacture of the product or process. Misuse of this NOA as an endorsement of any product, for sales, advertising or any other purposes shall automatically terminate this NOA. Failure to comply with any section of this NOA shall be cause for termination and removal of NOA.

ADVERTISEMENT: The NOA number preceded by the words Miami-Dade County, Florida, and followed by the expiration date may be displayed in advertising literature. If any portion of the NOA is displayed, then it shall be done in its entirety.

INSPECTION: A copy of this entire NOA shall be provided to the user by the manufacturer or its distributors and shall be available for inspection at the job site at the request of the Building Official.

This NOA **revises NOA # 04-0421.02** and consists of this page 1 and evidence pages E-1 and E-2, as well as approval document mentioned above.

The submitted documentation was reviewed by **Manuel Perez, P.E.**

PRODUCT CONTROL ACCEPTED

R.C. Aluminum Industries, Inc.

NOTICE OF ACCEPTANCE: EVIDENCE SUBMITTED

A. DRAWINGS

1. Manufacturer's die drawings and sections.
2. Drawing No. **M04-19**, titled "Series SH100 Alum Single Hung Window (L.M.I.)," Sheets 1 through 4 of 4, prepared by Al-Farooq Corporation, dated 03/09/04 with revision **B** dated 09/13/06, signed and sealed by Humayoun Farooq, P.E.

B. TESTS

1. Test reports on 1) Air Infiltration Test, per FBC, TAS 202-94
   2) Uniform Static Air Pressure Test, Loading per FBC, TAS 20294
   3) Water Resistance Test, per FBC, TAS 202-94
   4) Large Missile Impact Test per FBC, TAS 201-94
   5) Cyclic Wind Pressure Loading per FBC, TAS 203-94
   6) Forced Entry Test, per FBC 2411.3.2.1 and TAS 202-94

   along with marked-up drawings and installation diagram of aluminum single hung windows mulled together, prepared by Fenestration Testing Laboratories, Inc. Test Report No. **FTL-4024** dated 01/14/04, signed and sealed by Edmundo J. Largaespada, P.E.
   (Submitted under previous NOA #04-0421.02)
2. Test reports on 1) Air Infiltration Test, per FBC, TAS 202-94
   2) Uniform Static Air Pressure Test, Loading per FBC, TAS 20294
   3) Water Resistance Test, per FBC, TAS 202-94
   4) Large Missile Impact Test per FBC, TAS 201-94
   5) Cyclic Wind Pressure Loading per FBC, TAS 203-94
   6) Forced Entry Test, per FBC 2411.3.2.1 and TAS 202-94

   along with marked-up drawings and installation diagram of an aluminum single hung window, prepared by Fenestration Testing Laboratories, Inc. Test Report No. **FTL-4005** dated 01/14/04, signed and sealed by Edmundo J. Largaespada, P.E.
   (Submitted under previous NOA #04-0421.02)

C. CALCULATIONS

1. Revised anchor verification calculations and structural analysis, complying with FBC-2004, prepared by Al-Farooq Corporation, dated 09/09/06 and revised on 03/15/07, signed and sealed by Humayoun Farooq, P.E.
   Complies with ASTM E1300-02
2. Anchor calculations, and structural analysis, prepared by Al-Farooq Corporation, dated 04/06/04, signed and sealed by Humayoun Farooq, P.E.
   (Submitted under previous NOA #04-0421.02)

Manuel Perez, P.E.
Product Control Examiner
NOA No. 06-1130.04
Expiration Date: June 24, 2009
Approval Date: April 05, 2007

NOTICE OF ACCEPTANCE: EVIDENCE SUBMITTED

D. QUALITY ASSURANCE

1. Miami Dade Building Code Compliance Office (BCCO).

E. MATERIAL CERTIFICATIONS

1. None.

F. STATEMENTS

1. Statement letter of compliance, dated September 9, 2006, signed and sealed by Humayoun Farooq, P.E.
2. Statement letter of no financial interest, dated September 9, 2006, signed and sealed by Humayoun Farooq, P.E.
3. Laboratory compliance letters for Test Report No. **FTL- 4005** and **FTL-4024**, issued by Fenestration Testing Laboratory, Inc., both dated February 9, 2004, signed and sealed by Edmundo Largaespada, P.E.

G. OTHER

1. Notice of Acceptance No. **04-0421.02**, issued to R.C. Aluminum Industries, Inc. for their Series RS 100Aluminum Single Hung Window, approved on 06/24/04 and expiring on 06/24/09.

Manuel Perez, P.E.
Product Control Examiner
NOA No. 06-1130.04
Expiration Date: June 24, 2009
Approval Date: April 05, 2007

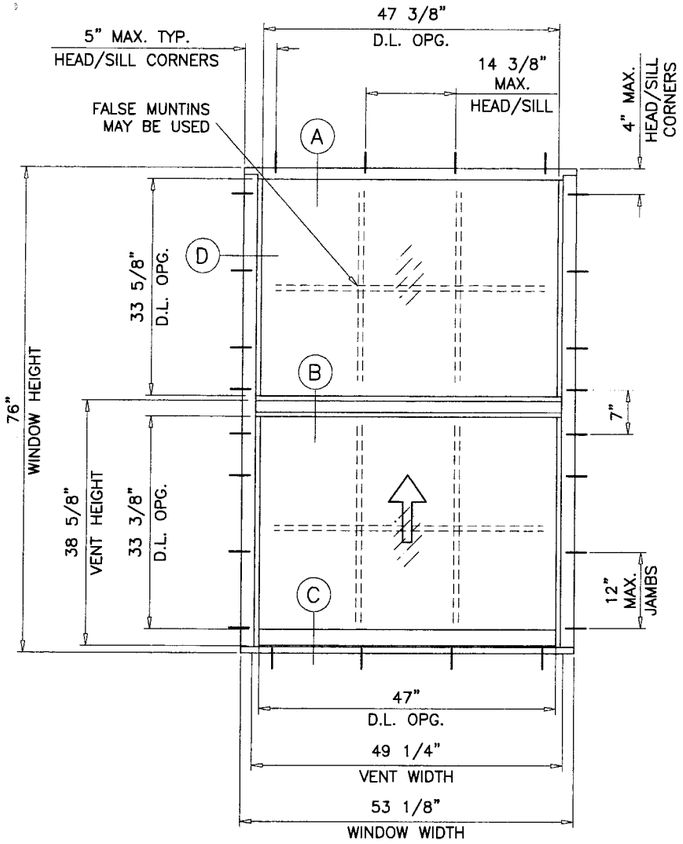

TYPICAL ELEVATION

TESTED UNIT

SH100 ALUM SINGLE HUNG WINDOW

DESIGN LOAD RATINGS FOR THESE WINDOWS TO BE AS PER CHART SHOWN ABOVE.

APPROVAL APPLIES TO SINGLE UNITS OR SIDE BY SIDE COMBINATIONS OF S.H./S.H. OR SINGLE HUNG WITH OTHER WINDOW TYPES IN MODULES OF TWO OR MORE WINDOWS USING MIAMI-DADE COUNTY APPROVED MULLIONS IN BETWEEN. LOWER DESIGN PRESSURE FROM WINDOWS OR MULLION APPROVAL WILL APPLY TO ENTIRE SYSTEM.

THIS PRODUCT HAS BEEN DESIGNED AND TESTED TO COMPLY WITH THE REQUIREMENTS OF THE FLORIDA BUILDING CODE 2004 EDITION INCLUDING HIGH VELOCITY HURRICANE ZONE (HVHZ).

WOOD BUCKS BY OTHERS, MUST BE ANCHORED PROPERLY TO TRANSFER LOADS TO THE STRUCTURE.

ANCHORS SHALL BE AS LISTED, SPACED AS SHOWN ON DETAILS, ANCHORS EMBEDMENT TO BASE MATERIAL SHALL BE BEYOND WALL DRESSING OR STUCCO.

ANCHORING OR LOADING CONDITIONS NOT SHOWN IN THESE DETAILS ARE NOT PART OF THIS APPROVAL.

A LOAD DURATION INCREASE IN ALLOWABLE STRESS IS USED IN DESIGN OF ANCHORS INTO WOOD ONLY.

MATERIALS INCLUDING BUT NOT LIMITED TO STEEL/METAL SCREWS, THAT COME INTO CONTACT WITH OTHER DISSIMILAR MATERIALS SHALL MEET THE REQUIREMENTS OF 2004 FLORIDA BLDG. CODE SECTION 2003.8.4.

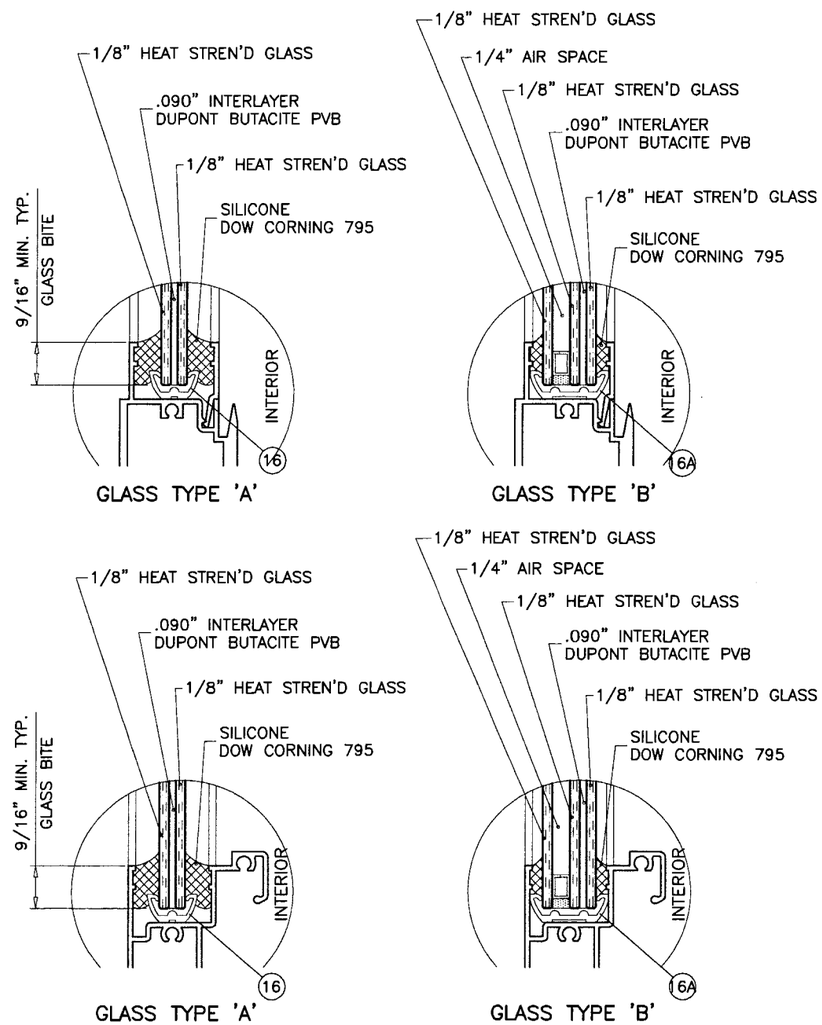

GLAZING OPTIONS

DESIGN LOAD CAPACITY – PSF			
WINDOW DIMS.		GLASS TYPE 'A' & 'B'	
WIDTH	HEIGHT	EXT.(+)	INT.(–)
19–1/8"	26" (4)	80.0	80.0
26–1/2"		80.0	80.0
37"		80.0	80.0
48"		80.0	80.0
53–1/8"		80.0	80.0
19–1/8"	38–3/8" (4)	80.0	80.0
26–1/2"		80.0	80.0
37"		80.0	80.0
48"		80.0	80.0
53–1/8"		80.0	80.0
19–1/8"	50–5/8" (6)	80.0	80.0
26–1/2"		80.0	80.0
37"		80.0	80.0
48"		80.0	80.0
53–1/8"		80.0	80.0
19–1/8"	58" (6)	80.0	80.0
26–1/2"		80.0	80.0
37"		80.0	80.0
48"		80.0	80.0
53–1/8"		80.0	80.0
19–1/8"	63" (8)	80.0	80.0
26–1/2"		80.0	80.0
37"		80.0	80.0
48"		80.0	80.0
53–1/8"		80.0	80.0
19–1/8"	74–1/4" (8)	80.0	80.0
26–1/2"		80.0	80.0
37"		80.0	80.0
48"		80.0	80.0
53–1/8"		80.0	80.0
19–1/8"	76" (8)	80.0	80.0
26–1/2"		80.0	80.0
37"		80.0	80.0
48"		80.0	80.0
53–1/8"		80.0	80.0

* NO. IN PARENTHESIS INDICATE NO. OF ANCHORS PER JAMB.

NOTE:
GLASS CAPACITIES ON THIS CHART ARE BASED ON ASTM E1300-02 (3 SEC. GUSTS) WITH REDUCTIONS FOR FLEXIBLE SUPPORTS TO COMPLY WITH SECTION 2403.2 OF FBC 2004 EDITION.

THESE WINDOWS ARE RATED FOR LARGE MISSILE IMPACT. SHUTTERS ARE NOT REQUIRED.

Engr: DR. HUMAYOUN FAROOQ
STRUCTURES
FLA. PE # 16557
C.A.N. 3538

MAR 1 5 2007

PRODUCT REVISED
as complying with the Florida
Building Code
Acceptance No. 06-1130.04
Expiration Date JUNE 24, 2009
By Manuel Perez
Miami Dade Product Control
Division

AL-FAROOQ CORPORATION
ENGINEERS & PRODUCT DEVELOPMENT
1235 S.W. 87 AVE
MIAMI, FLORIDA 33174
TEL. (305) 264-8100 FAX. (305) 262-6978
COMP-ANL\W04-19RC

SH100 ALUM SINGLE HUNG WINDOW (L.M.I.)

R.C. ALUMINUM INDUSTRIES INC.
2805 N.W. 75 TH AVE.
MIAMI, FL. 33122
TEL. (305) 592-1515 FAX. (305) 592-2184

revisions:

no	date	by	description
A	05.19.04		NO CHANGE THIS SHEET
B	09.13.06		UPDATED FOR 2004 FBC

date: 03-09-04
scale: 1/2"=1'-0"
dr. by: HAMID
chk. by:

drawing no. W04-19

sheet 1 of 4

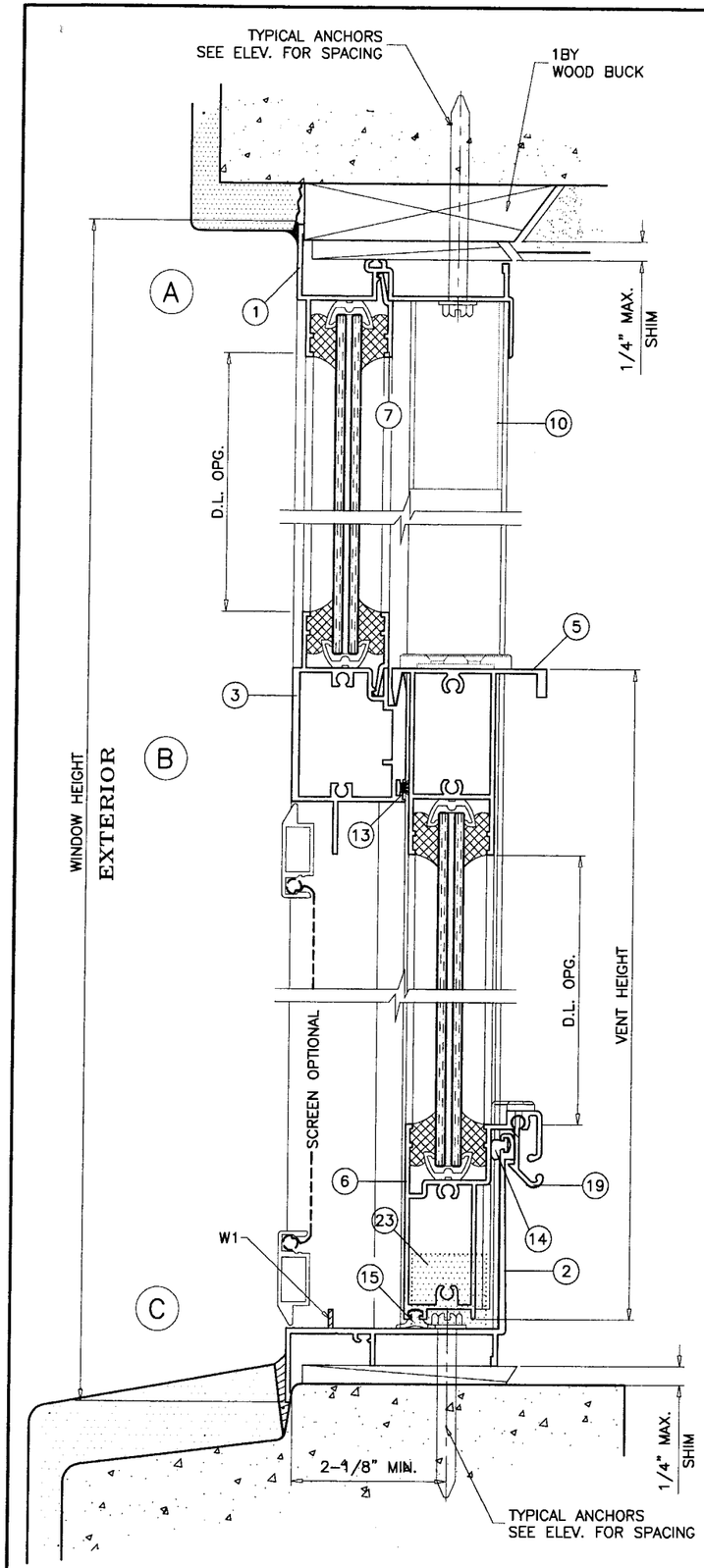

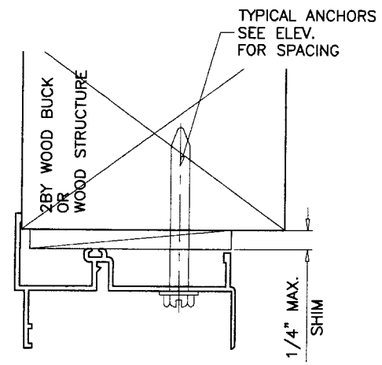

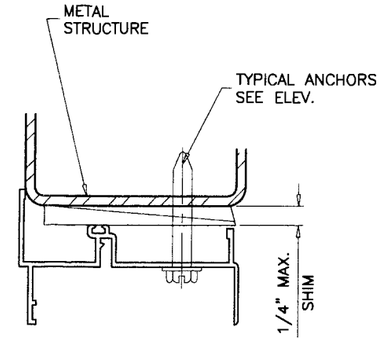

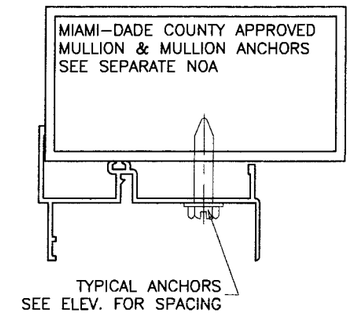

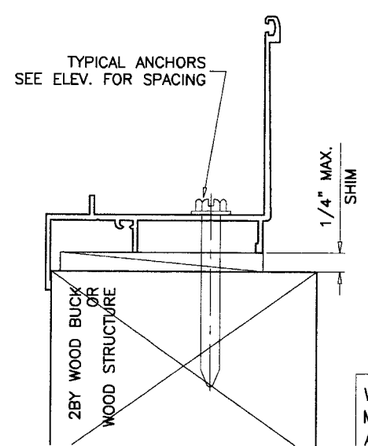

TYPICAL ANCHORS: SEE ELEV. FOR SPACING

1/4" HILTI KWIK-CON II

INTO 2BY WOOD BUCKS OR WOOD STRUCTURES
1-1/2" MIN. PENETRATION INTO WOOD

THRU 1BY BUCKS INTO CONC. OR MASONRY
1-1/4" MIN. EMBED INTO CONC. OR MASONRY

DIRECTLY INTO CONC. OR MASONRY
1-1/4" MIN. EMBED INTO CONC. OR MASONRY

1/4-20 KWIK-FLEX SELF DRILLING SCREWS BY 'HILTI'

INTO METAL STRUCTURES

STEEL : 12 GA. MIN. (Fy = 36 KSI MIN.)
ALUMINUM : 1/8" THK. MIN. (6063-T5 MIN.)
(STEEL IN CONTACT WITH ALUMINUM TO BE PLATED OR PAINTED)

#14 SMS OR SELF DRILLING SCREWS

INTO DADE COUNTY APPROVED MULLIONS (MIN. THK. = .090")
(NO SHIM SPACE)

ANCHOR EDGE DISTANCES

INTO CONCRETE AND MASONRY = 2-1/8" MIN.
INTO WOOD STRUCTURE = 1" MIN.
INTO METAL STRUCTURE = 1/2" MIN.

SEALANT:

ALL FRAME AND VENT CORNERS AND INSTALLATION SCREWS SEALED WITH SILICONE.

WEEPHOLES:

W1 = 1" WEEP NOTCH AT EACH END

WOOD BUCKS AND METAL STRUCTURE NOT BY RC ALUMINUM MUST SUSTAIN LOADS IMPOSED BY GLAZING SYSTEM AND TRANSFER THEM TO THE BUILDING STRUCTURE.

Engr: DR. HUMAYOUN FAROOQ
STRUCTURES
FLA. PE # 16557
C.A.N. 3538

MAR 1 5 2007

PRODUCT REVISED
as complying with the Florida Building Code
Acceptance No. 06-1130.04
Expiration Date JUNE 24, 2009
By Manuel Perez
Miami-Dade Product Control Division

AL-FAROOQ CORPORATION
ENGINEERS & PRODUCT DEVELOPMENT
1235 S.W. 87 AVE
MIAMI, FLORIDA 33174
TEL. (305) 264-8100 FAX. (305) 262-6978
COMP-ANL\W04-19RC

SH100 ALUM SINGLE HUNG WINDOW (L.M.I.)

R.C. ALUMINUM INDUSTRIES INC.
2805 N.W. 75 TH AVE.
MIAMI, FL. 33122
TEL. (305) 592-1515 FAX. (305) 592-2184

revisions:

no	date	by	description
A	05.19.04		REV. PER BCCO COMMENTS
B	09.13.06		UPDATED FOR 2004 FBC

date: 03-09-04
scale: 1/2" = 1"
dr. by: HAMID
chk. by:

drawing no.
W04-19

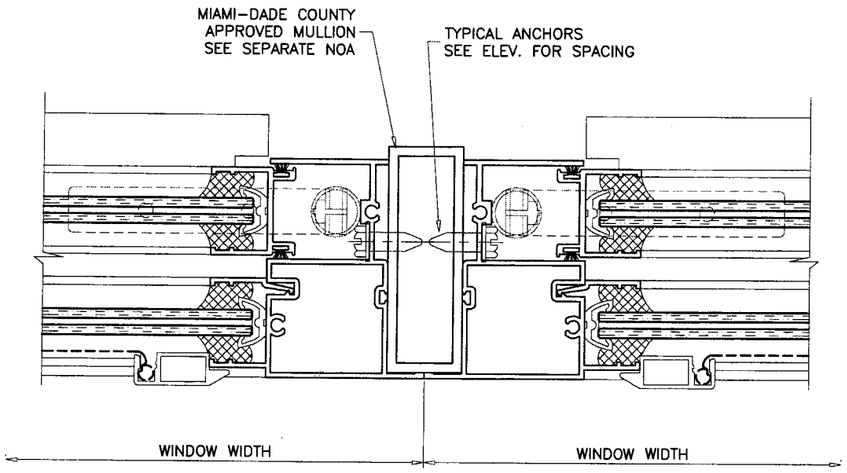

ITEM #	PART #	REQD.	DESCRIPTION	MATERIAL	MANF./SUPPLIER/REMARKS
1	RS100-008	1	FRAME HEAD	6063-T6	–
2	RS100-007	1	FRAME SILL	6063-T6	–
3	RS100-004	1	MEETING RAIL	6063-T6	–
4	RS100-001	2	FRAME JAMB	6063-T6	–
5	RS100-003	1	VENT HEAD	–	–
6	RS100-006	1	VENT BOTTOM RAIL	6063-T6	–
7	500Y-007	AS REQD.	GLAZING BEAD	6063-T6	–
9	RS100-009	2	VENT SIDE RAIL	6063-T6	–
10	CHANNEL	2	VENT STOP 1-1/4"x 1-1/4" x 2-1/2"	–	–
12	W3323INK	4	WEATHER STRIPPING PILE (VENT JAMBS)	–	–
13	W3323INK	1	WEATHER STRIPPING PILE (MEETING RAIL)	–	–
14	Q-LON	1	Q-375 X 190 WHITE	–	–
15	V-033	1	WEATHER STRIPPING GASKET	NEOPRENE	–
16	V-054	1	VINYL LAM. GLASS	PVC	–
16A	V-055	1	VINYL LAM. INSUL. GLASS	PVC	–
17	P-020	2	VENT TOP GUIDE	NYLON	ATTACHED W/ #8 X 3/8" FH SMS
18	P-022	2	VENT BOTTOM GUIDE	NYLON	–
19	P-023	2	HANDICAP FINGER LOCK	RIGID VINYL	6" FROM EACH END
22	#10 X 1"	AS REQD.	FRAME ASSY. SCREWS	ST. STEEL	P.H. PHL.
23		2	1" X 1" X 4" LG. FOAM PAD	–	–
24		2	ULTRA LIFT BALANCE # 23 x 30 LB	–	CADWELL
25		2	ULTRA LIFT NON TILT BRACKET	–	–
26	–	OPTIONAL	SCREEN	ALUMINUM	–

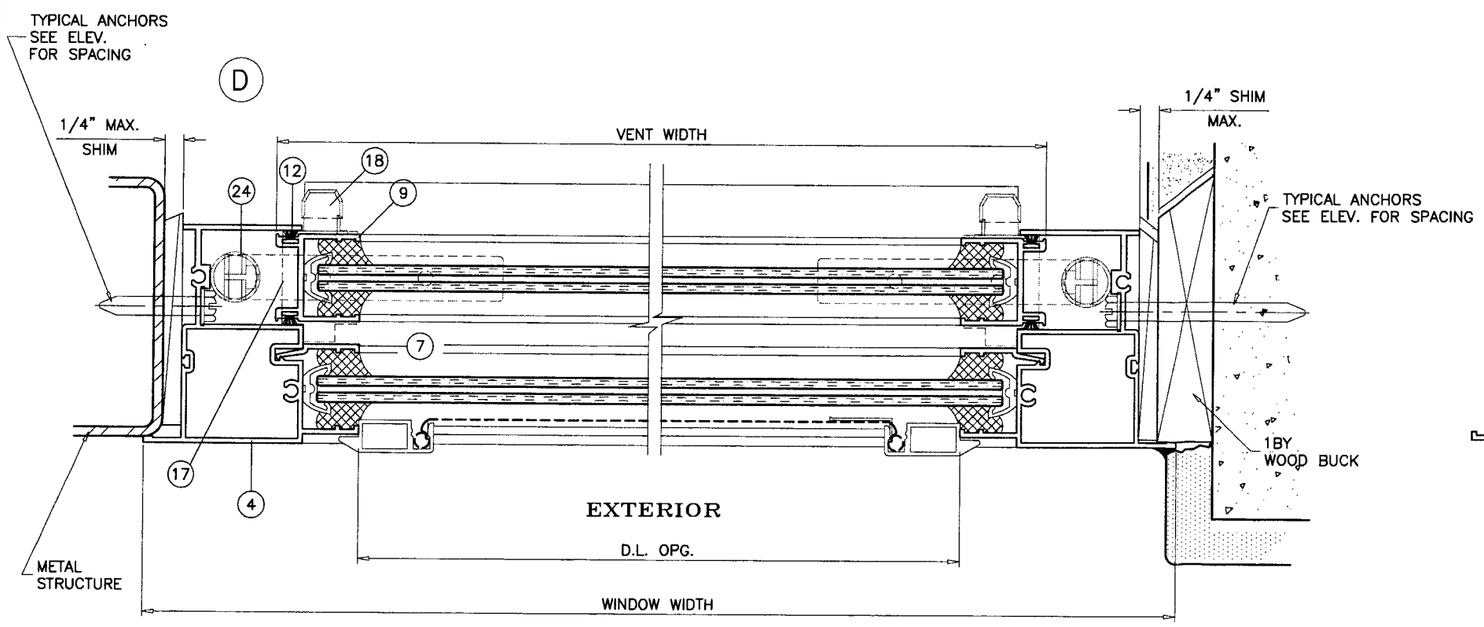

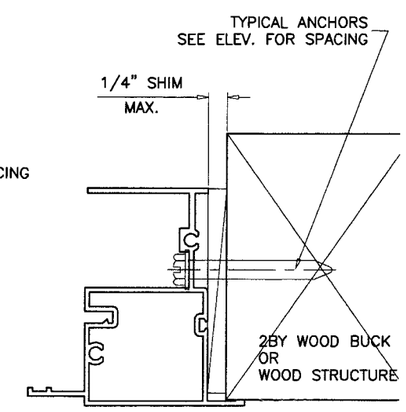

Engr: DR. HUMA'OUN FAROOQ
STRUCTURES
FLA. PE # 16557
C.A.N. 3538

MAR 1 5 2007

PRODUCT REVISED
as complying with the Florida
Building Code
Acceptance No. 06-1130.04
Expiration Date JUNE 24, 2009
By Manuel Suez
Miami Dade Product Control
Division

AL-FAROOQ CORPORATION
ENGINEERS & PROJECT DEVELOPMENT
1235 S.W. 87 AVE
MIAMI, FLORIDA 33174
TEL. (305) 264-8100 FAX. (305) 262-6978
COMP-ANL\W04-19RC

SH100 ALUM SINGLE HUNG WINDOW (L.M.I.)

R.C. ALUMINUM INDUSTRIES INC.
2805 N.W. 75 TH AVE.
MIAMI, FL. 33122
TEL. (305) 592-1515 FAX. (305) 592-2184

revisions:

no	date	by	description
A	05.19.04		NO CHANGE THIS SHEET
B	09.13.06		UPDATED FOR 2004 FBC

date: 03-09-04
scale: 1/2" = 1"
dr. by: HAMID
chk. by:

drawing no.
W04-19

sheet 3 of 4

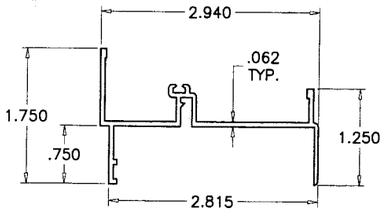

FRAME HEAD

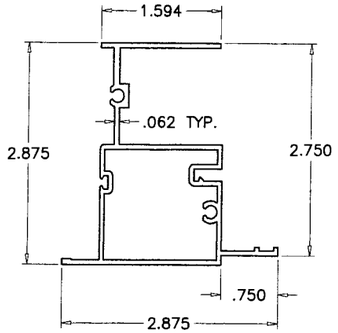

FRAME JAMB

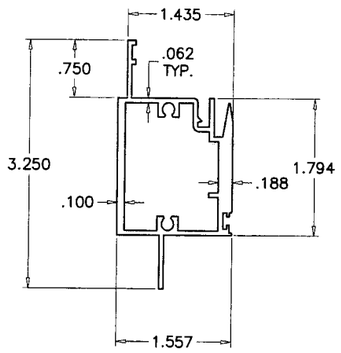

MEETING RAIL

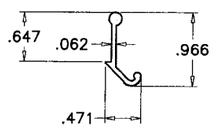

VENT LATCH

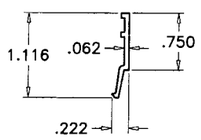

GLAZING BEAD

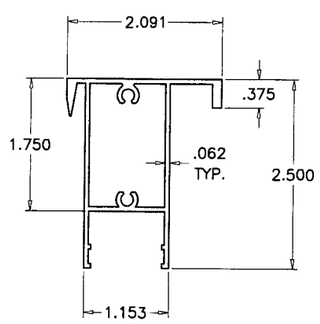

VENT TOP RAIL

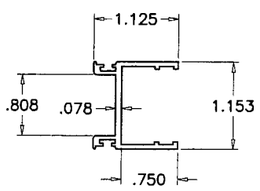

VENT SIDE RAIL

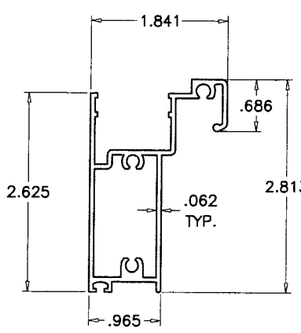

VENT BOTTOM RAIL

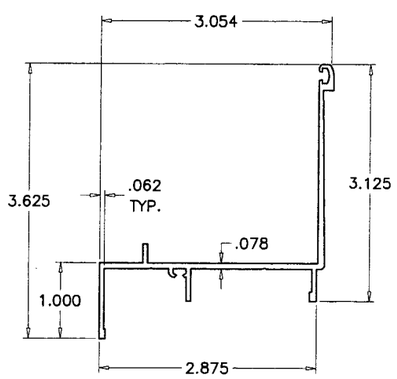

FRAME SILL

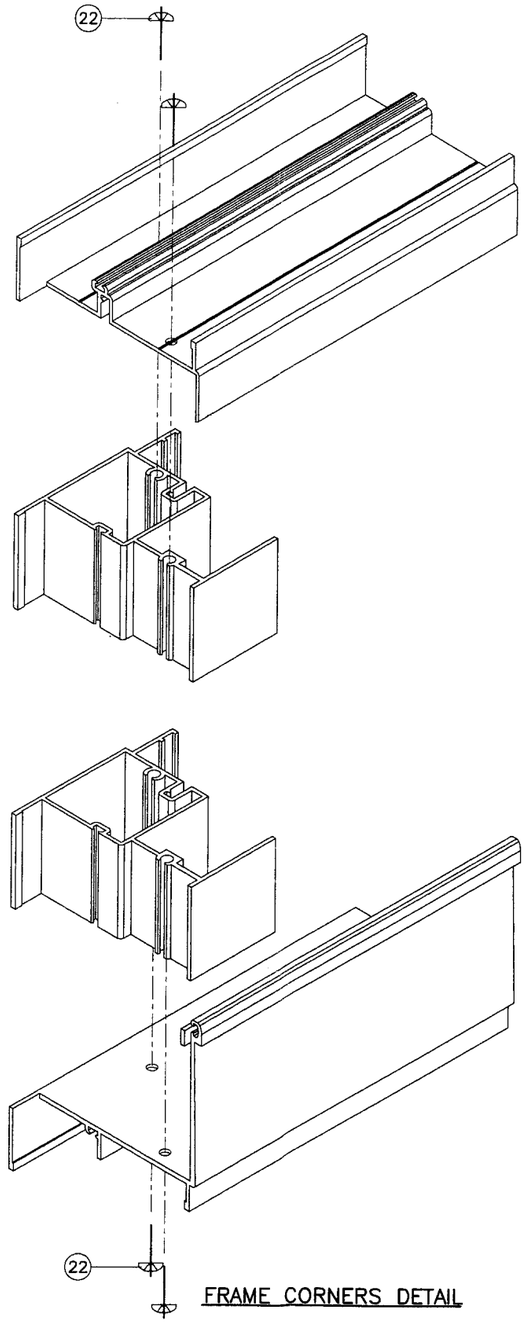

FRAME CORNERS DETAIL

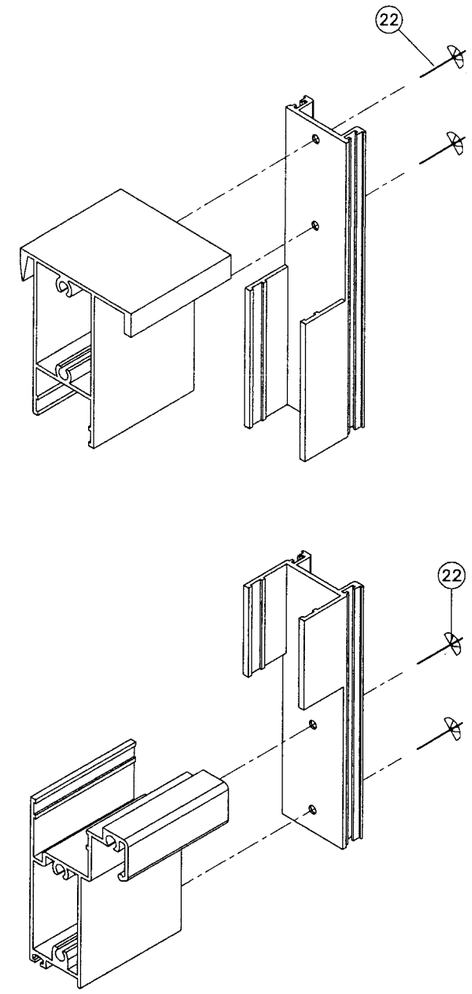

VENT CORNER DETAIL

Engr: DR. HUMAYOUN FAROOQ
STRUCTURES
FLA. PE # 16557
C.A.N. 3538

MAR 1 5 2007

PRODUCT REVISED
as complying with the Florida
Building Code
Acceptance No 06-1130.04
Expiration Date JUNE 24, 2009
By Manuel Perez
Miami-Dade Product Control
Division

AL-FAROOQ CORPORATION
ENGINEERS & PRODUCT DEVELOPMENT
1235 S.W. 87 AVE
MIAMI, FLORIDA 33174
TEL. (305) 264-8100 FAX. (305) 262-6978
COMP-ANL\W04-19RC

SH100 ALUM SINGLE HUNG WINDOW (L.M.I.)

R.C. ALUMINUM INDUSTRIES INC.
2805 N.W. 75 TH AVE.
MIAMI, FL. 33122
TEL. (305) 592-1515 FAX. (305) 592-2184

revisions:

no	date	by	description
A	05.19.04		NO CHANGE THIS SHEET
B	09.13.06		UPDATED FOR 2004 FBC

date: 03-09-04
scale: 1/2" = 1"
dr. by: HAMID
chk. by:

drawing no.
W04-19

sheet 4 of 4