MIAMI-DADE

BUILDING CODE COMPLIANCE OFFICE (BCCO)
PRODUCT CONTROL DIVISION

MIAMI-DADE COUNTY, FLORIDA
METRO-DADE FLAGLER BUILDING
140 WEST FLAGLER STREET, SUITE 1603
MIAMI, FLORIDA 33130-1563
(305) 375-2901 FAX (305) 375-2908

NOTICE OF ACCEPTANCE (NOA)

Ceramic Tiles by Pichs, Inc.
790 West 20 Street
Hialeah, FL. 33010

SCOPE:

This NOA is being issued under the applicable rules and regulations governing the use of construction materials. The documentation submitted has been reviewed by the BCCO and accepted by the Building Code and Product Review Committee to be used in Miami Dade County and other areas where allowed by the Authority Having Jurisdiction (AHJ).

This NOA shall not be valid after the expiration date stated below. The Miami-Dade County Product Control Division (In Miami Dade County) and/or the AHJ (in areas other than Miami Dade County) reserve the right to have this product or material tested for quality assurance purposes. If this product or material fails to perform in the accepted manner, the manufacturer will incur the expense of such testing and the AHJ may immediately revoke, modify, or suspend the use of such product or material within their jurisdiction. BORA reserves the right to revoke this acceptance, if it is determined by Miami-Dade County Product Control Division that this product or material fails to meet the requirements of the applicable building code.

This product is approved as described herein, and has been designed to comply with the Florida Building Code, including the High Velocity Hurricane Zone of the Florida Building Code.

DESCRIPTION: Cemisil Telha Portuguesa – Clay Roof Tile

LABELING: Each unit shall bear a permanent label with the manufacturer's name or logo, city, state and following statement: "Miami-Dade County Product Control Approved", unless otherwise noted herein.

RENEWAL of this NOA shall be considered after a renewal application has been filed and there has been no change in the applicable building code negatively affecting the performance of this product.

TERMINATION of this NOA will occur after the expiration date or if there has been a revision or change in the materials, use, and/or manufacture of the product or process. Misuse of this NOA as an endorsement of any product, for sales, advertising or any other purposes shall automatically terminate this NOA. Failure to comply with any section of this NOA shall be cause for termination and removal of NOA.

ADVERTISEMENT: The NOA number preceded by the words Miami-Dade County, Florida, and followed by the expiration date may be displayed in advertising literature. If any portion of the NOA is displayed, then it shall be done in its entirety.

INSPECTION: A copy of this entire NOA shall be provided to the user by the manufacturer or its distributors and shall be available for inspection at the job site at the request of the Building Official.

This NOA consists of pages 1 through 5.
The submitted documentation was reviewed by Alex Tigera.

PRODUCT CONTROL ACCEPTED

ROOFING ASSEMBLY APPROVAL

Category:	Roofing
Sub-Category:	07320 Roofing Tiles
Material:	Clay
Deck Type:	Wood

1. SCOPE

This approves a roofing system using **Cemisil Telha Portuguesa Clay Roof Tile** manufactured by ***Cemisil-Ceramica E Mineracao Silva LTDA*** in Brasil and is distributed by ***Ceramic Tiles by Pichs, Inc.*** as described in Section 2 of this Notice of Acceptance. For locations where the pressure requirements, as determined by applicable Building Code does not exceed the design pressure values obtained by calculations in compliance with RAS 127 using the values listed in section 4 herein. The attachment calculations shall be done as a moment based system.

2. PRODUCT DESCRIPTION

Manufactured by Applicant	Dimensions	Test Specifications	Product Description
Cemisil Telha Portuguesa Clay Roof Tile	L = 16-1/8" W = 9-3/4"	ASTM C1167	High profile clay roof tile. For direct deck adhesive set applications.
Trim Pieces	Length: varies Width: varies varying thickness	ASTM C1167	Accessory trim, clay roof pieces for use at hips, rakes, ridges and valley terminations manufactured for each tile profile.

2.1 SUBMITTED EVIDENCE:

Test Agency	Test Identifier	Test Name/Report	Date
PRI Construction Materials Technologies, Inc.	CTPI-001-02-01	ASTM C 1167	10/19/06
PRI Construction Materials Technologies, Inc.	CTPI-001-02-02	TAS 101	10/26/06

3. LIMITATIONS

3.1 Fire classification is not part of this acceptance.

3.2 For mortar or adhesive set tile applications, a static field uplift test shall be performed in accordance with TAS 106.

3.3 Applicant shall retain the services of a Miami-Dade County Certified Laboratory to perform quarterly test in accordance with TAS 112, appendix 'A'. Such testing shall be submitted to the Building Code Compliance Office for review.

3.4 Minimum underlayments shall be in compliance with the applicable Roofing Applications Standards listed section 4.1 herein.

3.5 30/90 hot mopped underlayment applications may be installed perpendicular to the roof slope unless stated otherwise by the underlayment material manufacturers published literature.

3.6 This acceptance is for wood deck applications. Minimum deck requirements shall be in compliance with the applicable Building Code.

4. INSTALLATION

4.1 Cemisil Telha Portuguesa Clay Roof Tile and its components shall be installed in strict compliance with Roofing Application Standard RAS 120.

4.2 Data For Attachment Calculations

Table 1: Average Weight (W) and Dimensions (l x w)			
Tile Profile	**Weight-W (lbf)**	**Length-l (ft)**	**Width-w (ft)**
Cemisil Telha Portuguesa Clay Roof Tile	5.3	1.34	0.813

Table 2: Aerodynamic Multipliers - λ (ft^3)		
Tile Profile	**λ (ft^3) Batten Application**	**λ (ft^3) Direct Deck Application**
Cemisil Telha Portuguesa Clay Roof Tile	N/A	0.154

Table 3: Restoring Moments due to Gravity - M_g (ft-lbf)						
Tile Profile	**2":12"**	**3":12"**	**4":12"**	**5":12"**	**6":12"**	**7":12" or Greater**
Cemisil Telha Portuguesa Clay Roof Tile	Direct Deck	Direct Deck	Direct Deck	Direct Deck	Direct Deck	Direct Deck
	3.67	3.62	3.55	3.44	3.30	3.12

Table 6: Attachment Resistance Expressed as a Moment - M_f (ft-lbf) for Single Patty Adhesive Set Systems		
Tile Profile	**Tile Application**	**Minimum Attachment Resistance**
Cemisil Telha Portuguesa Clay Roof Tile	Polyfoam PolyPro™	86.7[1]
1 Large paddy placement of 65 grams of PolyPro™AH-160.		

5. LABELING

5.1 All tiles shall bear the imprint or identifiable marking of the manufacturer's name or logo as detailed below, or following statement: "Miami-Dade County Product Control Approved".

CERAMICA SILVA

OR

CEMISIL

LABEL FOR CEMISIL TELHA PORTUGUESA CLAY ROOF TILE
(LOCATED ON THE UNDERSIDE OF TILE)

6. BUILDING PERMIT REQUIREMENTS

6.1 Application for building permit shall be accompanied by copies of the following:

6.1.1 This Notice of Acceptance.

6.1.2 Any other documents required by the Building Official or applicable building code in order to properly evaluate the installation of this system.

PROFILE DRAWING

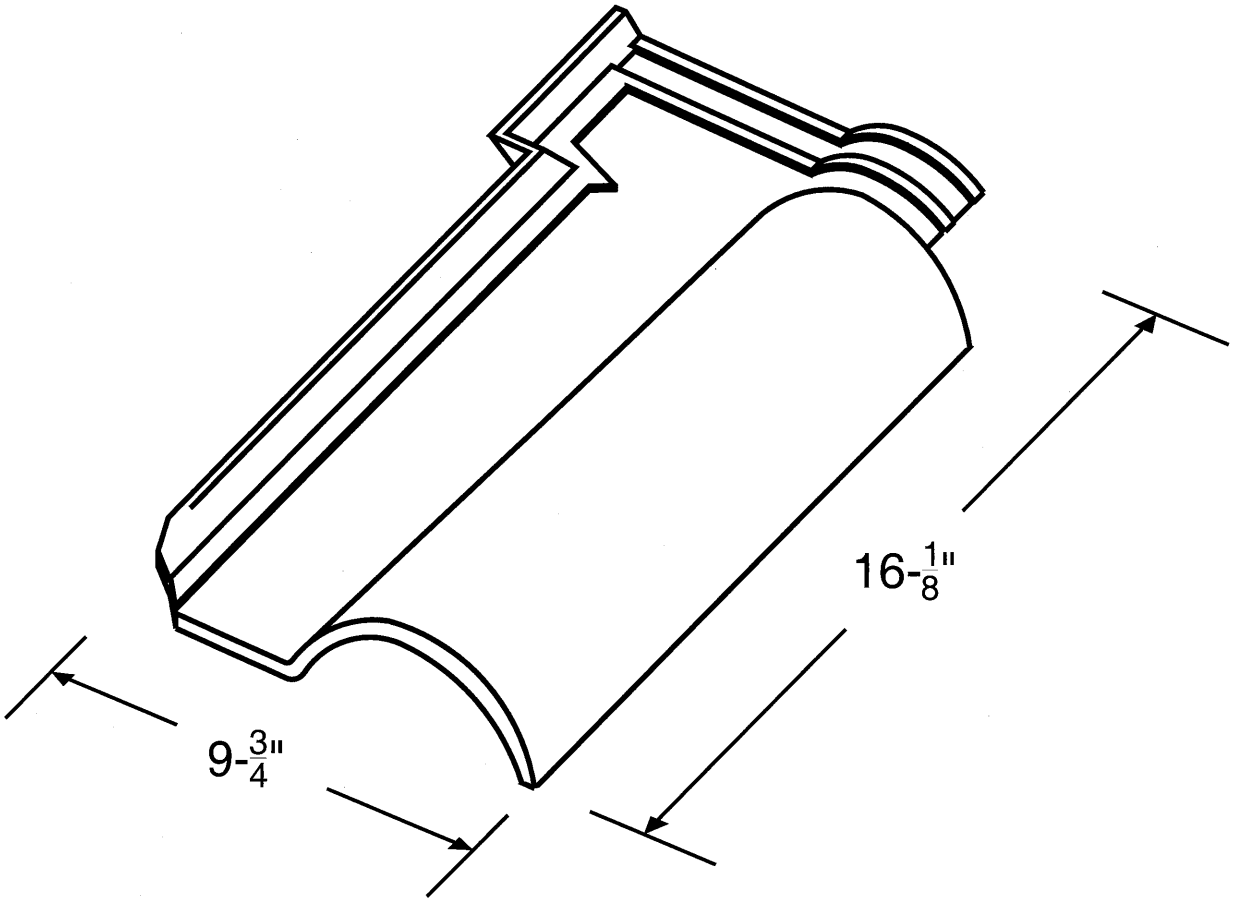

CEMISIL TELHA PORTUGUESA CLAY TILE
(N.T.S.)

END OF THIS ACCEPTANCE