MIAMI-DADE COUNTY, FLORIDA
METRO-DADE FLAGLER BUILDING
140 WEST FLAGLER STREET, SUITE 1603
MIAMI, FLORIDA 33130-1563
(305) 375-2901 FAX (305) 375-2908
www.buildingcodeonline.com

BUILDING CODE COMPLIANCE OFFICE (BCCO)
PRODUCT CONTROL DIVISION

NOTICE OF ACCEPTANCE (NOA)

Arrow United Industries
314 Riverside Drive P.O. Box 69
Wyalusing , PA 18853

SCOPE:

This NOA is being issued under the applicable rules and regulations governing the use of construction materials. The documentation submitted has been reviewed by Miami-Dade County Product Control Division and accepted by the Board of Rules and Appeals (BORA) to be used in Miami Dade County and other areas where allowed by the Authority Having Jurisdiction (AHJ).

This NOA shall not be valid after the expiration date stated below. The Miami-Dade County Product Control Division (In Miami Dade County) and/or the AHJ (in areas other than Miami Dade County) reserve the right to have this product or material tested for quality assurance purposes. If this product or material fails to perform in the accepted manner, the manufacturer will incur the expense of such testing and the AHJ may immediately revoke, modify, or suspend the use of such product or material within their jurisdiction. BORA reserves the right to revoke this acceptance, if it is determined by Miami-Dade County Product Control Division that this product or material fails to meet the requirements of the applicable building code. This product is approved as described herein, and has been designed to comply with the Florida Building Code, including the High Velocity Hurricane Zone.

DESCRIPTION: 6" Louver System Model EAV-66

APPROVAL DOCUMENT: Drawing No.**1504** titled "**EAV-66 Vertical Louver System**", sheets 1 through 4 of 4 dated 10/18/06 prepared by W.W. Schaefer Engineering and consulting P.A., signed and sealed on 11/07/06, by Warren W. Schaefer, P.E., bearing the Miami-Dade County Product Control Renewal stamp with the Notice of Acceptance number and expiration date by the Miami-Dade County Product Control Division.

MISSILE IMPACT RATING: Large and Small Missile Impact Resistant

LABELING: Each unit shall bear a permanent label with the manufacturer's name or logo, city, state and following statement: "Miami-Dade County Product Control Approved", unless otherwise noted herein.

RENEWAL of this NOA shall be considered after a renewal application has been filed and there has been no change in the applicable building code negatively affecting the performance of this product.

TERMINATION of this NOA will occur after the expiration date or if there has been a revision or change in the materials, use, and/or manufacture of the product or process. Misuse of this NOA as an endorsement of any product, for sales, advertising or any other purposes shall automatically terminate this NOA. Failure to comply with any section of this NOA shall be cause for termination and removal of NOA.

ADVERTISEMENT: The NOA number preceded by the words Miami-Dade county, Florida, and followed by the expiration date may be displayed in advertising literature. If any portion of the NOA is displayed, then it shall be done in its entirety.

INSPECTION: A copy of this entire NOA shall be provided to the user by the manufacturer or its distributors and shall be available for inspection at the job site at the request of the Building Official.
This NOA consists of this page 1 and evidence pages E-1, as well as approval document mentioned above.
The submitted documentation was reviewed by **Mohammed Iqbal Shaikh, P.E.**

PRODUCT CONTROL ACCEPTED 02/20/07

Arrow United Industries

NOTICE OF ACCEPTANCE: EVIDENCE SUBMITTED

A. DRAWINGS

1. Manufacturer's die drawings and sections.
2. Drawing No. **1504**, titled "**EAV -66 Vertical Louver System**", sheets 1 through 4 of 4 dated 10/18/06 prepared by W.W. Schaefer Engineering and consulting P.A., signed and sealed on 11/07/06, by W.W. Schaefer P.E.

B. TESTS

1. Test report on TAS 201-Large Missile Impact Test, TAS 203-Cyclic Wind Pressure Test and TAS 202-Uniform Static Air Pressure Test titled "**EAV-66 Aluminum Louver System for Arrow United Industries**", prepared by Hurricane Test Laboratories LLC Inc., report # **0198-0712-06** dated 11/07/06, signed and sealed by Vinu J. Abraham, P .E .

C. CALCULATIONS

1. Anchorage calculations, 13 pages for Arrow United Industries **Model EAV-66** Vertical Louver, prepared by W.W. Schaefer Engineering and consulting P.A., signed and sealed on 11/07/06, by Warren W. Schaefer, P.E.,

D. QUALITY ASSURANCE

1. Miami Dade Building Code Compliance Office (BCCO).

E. MATERIAL CERTIFICATIONS

1. None

F. STATEMENTS

1. Letter dated 11/06/2006 from W.W. Schaefer Engineering and consulting P.A.. stating that the product EAV-66 Vertical Louver system conforms to the 2004 Florida Building Code, signed and sealed by W.W. Schaefer P.E.
2. No financial interest letter from W.W. Schaefer Engineering and consulting P.A..dated 11/08/06 signed and sealed by W.W. Schaefer P.E.

Mohammed Iqbal Shaikh, P.E.
Sr. Building Code Compliance Specialist
NOA No 06-1211.03
Expiration Date: March 15, 2012
Approval Date: March 15, 2007

GENERAL NOTES:

1. IT SHALL BE THE RESPONSIBILITY OF THE PERMIT HOLDER TO VERIFY THE STRUCTURAL INTEGRITY OF THE EXISTING STRUCTURE TO SUPPORT THE LOADS SUPERIMPOSED BY THE LOUVERS.
2. THESE LOUVER SYSTEMS HAVE BEEN DESIGNED & TESTED IN ACCORDANCE WITH THE 2004 FLORIDA BUILDING CODE (FBC) AND PROTOCOLS TAS-201, 202 & 203 INCLUDING HIGH VELOCITY HURRICANE ZONES (HVHZ).
3. EACH LOUVER ASSEMBLY SHALL BE PERMANENTLY LABELED AS FOLLOWS: ARROW UNITED INDUSTRIES
   WYALUSING, PA
   MIAMI-DADE COUNTY PRODUCT CONTROL APPROVED
4. ALL CONCRETE SUBSTRATE SHALL BE MIN. 3000 PSI.
5. ALL WOOD SUBSTRATE SHALL BE MIN. G = 0.55 DENSITY.
6. ALL METAL STUD SUBSTRATE SHALL BE MIN. 16 GA. Fy = 33 ksi.
7. ALL STRUCTURAL STEEL SUBSTRATE SHALL BE MIN. 12 GA. Fy = 36 ksi.
8. INDIVIDUAL PANEL WIDTHS ARE UNLIMITED IN DIMENSION. PANEL HEIGHTS ARE LIMITED BY THE DIMENSIONS SHOWN IN THE ELEVATIONS.
9. INDIVIDUAL PANELS MAY BE STACKED HORIZONTALLY IN AN UNLIMITED QUANTITY. IT IS THE RESPONSIBILITY OF THE SUPPORTING STRUCTURES DESIGN ENGINEER/ARCHITECT TO INSURE THE SUPPORTING STRUCTURE WILL SUPPORT ALL DESGN LOADS TRANSFERED BY THE LOUVERS.
10. MATERIALS, INCLUDING BUT NOT LIMITED TO STEEL SCREWS, THAT COME INTO CONTACT WITH OTHER DISSIMILAR MATERIALS SHALL MEET THE REQUIREMENTS OF 2004 FLORIDA BUILDING CODE SECTION 2003.8.4.
11. THESE LOUVERS ARE NOT TESTED FOR WATER INFILTRATION RESISTANCE, THEREFORE THE LOUVERS ARE TO BE INSTALLED IN A LOCATION WHERE THE ROOM BEHIND THE LOUVER IS DESIGNED TO DRAIN WATER PENETRATING INTO THE ROOM, AND THE ROOM WILL HOUSE WATER RESISTANT/WATER PROOF EQUIPMENT, COMPONENTS OR SUPPLIES.

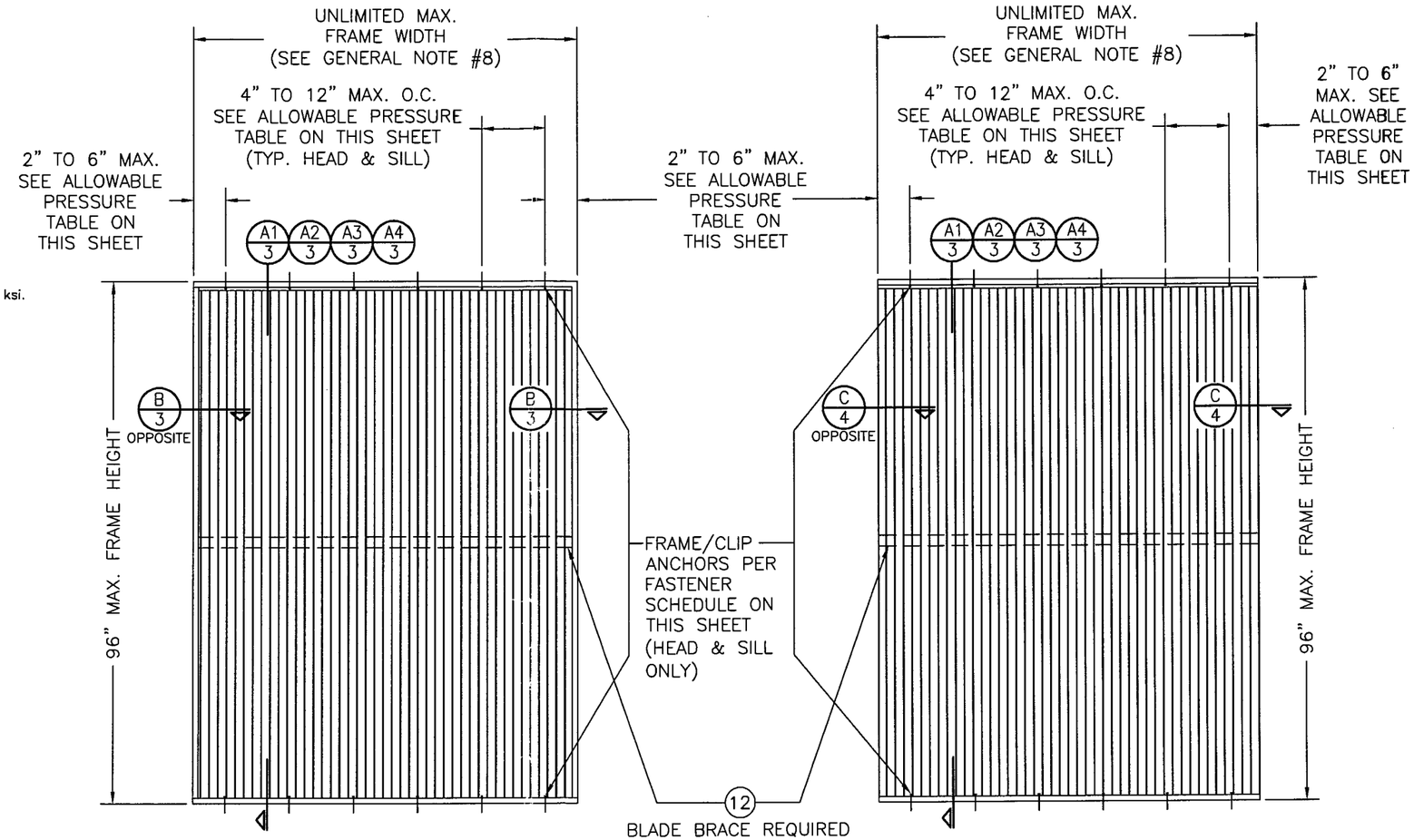

EXTERIOR ELEVATION
SINGLE LOUVER PANEL
(NON-ARCHITECTURAL)
SCALE: 1/2" = 1'-0"

EXTERIOR ELEVATION
SINGLE LOUVER PANEL
(ARCHITECTURAL)
SCALE: 1/2" = 1'-0"

NOTE: SIDE JAMBS MAY BE PLACED AS AN OPTION WITH ARCHITECTURAL LOUVERS BUT ARE NOT REQUIRED & THUS NOT SHOWN IN THIS ELEVATION

FASTENER SCHEDULE

ANCHOR TYPE	(4) SUBSTRATE	MINIMUM EMBEDMENT	MINIMUM EDGE DIST.
(3) NO. 10 S.S. SCREW	WOOD	1 1/4"	3/4"
(5) NO. 10-16 SELF TAPPING/DRILLING SCREW	METAL STUD	FULL	3/4"
(1) 1/4" CONCRETE SCREW	CONCRETE	1 1/4"	2"
(2) 1/4" BOLT	STEEL OR METAL STUD	FULL	3/4"
(5) 1/4-20 OR 1/4-14 SELF TAPPING/DRILLING SCREW	STEEL	FULL	3/4"

(1) CONCRETE SCREWS SHALL BE ITW RAMSET RED HEAD, ELCO TAPCONS, POWERS RAWL TAPPER, OR HILTI KWIK-CON II. (HARDENED STEEL OR S.S. PER AISI 1021 & 410)
(2) BOLT SHALL BE MIN. A307 GALVANIZED OR 304 S.S. (Fv = 10,000 PSI MIN.)
(3) SMS WOOD SCREWS SHALL HAVE MIN. YIELD STRENGTH OF Fyb = 80,000 PSI
(4) SEE GENERAL NOTES FOR SUBSTRATE REQUIREMENTS.
(5) SELF TAPPING SCREWS SHALL BE CORROSION RESISTANT MIN. SAE GRADE 2 STEEL OR MIN. ALLOY GROUP 1, 2 & 3 CONDITION "A" STAINLESS STEEL.

ALLOWABLE DESIGN PRESSURE

MAX. ANCHOR SPACING	MAX. ANCHOR END DISTANCE	ALLOWABLE PRESSURE
4"	2"	+/-150 PSF
8"	4"	+/-75 PSF
12"	6"	+/-50 PSF

CORNER & BLADE END CONSTRUCTION

BLADE TO HEAD & SILL:
BLADE END IS SQUARE CUT, BUTTED AND JOINED TO HEAD AND SILL WITH TWO NO. 8 X 1" S.S. SMS SCREWS PER BLADE END.
HEAD & SILL TO JAMB:
SIDE JAMB IS SQUARE CUT, BUTTED AND JOINED TO HEAD AND SILL WITH TWO 1/4" X 1" SELF TAPPING SCREWS.

Approved as complying with the Florida Building Code
Date 03/15/2007
NOA# 06-1211.03
Approval is for product only
Division
By M Shall

DRAWN BY: W.R.M.	CHECKED BY: W.W.S.
PLOT: 1=24	DATE: 10/18/06

NO.	REVISION DESCRIPTION	BY	DATE

DRAWING TITLE
EAV-66 VERTICAL LOUVER SYSTEM

MANUFACTURER
ARROW UNITED INDUSTRIES
314 RIVERSIDE DRIVE
WYALUSING, PA 18853
570-746-1888

CONSULTANTS
W. W. SCHAEFER ENGINEERING & CONSULTING, P.A.
8895 N. MILITARY TRAIL; SUITE C-204
PALM BEACH GARDENS, FL 33410
PHONE: 561-775-4902 FAX: 561-775-4903

CERTIFICATION
NOV 07 2006
WARREN W. SCHAEFER, P.E.
P.E. NO. 44135

DRAWING NO. 1504
REV.
SHEET NO. 1 OF 4

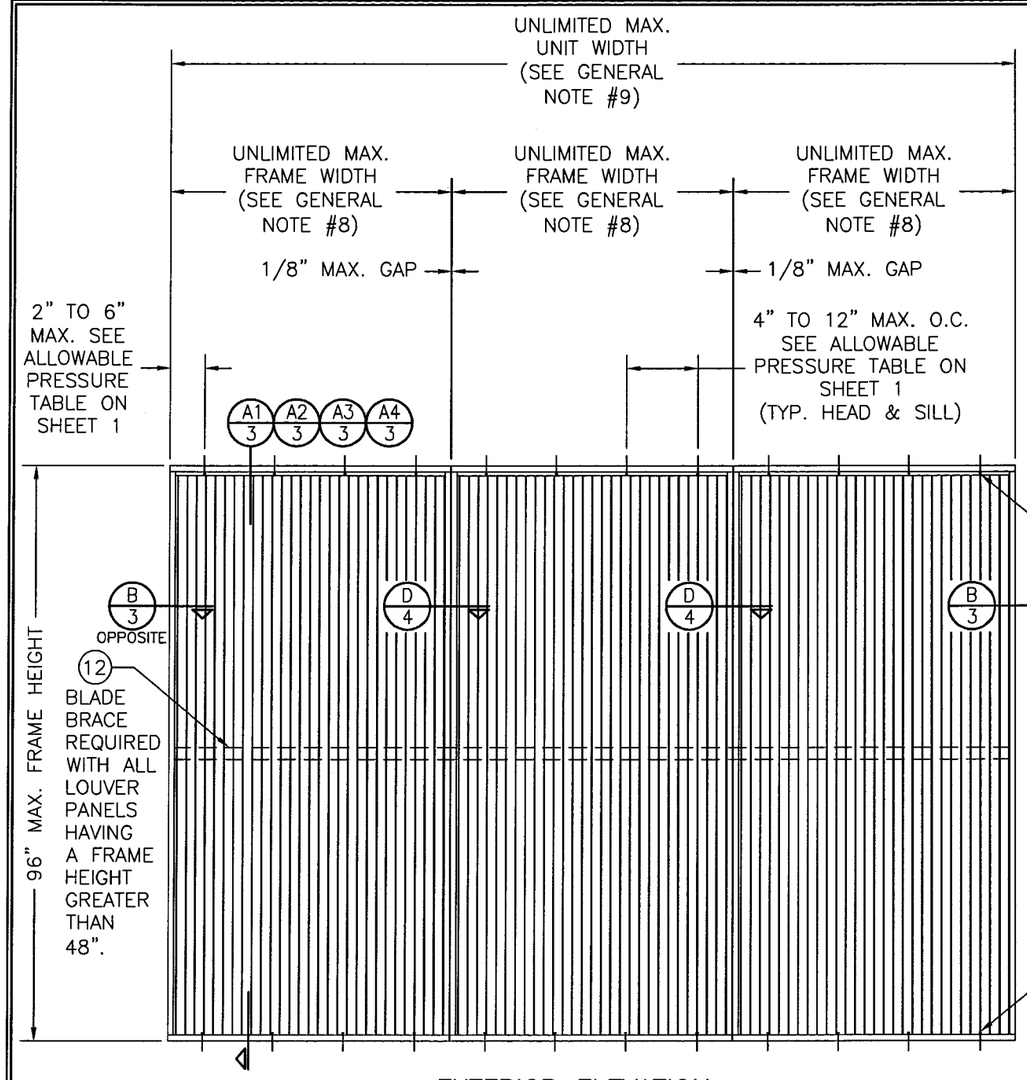

EXTERIOR ELEVATION
MULTIPLE LOUVER PANELS
(NON-ARCHITECTURAL)
SCALE: 1/2" = 1'-0"

FRAME/CLIP ANCHORS PER FASTENER SCHEDULE ON SHEET 1 (HEAD & SILL ONLY)

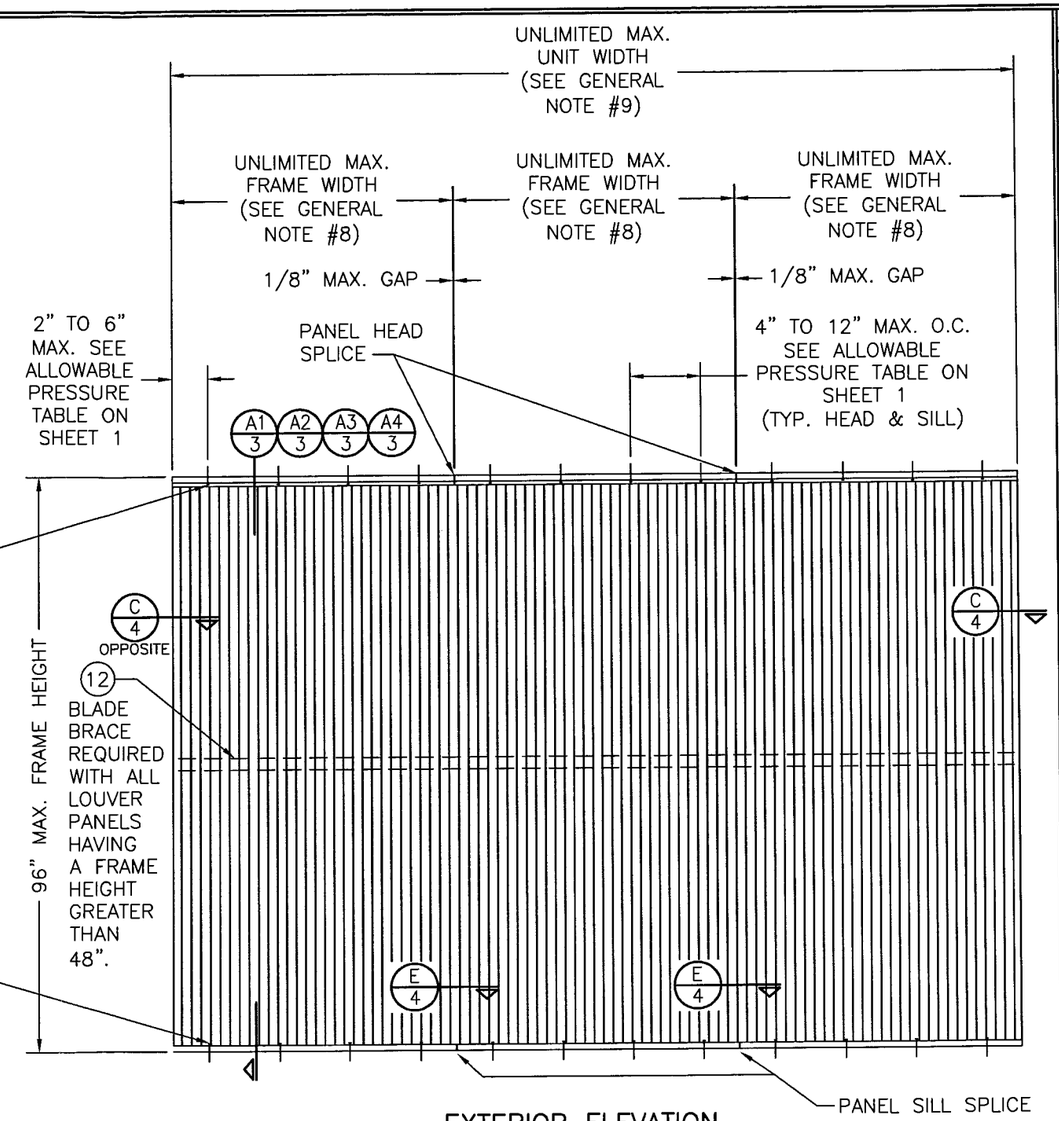

EXTERIOR ELEVATION
MULTIPLE LOUVER PANELS
(ARCHITECTURAL)
SCALE: 1/2" = 1'-0"

NOTE: SIDE JAMBS MAY BE PLACED AT THE PERIMITER AS AN OPTION WITH ARCHITECTURAL LOUVERS BUT ARE NOT REQUIRED & THUS NOT SHOWN IN THIS ELEVATION

Approved as modified with the following comments
Date 03/15/2007
Project 06-1211.03
Signature

DRAWN BY: W.R.M.	CHECKED BY: W.W.S.
PLOT: 1=24	DATE: 10/18/06

NO.	REVISION DESCRIPTION	BY	DATE

DRAWING TITLE
EAV-66 VERTICAL LOUVER SYSTEM

MANUFACTURER
ARROW UNITED INDUSTRIES
314 RIVERSIDE DRIVE
WYALUSING, PA 18853
570-746-1888

CONSULTANTS
W. W. SCHAEFER ENGINEERING & CONSULTING, P.A.
8895 N. MILITARY TRAIL; SUITE C-204
PALM BEACH GARDENS, FL 33410
PHONE: 561-775-4902 FAX: 561-775-4903

CERTIFICATION
NOV 07 2006
WARREN W. SCHAEFER, P.E.
P.E. NO. 44135

DRAWING NO. 1504
REV.
SHEET NO. 2 OF 4

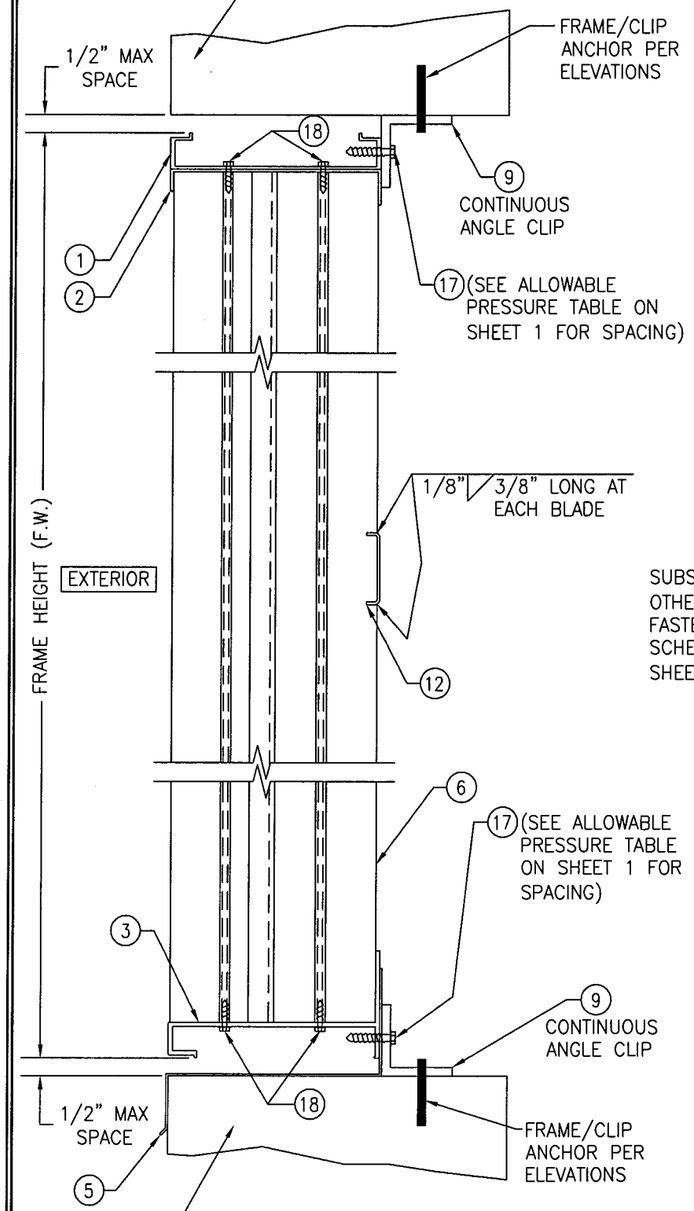

SECTION A1/3
SCALE: 1/2 FULL
(STANDARD MOUNT CONDITION WITH CLIP TURNED OUT)

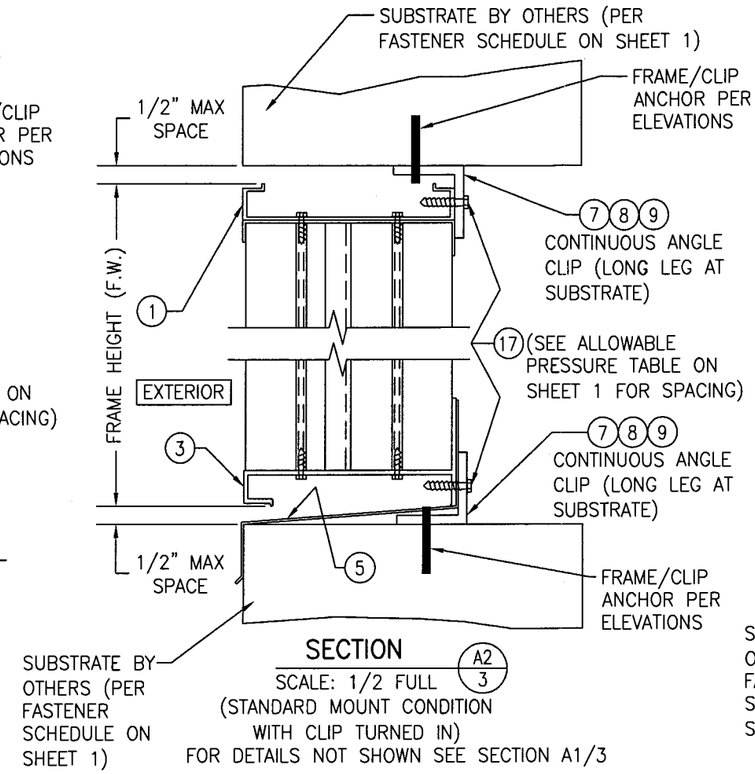

SECTION A2/3
SCALE: 1/2 FULL
(STANDARD MOUNT CONDITION WITH CLIP TURNED IN)
FOR DETAILS NOT SHOWN SEE SECTION A1/3

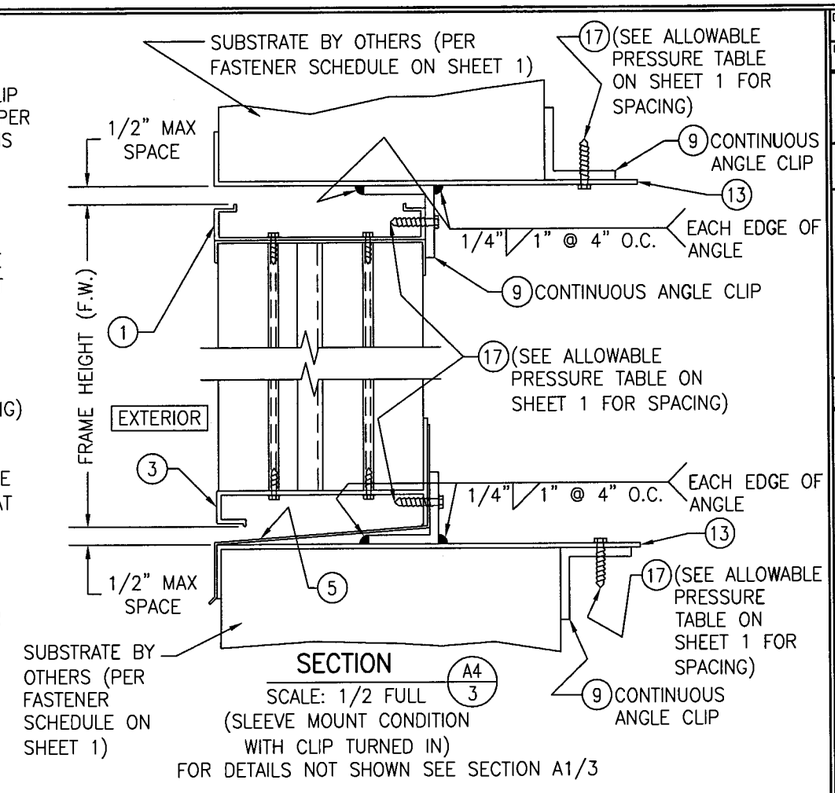

SECTION A4/3
SCALE: 1/2 FULL
(SLEEVE MOUNT CONDITION WITH CLIP TURNED IN)
FOR DETAILS NOT SHOWN SEE SECTION A1/3

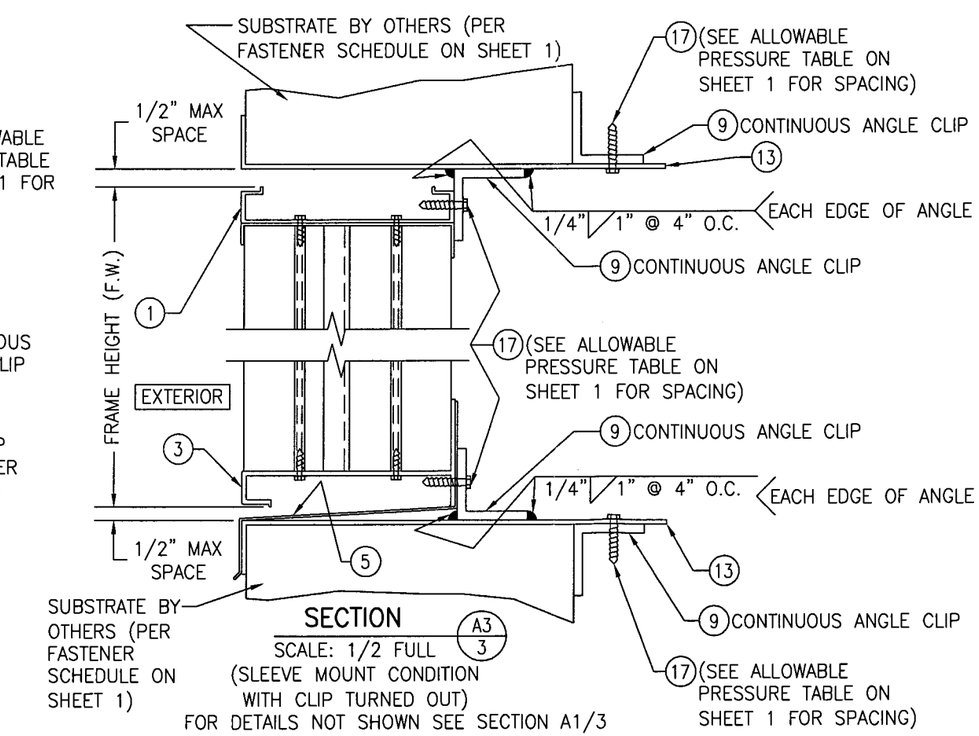

SECTION A3/3
SCALE: 1/2 FULL
(SLEEVE MOUNT CONDITION WITH CLIP TURNED OUT)
FOR DETAILS NOT SHOWN SEE SECTION A1/3

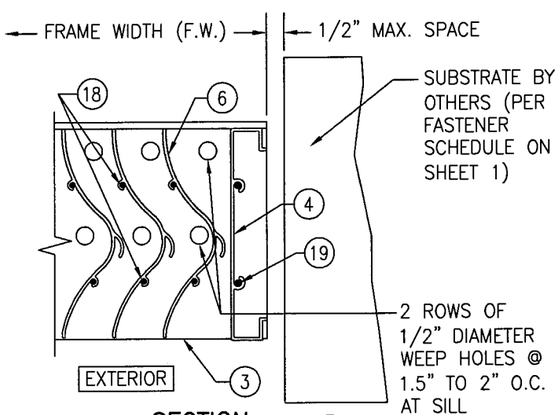

SECTION B/3
SCALE: 1/2 FULL

Approved as complying with the Florida Building Code
03/15/2007
06-1211.03

DRAWN BY: W.R.M.	CHECKED BY: W.W.S.
PLOT: 1=4	DATE: 10/18/06

NO.	REVISION DESCRIPTION	BY	DATE

DRAWING TITLE
EAV-66 VERTICAL LOUVER SYSTEM

MANUFACTURER
ARROW UNITED INDUSTRIES
314 RIVERSIDE DRIVE
WYALUSING, PA 18853
570-746-1888

CONSULTANTS
W. W. SCHAEFER ENGINEERING & CONSULTING, P.A.
8895 N. MILITARY TRAIL; SUITE C-204
PALM BEACH GARDENS, FL 33410
PHONE: 561-775-4902 FAX: 561-775-4903

CERTIFICATION
NOV 07 2006
WARREN W. SCHAEFER, P.E.
P.E. NO. 44135

DRAWING NO. 1504
REV.
SHEET NO. 3 OF 4

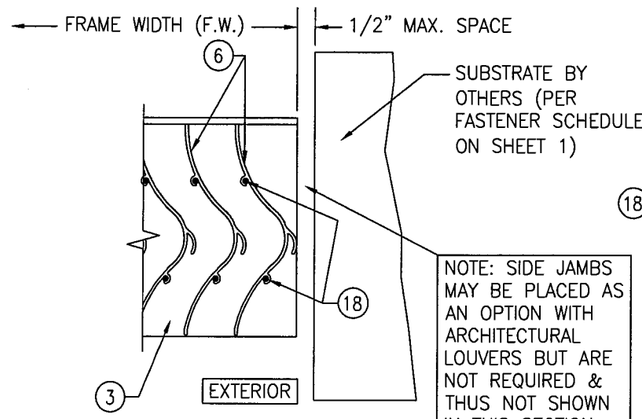

SECTION C/4
SCALE: 1/2 FULL

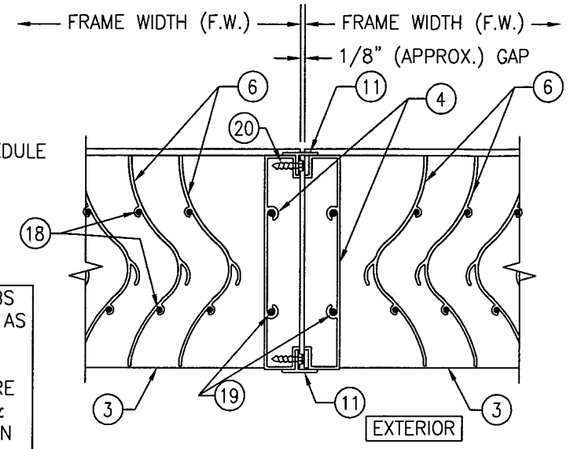

SECTION D/4
SCALE: 1/2 FULL

ITEM #	ITEM DESCRIPTION	MANUFACTURER/NOTES
	PARTS	
1	HEAD FRAME "A"	6063-T6 ALUMINUM
2	HEAD FRAME "B"	6063-T5 ALUMINUM
3	SILL FRAME	6063-T6 ALUMINUM
4	JAMB	6063-T6 ALUMINUM
5	SILL PAN	6063-T6 ALUMINUM
6	VERTICAL BLADE	6063-T6 ALUMINUM
7	CONTINUOUS MOUNTING CLIP	6063-T5 ALUMINUM
8	CONTINUOUS MOUNTING CLIP	6063-T5 ALUMINUM
9	CONTINUOUS MOUNTING CLIP	6063-T5 ALUMINUM
10	OPTIONAL FRAME FLANGE	6063-T52/T6 ALUMINUM
11	MULLION COVER	6063-T52/T6 ALUMINUM
12	BLADE RETAINER CHANNEL	6063-T5 ALUMINUM
13	MOUNTING SLEEVE	6063-T5 ALUMINUM
	MISC. FASTENERS	
17	NO. 14 X 1 1/4" 410 SS TEK SCREW	FOR SPACING REQUIREMENTS SEE ALLOWABLE PRESSURE TABLE ON SHEET 1
18	NO. 8 X 1" 18-8 SS SMS SCREW	2 PER BLADE END
19	1/4" X 1" 410 S.S. SELF TAPPING SCREW	2 PER FRAME CORNER
20	NO. 8 X 3/4" 18-8 SS SMS SCREW	2" FROM ENDS & 15" O.C.

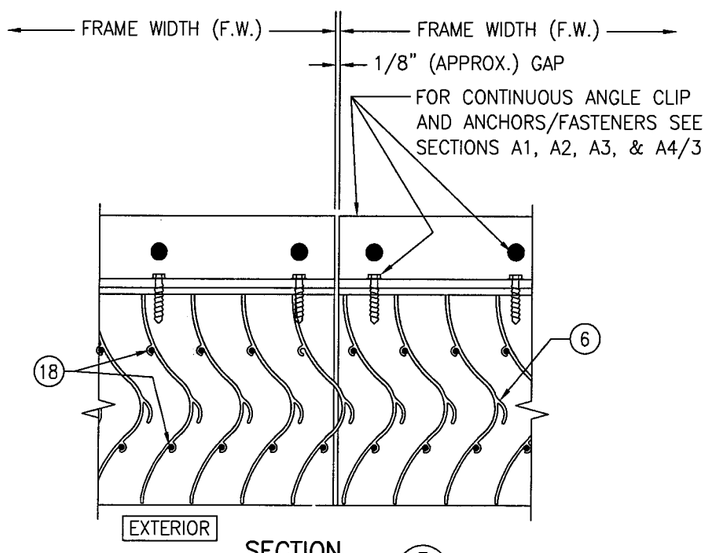

SECTION E/4
SCALE: 1/2 FULL

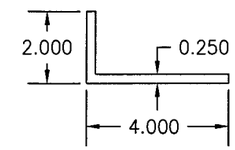

7 CONTINUOUS MOUNTING CLIP

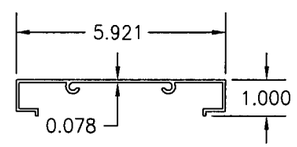

4 JAMB

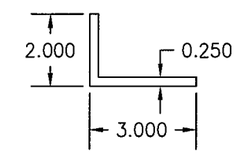

8 CONTINUOUS MOUNTING CLIP

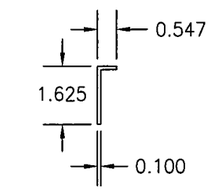

10 OPTIONAL FRAME FLANGE

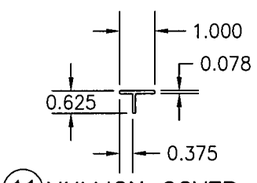

11 MULLION COVER

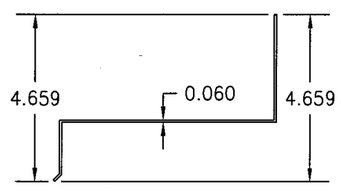

5 SILL PAN

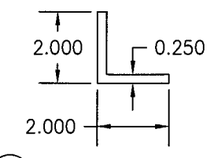

9 CONTINUOUS MOUNTING CLIP

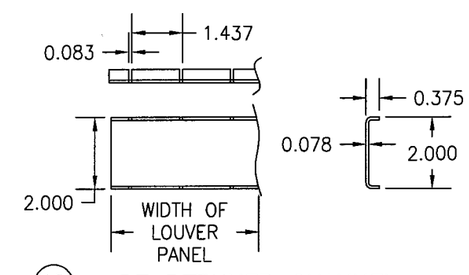

12 BLADE RETAINER CHANNEL

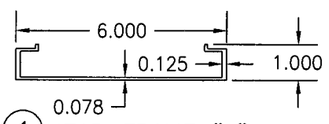

1 HEAD FRAME "A"

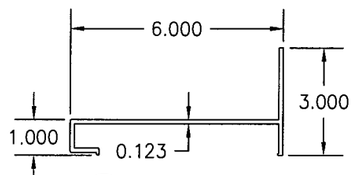

3 SILL FRAME

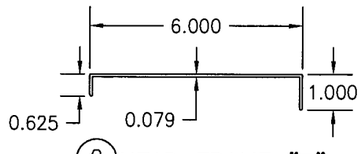

2 HEAD FRAME "B"

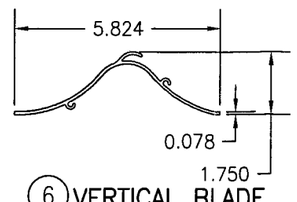

6 VERTICAL BLADE

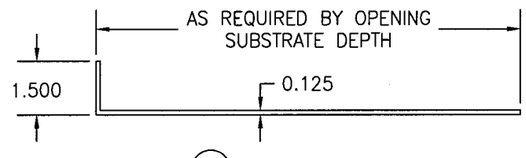

13 MOUNTING SLEEVE

Approved as complying with the Florida Building Code
Date 03/15/2007
Model 06-1211.03
Product Control

DRAWN BY: W.R.M.	CHECKED BY: W.W.S.
PLOT: 1=4	DATE: 10/18/06

NO.	REVISION DESCRIPTION	BY	DATE

DRAWING TITLE
EAV-66 VERTICAL LOUVER SYSTEM

MANUFACTURER
ARROW UNITED INDUSTRIES
314 RIVERSIDE DRIVE
WYALUSING, PA 18853
570-746-1888

CONSULTANTS
W. W. SCHAEFER ENGINEERING & CONSULTING, P.A.
8895 N. MILITARY TRAIL; SUITE C-204
PALM BEACH GARDENS, FL 33410
PHONE: 561-775-4902 FAX: 561-775-4903

CERTIFICATION
NOV 07 2006
WARREN W. SCHAEFER, P.E.
P.E. NO. 44135

DRAWING NO. 1504
REV.
SHEET NO. 4 OF 4