MIAMI-DADE COUNTY
BUILDING CODE COMPLIANCE OFFICE (BCCO)
PRODUCT CONTROL DIVISION

MIAMI-DADE COUNTY, FLORIDA
METRO-DADE FLAGLER BUILDING

140 WEST FLAGLER STREET, SUITE 1603
MIAMI, FLORIDA 33130-1563
(305) 375-2901 FAX (305) 375-2908
www.miamidade.gov

NOTICE OF ACCEPTANCE (NOA)

Stormwise Production, Inc.
13015 N.W. 45th Avenue
Opa-Locka, Florida 33054

SCOPE:
This NOA is being issued under the applicable rules and regulations governing the use of construction materials. The documentation submitted has been reviewed by Miami-Dade County Product Control Division and accepted by the Board of Rules and Appeals (BORA) to be used in Miami Dade County and other areas where allowed by the Authority Having Jurisdiction (AHJ).

This NOA shall not be valid after the expiration date stated below. The Miami-Dade County Product Control Division (In Miami Dade County) and/or the AHJ (in areas other than Miami Dade County) reserve the right to have this product or material tested for quality assurance purposes. If this product or material fails to perform in the accepted manner, the manufacturer will incur the expense of such testing and the AHJ may immediately revoke, modify, or suspend the use of such product or material within their jurisdiction. BORA reserves the right to revoke this acceptance, if it is determined by Miami-Dade County Product Control Division that this product or material fails to meet the requirements of the applicable building code.

This product is approved as described herein, and has been designed to comply with the High Velocity Hurricane Zone of the Florida Building Code.

DESCRIPTION: " HT-800 High Rise " Aluminum Accordion Shutter

APPROVAL DOCUMENT: Drawing No. 06-539, titled " HT-800 High Rise Accordion Shutter ", sheets 1 through 6 of 6, prepared by Thornton Tomasetti, dated July 11, 2006, last revision #2 dated October 3, 2006, signed and sealed by V. J. Knezevich, P.E., bearing the Miami-Dade County Product Control Approval stamp with the Notice of Acceptance number and approval date by the Miami-Dade County Product Control Division.

MISSILE IMPACT RATING: Large and Small Missile Impact

LABELING: Each unit shall bear a permanent label with the manufacturer's name or logo, city, state and the following statement: "Miami-Dade County Product Control Approved", unless otherwise noted herein.

RENEWAL of this NOA shall be considered after a renewal application has been filed and there has been no change in the applicable building code negatively affecting the performance of this product.

TERMINATION of this NOA will occur after the expiration date or if there has been a revision or change in the materials, use, and/or manufacture of the product or process. Misuse of this NOA as an endorsement of any product, for sales, advertising or any other purposes shall automatically terminate this NOA. Failure to comply with any section of this NOA shall be cause for termination and removal of NOA.

ADVERTISEMENT: The NOA number preceded by the words Miami-Dade County, Florida, and followed by the expiration date may be displayed in advertising literature. If any portion of the NOA is displayed, then it shall be done in its entirety.

INSPECTION: A copy of this entire NOA shall be provided to the user by the manufacturer or its distributors and shall be available for inspection at the job site at the request of the Building Official.

This NOA consists of this page 1, evidence submitted page E-1 as well as approval document mentioned above. The submitted documentation was reviewed by **Helmy A. Makar, P.E., M.S.**

Helmy A. Makar
04/16/2007

PRODUCT CONTROL ACCEPTED

NOA No 06-1213.02
Expiration Date: 04/16/2012
Approval Date: 04/16/2007

Stormwise Production, Inc.

NOTICE OF ACCEPTANCE: EVIDENCE SUBMITTED

A. DRAWINGS

1. *Drawing No. 06-539, titled " HT-800 High Rise Accordion Shutter ", sheets 1 through 6 of 6, prepared by Thornton Tomasetti, dated July 11, 2006, last revision #2 dated October 3, 2006, signed and sealed by V. J. Knezevich, P.E., on November 09, 2006.*

B. TESTS

1. *See Association's generic approval under 06-0399.*

C. CALCULATIONS

1. *See Association's generic approval under 06-0399.*

D. QUALITY ASSURANCE

1. *By Miami-Dade County Building Code Compliance Office.*

E. MATERIAL CERTIFICATIONS

1. *See Association's generic approval under 06-0399.*

F. STATEMENTS

1. *Release letter issued by Hi-Tech Shutter Group, Inc., dated November 10, 2006, certifying this product to meet the criteria of product tested and approved, and allowing Stormwise Production, Inc. to use the test results approved under Miami-Dade County Approval No. 06-0399, signed by Frank S. Cornelius.*
2. *Acknowledgment letter by Stormwise Production, Inc., dated November 20, 2006, signed by Mr. Camilo Diaz.*
3. *Letter issued by Thornton Tomasetti, dated November 10, 2006, certifying that the drawing (No. 06-539) prepared for Stormwise Production, Inc., signed and sealed by V. John Knezevich, P.E., is engineering wise identical to Hi-Tech Shutter Group, Inc. generic drawing (No. 04-405), revision 2.*
4. *Acceptance Letter issued to Mr. Camilo Diaz on April 15, 2007 and returned signed by Mr. Camilo Diaz on April 16, 2007, indicating to please issue the proposed Notice of Acceptance as submitted and reviewed.*

Helmy A. Makar, P. E., M.S.
Product Control Examiner
NOA No 06-1213.02
Expiration Date: 04/16/2012
Approval Date: 04/16/2007

GENERAL NOTES:

1. THESE APPROVAL DOCUMENTS REPRESENT A SHUTTER SYSTEM ANALYZED WITH THE PROVISION SET FOR THE ISSUANCE OF A NOTICE OF ACCEPTANCE (NOA) BY MIAMI-DADE COUNTY PRODUCT CONTROL DIVISION FOR THE HIGH VELOCITY HURRICANE ZONE (HVHZ) OF THE FLORIDA BUILDING CODE 2004 WITH 2005 SUPPLEMENT.
2. NO INCREASE IN ALLOWABLE STRESS HAS BEEN USED IN THE DESIGN OF THIS PRODUCT. WIND LOAD DURATION FACTOR Cd = 1.6 WAS USED FOR WOOD SCREW DESIGN.
3. DETERMINE THE POSITIVE AND NEGATIVE DESIGN LOADS TO USE WHEN REFERENCING THESE DOCUMENTS IN ACCORDANCE WITH THE GOVERNING CODE AND GOVERNING WIND VELOCITY. FOR WIND LOAD CALCULATIONS IN ACCORDANCE WITH ASCE 7-02, A DIRECTIONALITY FACTOR OF Kd =0.85 SHALL BE USED.
4. THESE APPROVAL DOCUMENTS ARE GENERIC AND DO NOT INCLUDE INFORMATION FOR SITE-SPECIFIC APPLICATION OF THIS SHUTTER SYSTEM.
5. USE OF THESE APPROVAL DOCUMENTS SHALL COMPLY WITH CHAPTER 61G15-23 OF THE FLORIDA ADMINISTRATIVE CODE.
6. THESE APPROVAL DOCUMENTS, ARE SUITABLE TO BE APPLIED BY THE CONTRACTOR PROVIDED THE CONTRACTOR DOES NOT DEVIATE FROM THE CONDITIONS DETAILED HEREIN AND THE CONTRACTOR VERIFIES THAT THE EXISTING STRUCTURE DOES NOT DEVIATE IN EITHER FORM OR MATERIAL FROM THE STRUCTURAL SUBSTRATES DETAILED HEREIN.
7. ANY MODIFICATIONS OR ADDITIONS TO THESE APPROVAL DOCUMENTS WILL VOID THE APPROVAL DOCUMENTS.
8. WHEN THE SITE CONDITIONS DEVIATE FROM THESE APPROVAL DOCUMENTS, THE BUILDING OFFICIAL MAY ELECT ONE OF THE FOLLOWING OPTIONS:
   A) REQUIRE THAT SITE SPECIFIC DOCUMENTS BE PREPARED, SIGNED, DATED AND SEALED BY A LICENSED ENGINEER OR REGISTERED ARCHITECT, WHICH DETAIL AND JUSTIFY THE DEVIATION. SAID DOCUMENTS SHALL BE SUBMITTED TO THE PRODUCT ENGINEER FOR REVIEW AS A CONDITION TO THE BUILDING OFFICIAL GRANTING HIS/HER APPROVAL.
   B) REQUIRE THAT A ONE-TIME SITE SPECIFIC APPROVAL BE APPLIED FOR AND SECURED FROM THE MIAMI-DADE COUNTY PRODUCT CONTROL DIVISION

   WHEN THE SITE CONDITION DEVIATIONS OCCUR WITHIN THE HIGH VELOCITY HURRICANE ZONE AREAS ONLY OPTION "B" SHALL BE ACCEPTED BY THE BUILDING OFFICIAL.
9. EACH SHUTTER ASSEMBLY SHALL BE PERMANETLY LABELED AT THE BOTTOM END OF THE LOCKING SLAT AS FOLLOWS:

   STORMWISE PRODUCTION INC.
   OPA-LOCKA, FLORIDA
   MIAMI-DADE COUNTY PRODUCT APPROVED
10. ALL EXTRUSIONS SHALL BE 6063-T6 ALUMINUM ALLOY EXCEPT CEILING MOUNTED HEADER AND WALL MOUNTED HEADER WHICH SHALL BE 6005-T6, U.O.N
11. ALL SCREWS, BOLTS AND WASHERS SHALL BE 2024-T4 ALUMINUM ALLOY, GALV. OR STAINLESS STEEL WITH A MINIMUM TENSILE STRENGTH OF 60 K.S.I., U.O.N. POP RIVETS SHALL BE 3/16"ϕ 5052 ALUMINUM ALLOY, U.O.N..
12. ALL SHUTTERS SHALL HAVE A LOCKING MECHANISM AT CENTER OR SIDE CLOSURE.
13. CLOSURE STRIP FOR BUILD-OUT MOUNT SHALL BE AN ANGLE OF SUFFICIENT SIZE TO FULLY COVER BOTH OPEN SIDES OF SHUTTER INSTALLATION.
14. TOP AND BOTTOM DETAILS MAY BE INTERCHANGED AS FILED CONDITIONS REQUIRE.
15. FLOOR TRACKS MAY BE REMOVABLE AT NON-STACKING LOCATIONS. USE REMOVABLE ANCHORS SUCH AS ALL POINTS SOLID-SET ANCHORS.

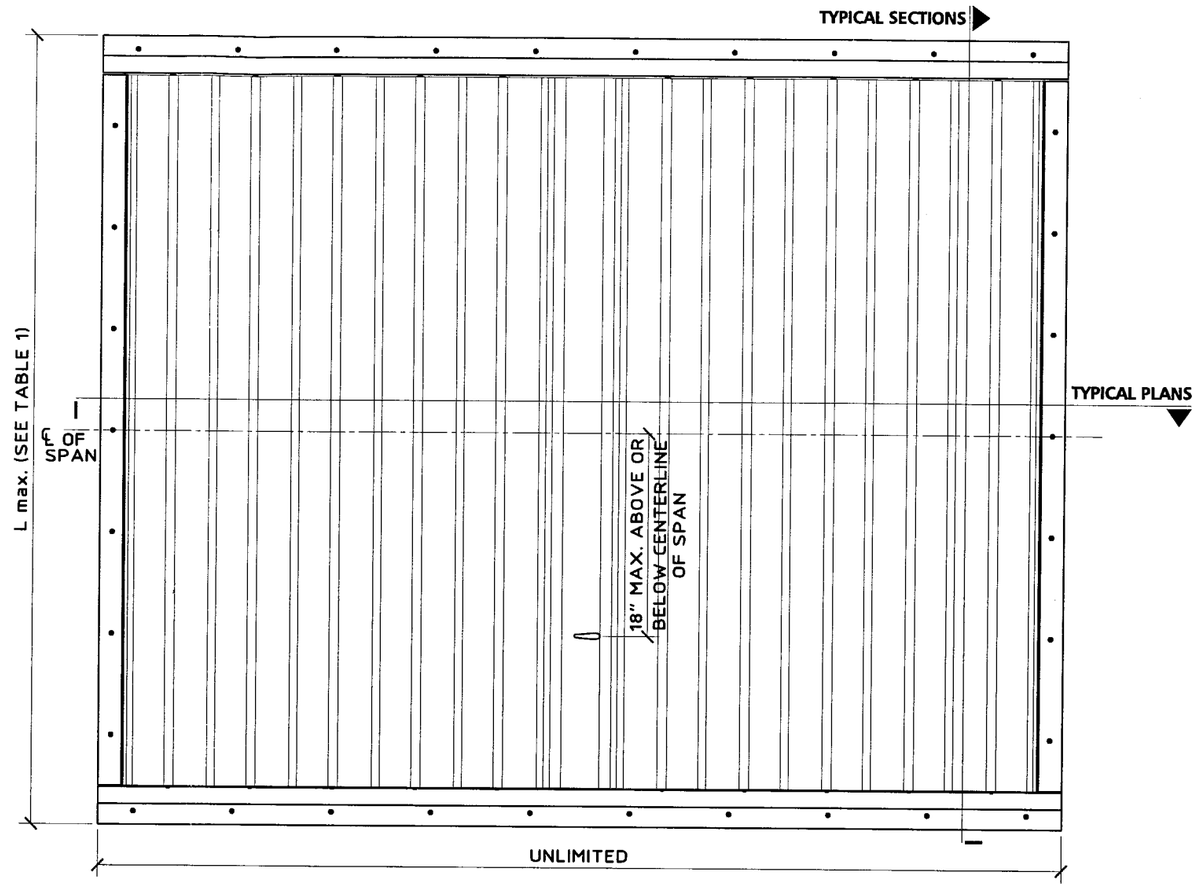

TYPICAL ELEVATION
SCALE: 1" = 1'-0"

Approved as complying with the Florida Building Code
Date 04/16/2007
NOA# 06-1213.01
Miami Dade Product Control Division
By Helmy A. Mekhael

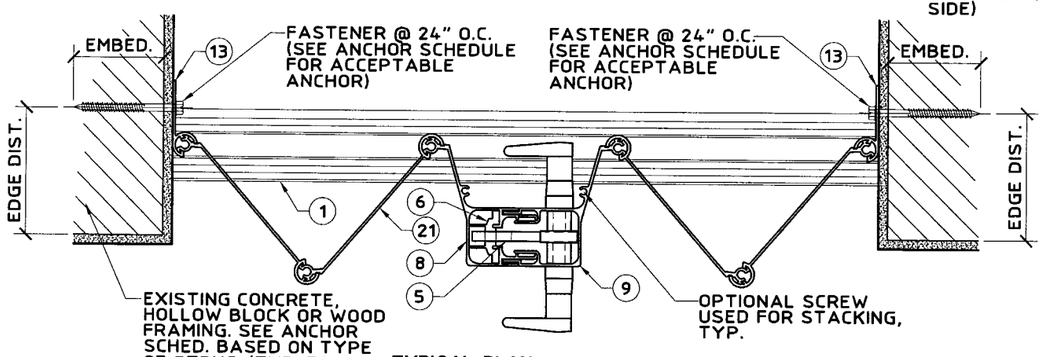

TYPICAL PLAN
SCALE: 3" = 1'-0"

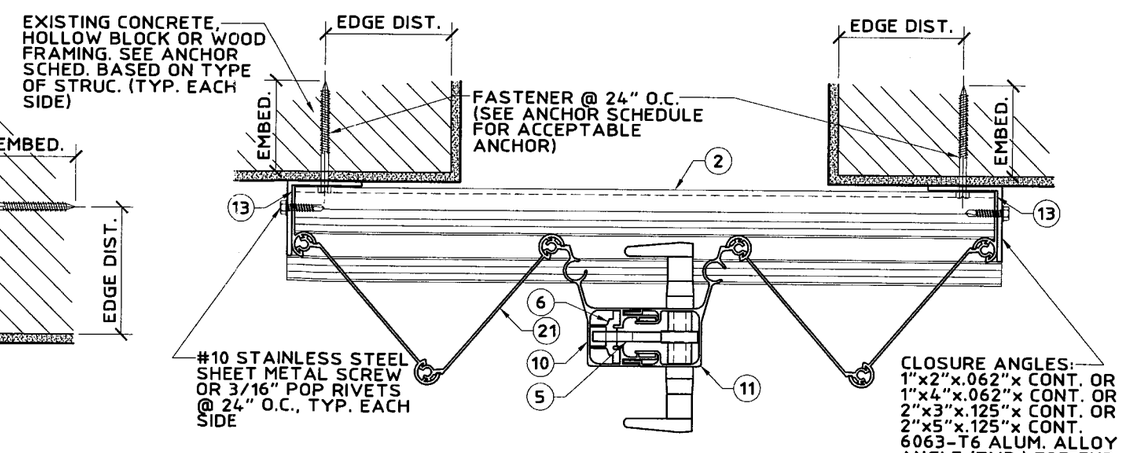

TYPICAL PLAN
SCALE: 3" = 1'-0"

United States Patent Numbers 6,122,868 and 5,755,270

Thornton Tomasetti
330 N. Andrews Ave., Suite 450 • Ft. Lauderdale, FL 33301
T 954.522.3690 • F 954.522.3691 • COA # 7519
Website: www.ThorntonTomasetti.com

Copyright © 2006 Thornton-Tomasetti, Inc.
HT-800 LICENSED BY HI-TECH SHUTTER GROUP, INC.

HT-800 HIGH RISE ACCORDION SHUTTER

Stormwise Production Inc.
13015 N.W. 45th Avenue
Opa-Locka, FL 33054
Tel: (305) 597-7797 • Fax: (305) 597-7795

V.J. Knezevich
Professional Engineer
FL License No.: PE 0070983

NOV 09 2006

revisions

no	date	by	description
1	08/31/2006	VJK	COUNTY COMMENTS
2	10/03/2006	VJK	COUNTY COMMENTS

HTSG I.D. # 061109044O5D

date	07/11/2006
scale AS NOTED	drawn by MCR
design by VJK	checked by VJK
drawing no.	06-539
sheet 1 of 6	

Print Information: P:\FL1\KA\CADD\Associations\Hi-Tech\Stormwise\06-539\R2-sub\06-539-01.dwg MCantu 11/09/2006 09:25:45am 11/09/06 09:23

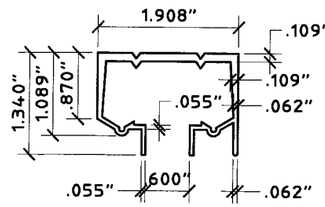

1 6005-T5 ALUM. ALLOY
HEADER-CLG. MOUNTED
SCALE: HALF SIZE

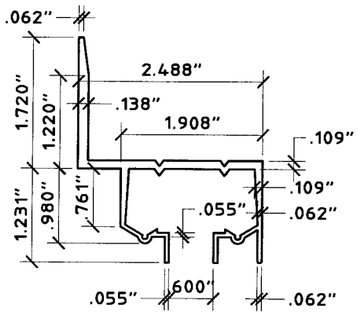

2 6005-T5 ALUM. ALLOY
HEADER-WALL MOUNTED
SCALE: HALF SIZE

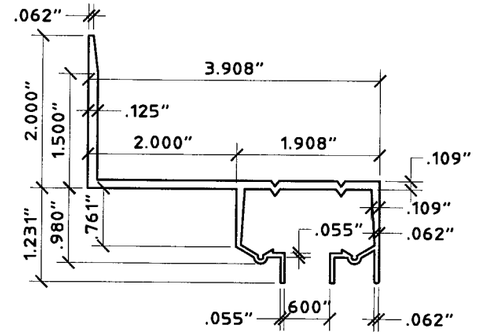

2a 6005-T5 ALUM. ALLOY
2" BUILD-OUT HEADER-WALL MOUNTED
SCALE: HALF SIZE

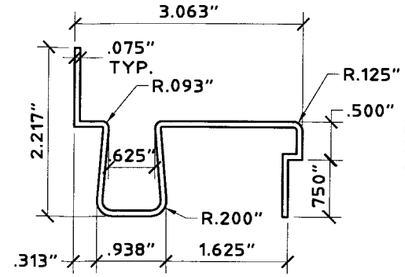

3 ADJ. SILL-TOP
SCALE: HALF SIZE

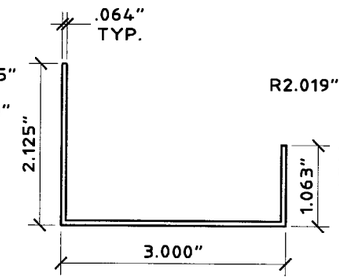

4 ADJ. SILL-BOT.
SCALE: HALF SIZE

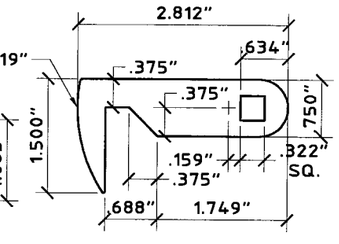

(t = .250" STAINLESS STEEL)
5 LOCKING ARM
SCALE: HALF SIZE

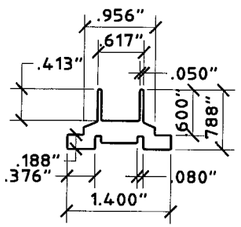

6 LOCK INSERT
SCALE: HALF SIZE

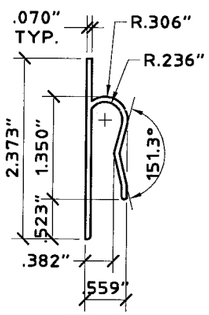

(OPTIONAL)
7 LOCKING CLIP
SCALE: HALF SIZE

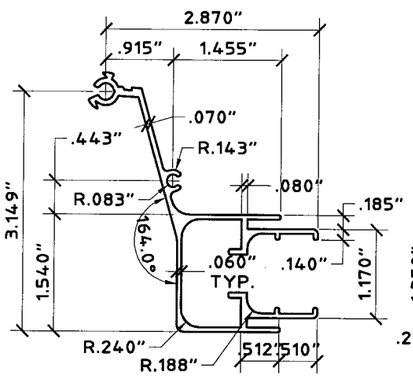

8 CENTER MATE 1
SCALE: HALF SIZE

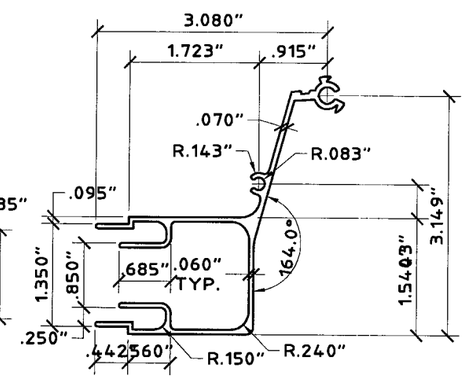

9 CENTER MATE 2
SCALE: HALF SIZE

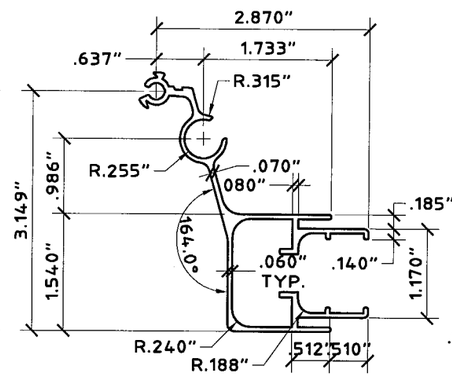

10 CENTER MATE 1 (WITH LOCKING ROD)
SCALE: HALF SIZE

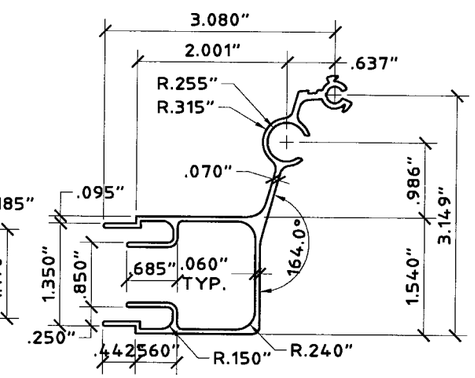

11 CENTER MATE 2 (WITH LOCKING ROD)
SCALE: HALF SIZE

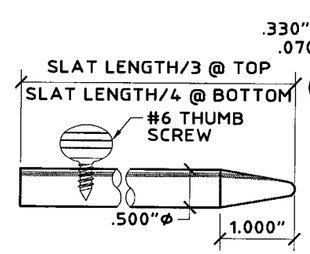

(OPTIONAL)
12 LOCKING PIN
SCALE: HALF SIZE

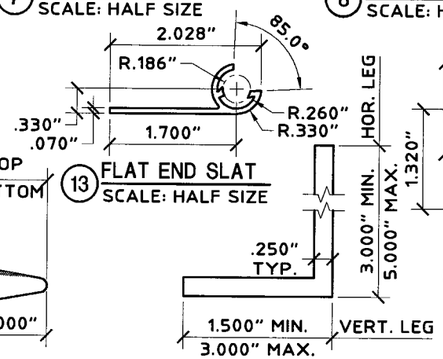

13 FLAT END SLAT
SCALE: HALF SIZE

14 ANGLE
SCALE: HALF SIZE

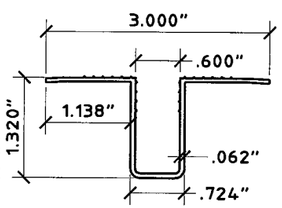

15 RECESSED TRACK
SCALE: HALF SIZE

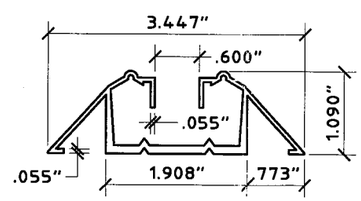

16 WALKOVER
SCALE: HALF SIZE

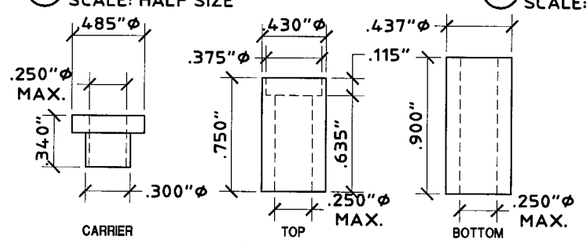

17 BUSHINGS
SCALE: FULL SIZE

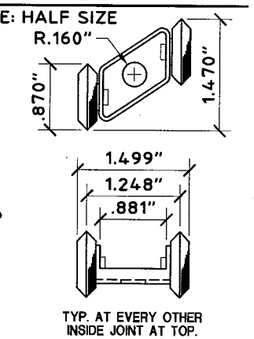

18 ROLLER ASSEMBLY
SCALE: HALF SIZE

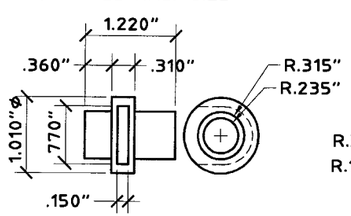

19 LOCKING ARM ALIGNMENT BUSHING (NYLON)
SCALE: HALF SIZE

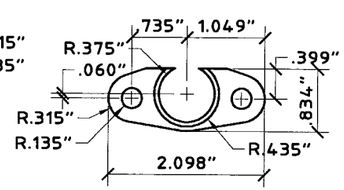

20 HANDLE SHIM (NYLON)
SCALE: HALF SIZE

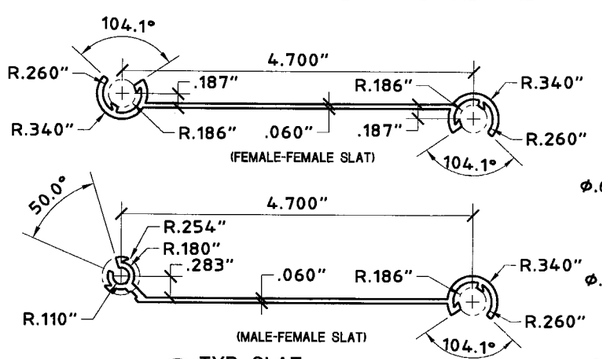

21 TYP. SLAT
SCALE: HALF SIZE

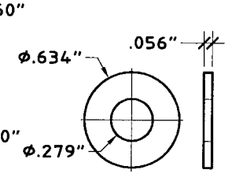

22 WASHER
SCALE: FULL SIZE

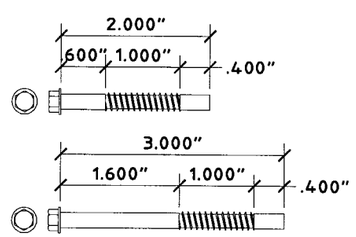

#14 SCREW WITH #10 SCREW
HEAD, 410 HT STAINLESS STEEL
(WITH FLUOROCARBON COATING)

23 #14 SCREW WITH #10 HEAD
SCALE: HALF SIZE

Approved as complying with the Florida Building Code
Date 04/16/2007
NOA# 06-1213.02
Miami Dade Product Control Division
By

United States Patent Numbers 6,122,868 and 5,755,270

Thornton Tomasetti
330 N. Andrews Ave., Suite 450 • Ft. Lauderdale, FL 33301
T 954.522.3690 • F 954.522.3691 • COA # 7519
Website: www.ThorntonTomasetti.com

Copyright © 2006 Thornton-Tomasetti, Inc.
HT-800 LICENSED BY HI-TECH SHUTTER GROUP, INC.

HT-800 HIGH RISE ACCORDION SHUTTER

Stormwise Production Inc.
13015 N.W. 45th Avenue
Opa-Locka, FL 33054
Tel: (305) 597-7797 • Fax: (305) 597-7795

V.J. Knezevich
Professional Engineer
FL License No.: PE 0010983

NOV 09 2006

revisions

no	date	by	description
1	08/31/2006	VJK	COUNTY COMMENTS
2	10/03/2006	VJK	COUNTY COMMENTS

HTSG I.D. # 06110904405D

date	07/11/2006
scale	AS NOTED
drawn by	MCR
design by	VJK
checked by	VJK
drawing no.	06-539
sheet	2 of 6

Print Information: P:\FL1\KA\CADD\Associations\Hi-Tech\Stormwise\06-539\R2-sub\06-539-02.dwg MCantu 11/09/2006 09:25:51am 11/09/06 09:23

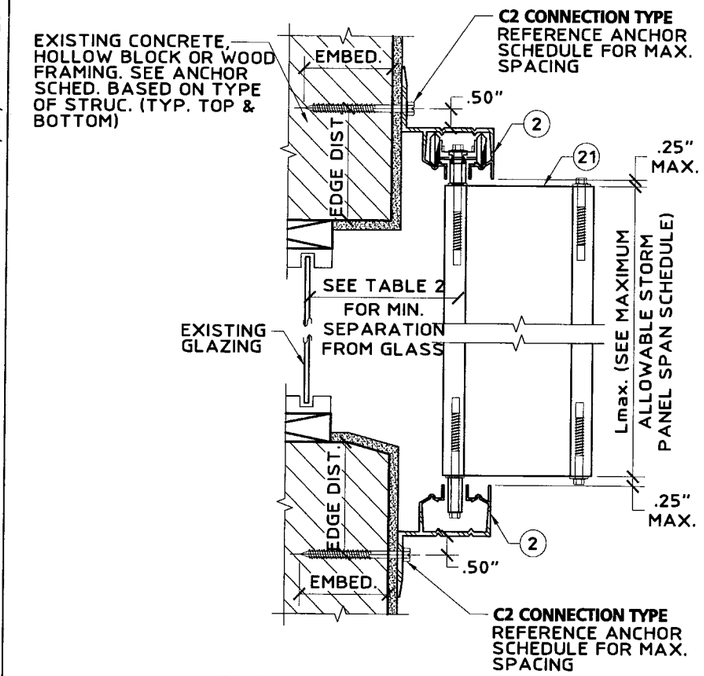

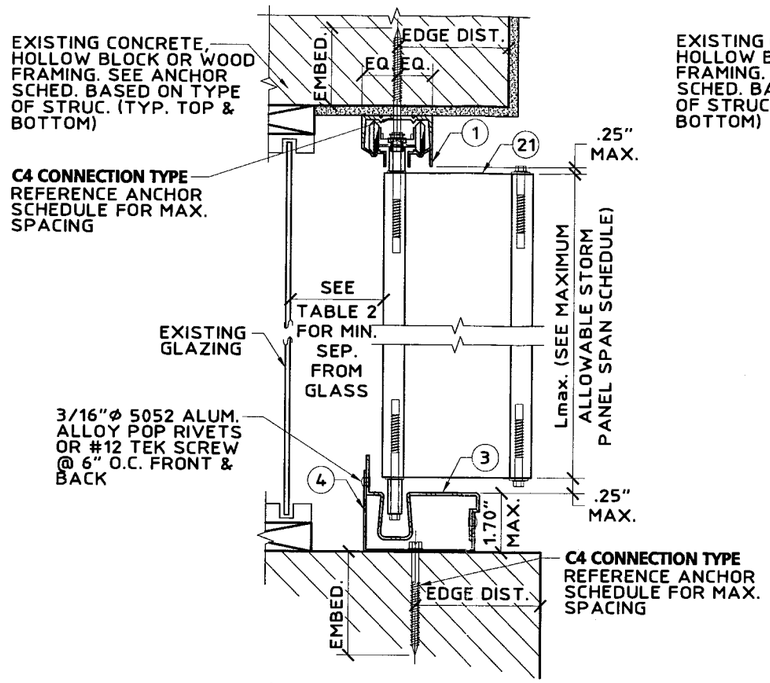

(SEE DETAIL K FOR ALTERNATE FLOOR MOUNT)

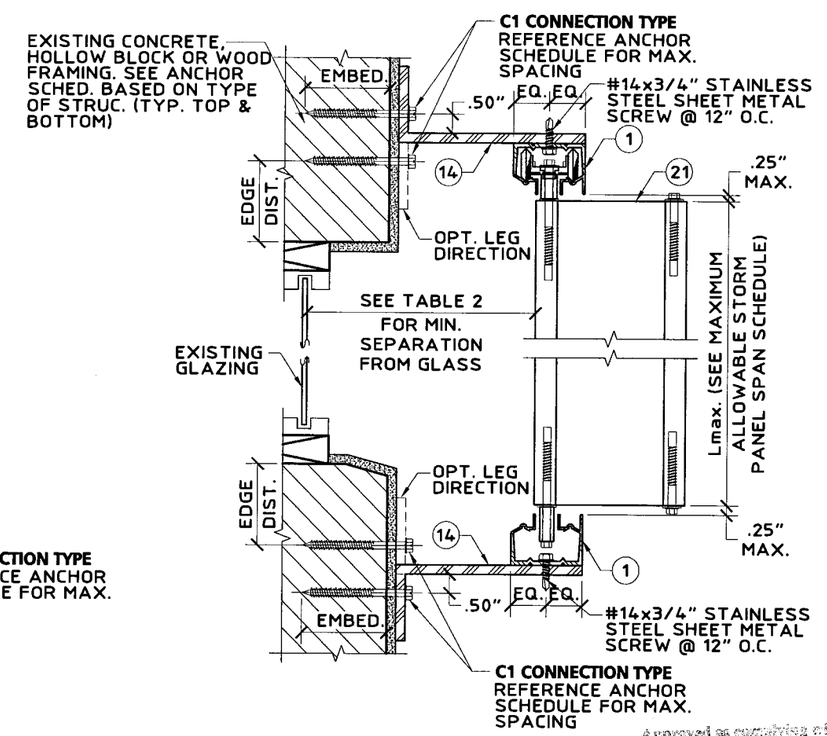

3"x1"x.125"x CONT. 6063-T6 ALUMINUM ALLOY BOX BEAM

(A) WALL MOUNT SECTION
SCALE: 3" = 1'-0"

(B) CEILING/FLOOR MOUNT SECTION
SCALE: 3" = 1'-0"

(C) BUILD-OUT MOUNT SECTION
SCALE: 3" = 1'-0"

Approved as complying with the Florida Building Code
Date 04/16/2007
NOA# 06-1213.02
Miami Dade Product Control
Division
By

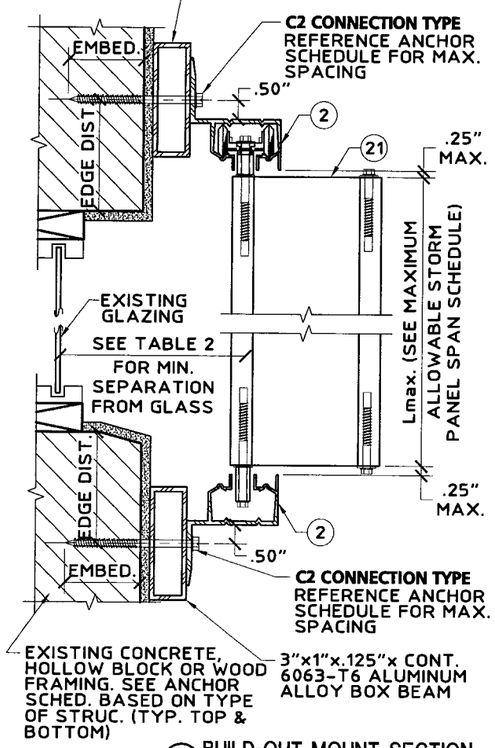

(D) BUILD-OUT MOUNT SECTION
SCALE: 3" = 1'-0"

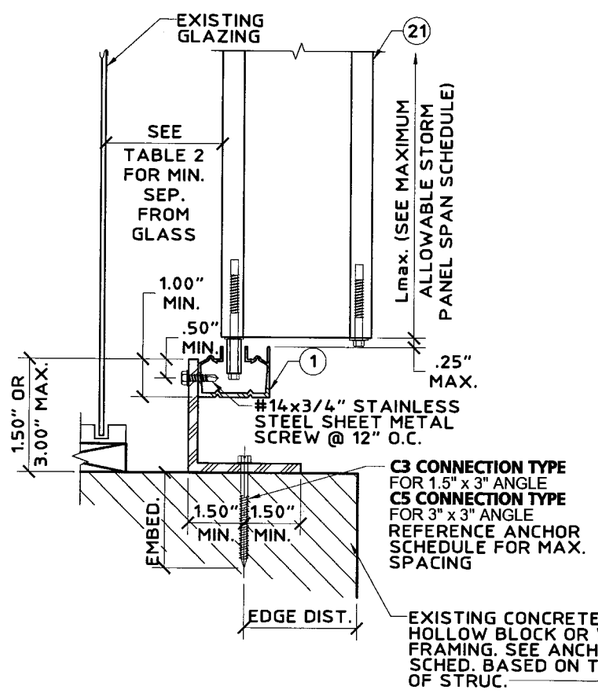

(E) ADJUSTABLE SILL MOUNT SECTION
SCALE: 3" = 1'-0"

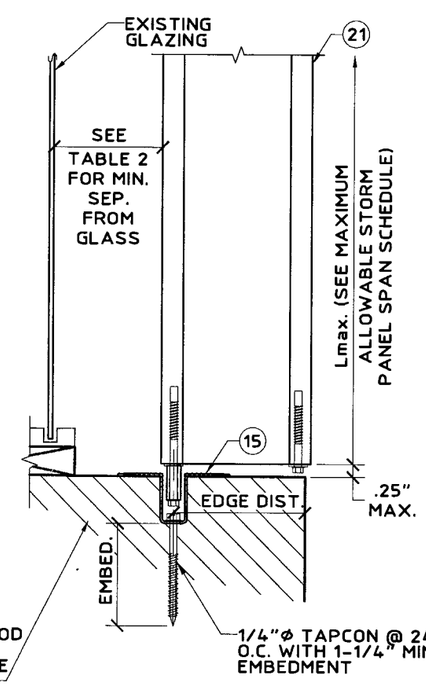

(F) FLOOR MOUNT SECTION
SCALE: 3" = 1'-0"

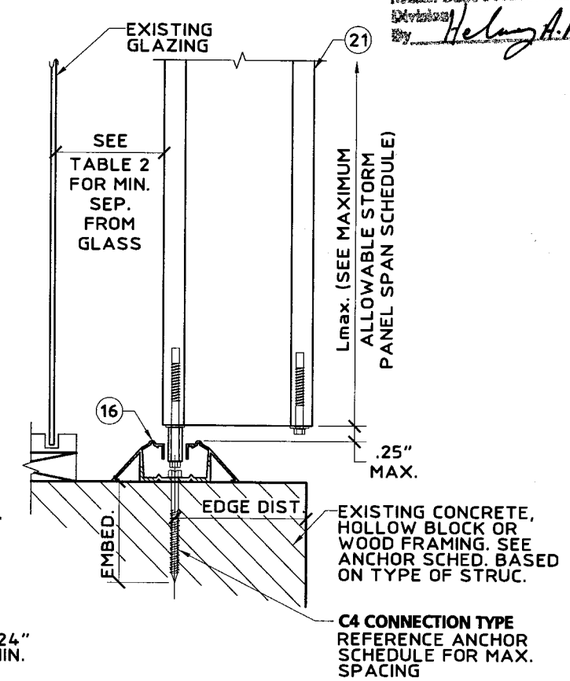

(G) WALKOVER MOUNT SECTION
SCALE: 3" = 1'-0"

United States Patent Numbers 6,122,868 and 5,755,270

Thornton Tomasetti
330 N. Andrews Ave., Suite 450 • Ft. Lauderdale, FL 33301
T 954.522.3690 • F 954.522.3691 • COA # 7519
Website: www.ThorntonTomasetti.com

Copyright © 2006 Thornton-Tomasetti, Inc.

HT-800 LICENSED BY HI-TECH SHUTTER GROUP, INC.

HT-800 HIGH RISE ACCORDION SHUTTER

Stormwise Production Inc.
13015 N.W. 45th Avenue
Opa-Locka, FL 33054
Tel: (305) 597-7795 • Fax: (305) 597-7797

V.J. Knezevich
Professional Engineer
FL License No.: PE 0710983

NOV 09 2006

revisions

no	date	by	description
1	08/31/2006	VJK	COUNTY COMMENTS
2	10/03/2006	VJK	COUNTY COMMENTS

HTSG I.D. # 06110904405D

date 07/11/2006
scale AS NOTED
drawn by MCR
design by VJK
checked by VJK
drawing no. 06-539
sheet 3 of 6

Print Information: P:\FL1\KA\CADD\Associations\Hi-Tech\Stormwise\06-539\R2-sub\06-539-03.dwg MCantu 11/09/2006 09:25:56am 11/09/06 09:23

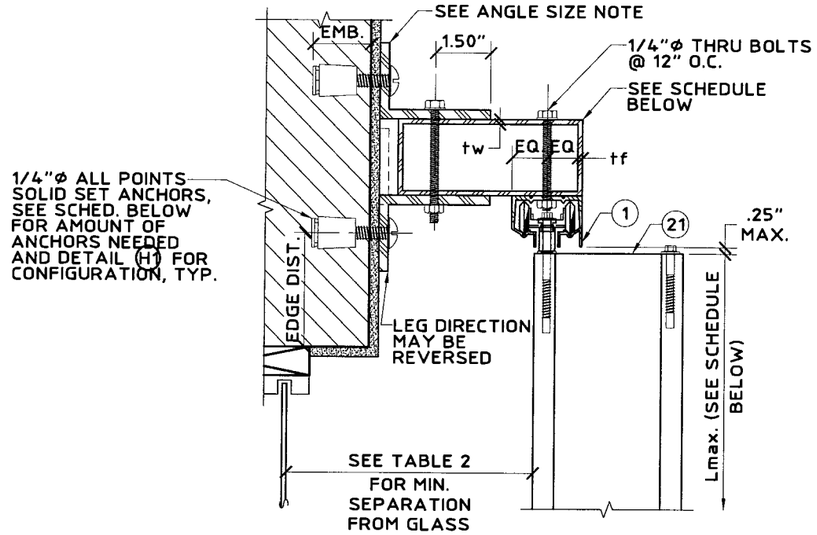

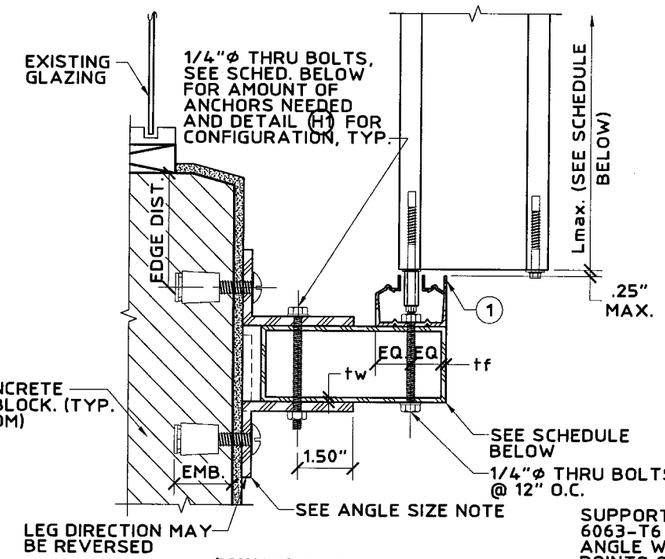

(MAX DESIGN LOAD = ±72.0 PS.F.)

(H) CEILING/FLOOR MOUNT SECTION
SCALE: 3" = 1'-0"

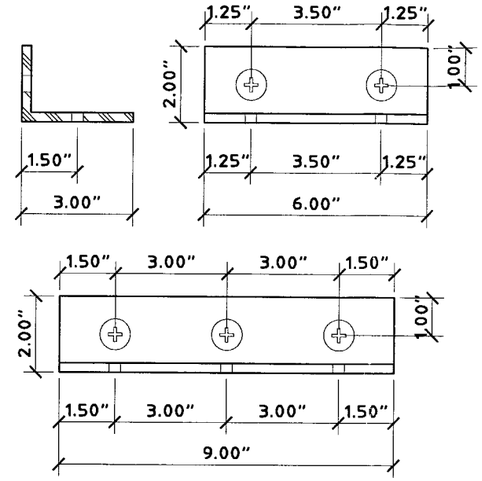

(H1) ANCHOR CONFIGURATION IN ANGLE DETAIL
SCALE: 3" = 1'-0"

BEAM SCHEDULE NOTES:

1. USE BEAM SCHEDULE FOR DETAIL (H).
2. TOP & BOTTOM BEAMS MAY BE USED TOGETHER OR IN COMBINATION WITH OTHER CONNECTION DETAILS. WHERE USED TOGETHER, BEAM MUST BE LIMITED TO TOP BEAM SPANS.

ANGLE SIZE NOTE:

1. 2"x3"x1/4" 6063-T6 ALUMINUM ALLOY ANGLE TOP & BOTTOM.
   A. USE 6" LONG ANGLES FOR TWO REQUIRED, SEE SCHEDULE BELOW BELOW FOR AMOUNT OF ANCHORS NEEDED AND DETAIL (H1) FOR CONFIGURATION, TYP.
   B. USE 9" LONG ANGLES FOR THREE REQUIRED, SEE SCHEDULE BELOW BELOW FOR AMOUNT OF ANCHORS NEEDED AND DETAIL (H1) FOR CONFIGURATION, TYP.

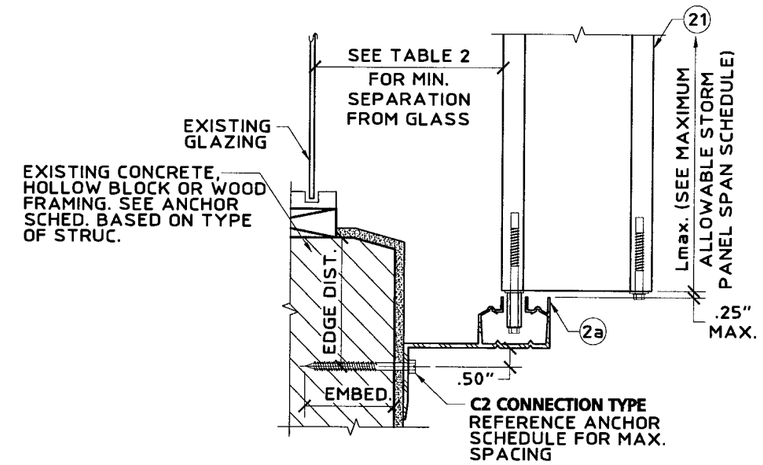

(J) BUILD-OUT MOUNT SECTION
SCALE: 3" = 1'-0"

Approved as complying with the Florida Building Code
Date 04/16/2007
NOA# 06-1213.02
Miami Dade Product Control Division
By

REQUIRED ANCHORS FOR TOP AND BOTTOM BEAMS SCHEDULE							
BEAM SIZE (IN.)	SHUTTER SPAN (FT.-IN.)	TOP BEAM			BOTTOM BEAM		
		BEAM LENGTH	NO. OF THRU BOLTS @ EACH BEAM END	NO. OF ALL POINTS @ EACH ANGLE	BEAM LENGTH	NO. OF THRU BOLTS @ EACH BEAM END	NO. OF ALL POINTS @ EACH ANGLE
2"x5"	8'-0"	7'-3"	2	2	8'-1"	2	2
tw=.125"	10'-0"	6'-10"	2	2	7'-6"	2	2
tf=.125"	13'-7"	6'-4"	2	2	6'-6"	2	3
2"x8"	8'-0"	7'-4"	2	2	11'-6"	2	3
tw=.072"	10'-0"	6'-11"	2	2	10'-4"	3	3
tf=.224"	13'-7"	6'-5"	2	2	8'-11"	3	3
2"x9"	8'-0"	7'-6"	2	2	12'-5"	3	3
tw=.072"	10'-0"	7'-1"	2	2	11'-2"	3	3
tf=.224"	13'-7"	6'-7"	2	3	9'-7"	3	3

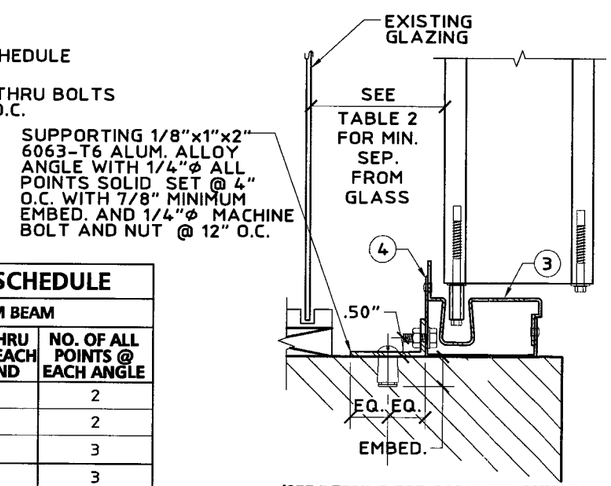

(SEE DETAIL B FOR COMPLETE ANNOTATIONS)

(MAX. POSITIVE DESIGN LOAD = + 100 PSF
NO LIMIT TO NEGATIVE DESIGN LOAD)

(K) ALTERNATE FLOOR MOUNT SECTION
SCALE: 3" = 1'-0"

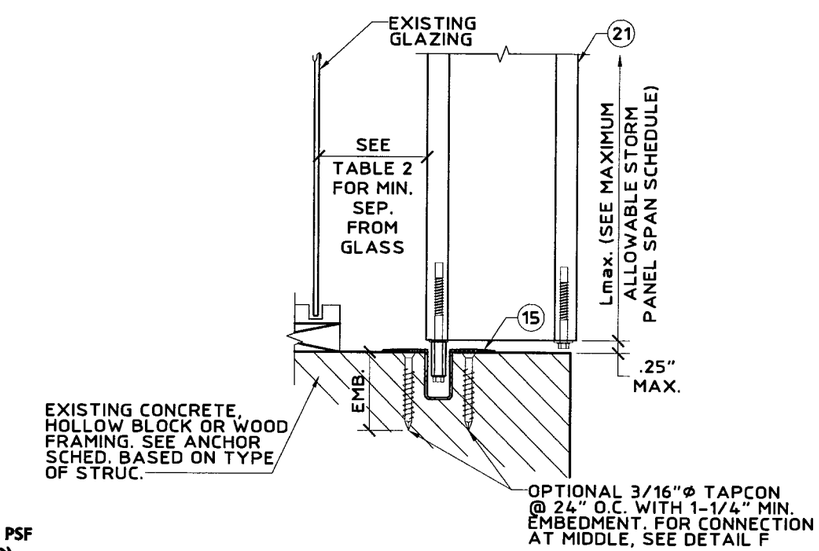

(L) ALTERNATE FLOOR MOUNT SECTION
SCALE: 3" = 1'-0"

United States Patent Numbers 6,122,868 and 5,755,270

Thornton Tomasetti
330 N. Andrews Ave., Suite 450 • Ft. Lauderdale, FL 33301
T 954.522.3690 • F 954.522.3691 • COA # 7519
Website: www.ThorntonTomasetti.com

Copyright © 2006 Thornton-Tomasetti, Inc.
HT-800 LICENSED BY HI-TECH SHUTTER GROUP, INC.

HT-800 HIGH RISE ACCORDION SHUTTER

Stormwise Production Inc.
13015 N.W. 45th Avenue
Opa-Locka, FL 33054
Tel: (305) 597-7797 • Fax: (305) 597-7795

V.J. Knezevich
Professional Engineer
FL License No. PE 0010983

NOV 09 2006

revisions

no	date	by	description
1	08/31/2006	VJK	COUNTY COMMENTS
2	10/03/2006	VJK	COUNTY COMMENTS

HTSG I.D. # 06110904405D

date 07/11/2006
scale AS NOTED
drawn by MCR
design by VJK
checked by VJK
drawing no. 06-539
sheet 4 of 6

Print Information: P:\FL1\KA\CADD\Associations\Hi-Tech\Stormwise\06-539\R2-sub\06-539-04.dwg MCantu 11/09/2006 09:26:02am 11/09/06 09:23

TABLE 1	MAXIMUM ALLOWABLE SHUTTER SPAN SCHEDULE	
DESIGN WIND LOAD (W) (P.S.F.)	ACCORDION SHUTTER SPAN SCHEDULE FOR ALL MOUNTING CONDITIONS	ACCORDION SHUTTER SPAN SCHEDULE FOR ALL MOUNTING CONDITIONS EXCEPT BUILD-OUT MOUNTS
	Lmax (FT-IN)	Lmax (FT-IN)
50.00	14' - 8"	14' - 10"
55.00	14' - 0"	14' - 2"
60.00	13' - 5"	13' - 8"
65.00	12' - 11"	13' - 2"
70.00	12' - 6"	12' - 9"
75.00	12' - 1"	12' - 5"
80.00	11' - 9"	12' - 1"
85.00	11' - 5"	11' - 8"
90.00	11' - 1"	11' - 5"
95.00	10' - 10"	11' - 2"
100.00	10' - 7"	10' - 11"
105.00	10' - 4"	10' - 7"
110.00	10' - 1"	10' - 5"
115.00	9' - 11"	10' - 3"
120.00	9' - 8"	10' - 0"
125.00	9' - 6"	9' - 10"
130.00	9' - 4"	9' - 8"
135.00	9' - 2"	9' - 6"
140.00	9' - 0"	9' - 4"
145.00	8' - 10"	9' - 2"
150.00	8' - 8"	9' - 0"
160.00	8' - 2"	8' - 9"
170.00	7' - 8"	8' - 5"
180.00	7' - 3"	7' - 11"
190.00	6' - 11"	7' - 6"
200.00	6' - 7"	7' - 2"

TABLE 2	MINIMUM SHUTTER SEPARATION FROM GLASS SCHEDULE		
POSITIVE DESIGN LOAD (W) (P.S.F.)	ACTUAL SHUTTER SPAN (L) (FT-IN)	MINIMUM SEPARATION FOR INSTALLATIONS LESS THAN 30'-0" ABOVE GRADE (IN.)	MINIMUM SEPARATION FOR INSTALLATIONS GREATER THAN 30'-0" ABOVE GRADE (IN.)
50.00	5' - 0"	2-3/8"	1"
50.00	7' - 0"	2-3/8"	1-1/8"
50.00	8' - 8"	2-3/8"	1-1/4"
50.00	11' - 0"	2-3/4"	1-5/8"
50.00	14' - 10"	3"	3"
70.00	5' - 0"	2-3/8"	1"
70.00	7' - 0"	2-3/8"	1-1/8"
70.00	8' - 8"	2-3/8"	1-3/8"
70.00	11' - 0"	2-3/4"	1-3/4"
70.00	12' - 9"	2-3/4"	2-1/2"
90.00	5' - 0"	2-3/8"	1"
90.00	7' - 0"	2-3/8"	1-1/8"
90.00	8' - 8"	2-3/8"	1-1/2"
90.00	11' - 4"	2-3/4"	2-1/4"
120.00	5' - 0"	2-3/8"	1"
120.00	7' - 0"	2-3/8"	1-1/4"
120.00	8' - 8"	2-3/8"	1-5/8"
120.00	10' - 1"	2-3/4"	2"

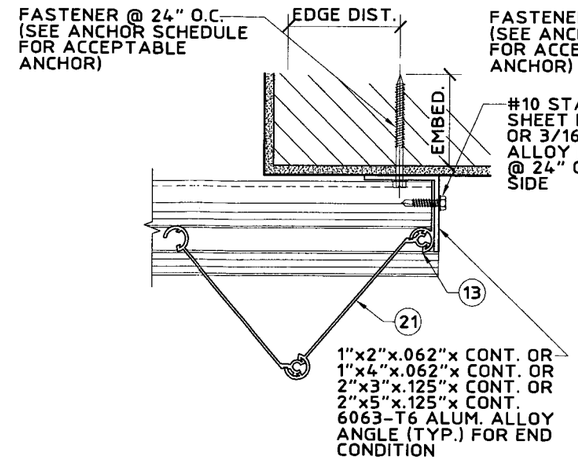

N ALTERNATE CLOSURE DETAIL
SCALE: 3" = 1'-0"

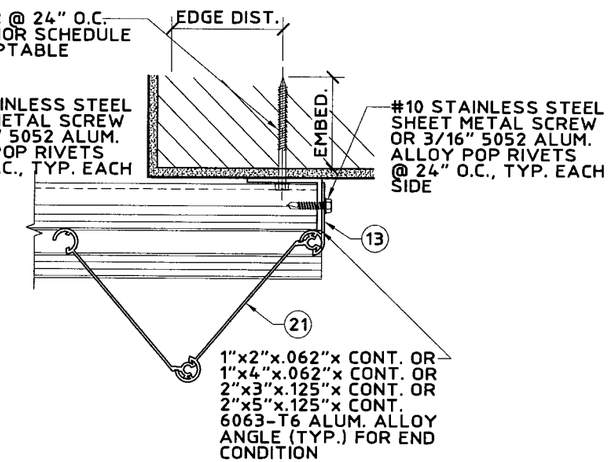

P ALTERNATE CLOSURE DETAIL
SCALE: 3" = 1'-0"

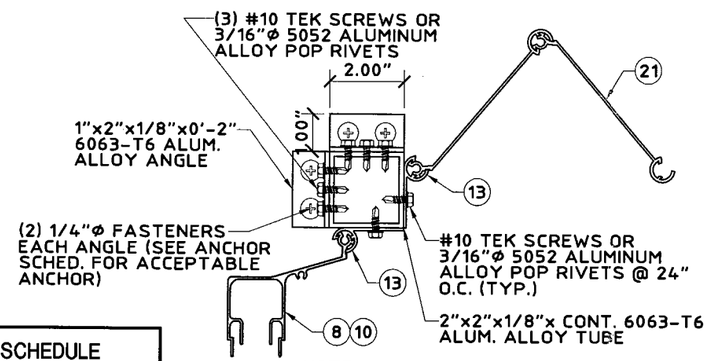

NOTE:
EITHER CONDITION MAY BE TYPICAL FOR EITHER SIDE.

Q CORNER CLOSURE DETAIL
SCALE: 3" = 1'-0"

TABLE 1 NOTE:

FOR DESIGN WIND LOADS BETWEEN TABULATED VALUES USE NEXT HIGHER LOAD OR LINEAR INTERPOLATION MAY BE USED TO DETERMINE ALLOWABLE SPANS.

TABLE 2 NOTE:

ENTER TABLE 2 WITH POSITIVE DESIGN WIND LOAD TO DETERMINE MINIMUM STORM SHUTTER SEPARATION FROM GLASS.

Approved as complying with the Florida Building Code
Date 04/16/2007
NOA# 06-1213.07
Miami Dade Product Control Division
By Helmy A. Mahfouz

United States Patent Numbers 6,122,868 and 5,755,270

Thornton Tomasetti
330 N. Andrews Ave., Suite 450 • Ft. Lauderdale, FL 33301
T 954.522.3690 • F 954.522.3691 • COA # 7519
Website: www.ThorntonTomasetti.com

Copyright © 2006 Thornton-Tomasetti, Inc.

HT-800 LICENSED BY HI-TECH SHUTTER GROUP, INC.

HT-800 HIGH RISE ACCORDION SHUTTER

Stormwise Production Inc.
13015 N.W. 45th Avenue
Opa-Locka, FL 33054
Tel: (305) 597-7797 • Fax: (305) 597-7795

V.J. Knezevich
Professional Engineer
FL License No.: PE 0010983

NOV 09 2006

revisions			
no	date	by	description
1	08/31/2006	VJK	COUNTY COMMENTS
2	10/03/2006	VJK	COUNTY COMMENTS

HTSG I.D. # 06110904405D

date 07/11/2006
scale AS NOTED
drawn by MCR
design by VJK
checked by VJK
drawing no. 06-539
sheet 5 of 6

Print Information: P:\FL1\KA\CADD\Associations\Hi-Tech\Stormwise\06-539\R2-sub\06-539-05.dwg MCantu 11/09/2006 09:26:07am 11/09/06 09:23

ANCHOR SCHEDULE

FASTENER MAXIMUM SPACING (INCHES) REQUIRED FOR VARIOUS DESIGN LOADS AND SPANS

EXIST. STRUC.	ANCHOR TYPE	LOAD (W) P.S.F. MAX. (SEE NOTE 1)	MIN. 2" EDGE DISTANCE															MIN. 3" EDGE DISTANCE													
			SPANS UP TO 8'-0" (SEE NOTE 1)					SPANS UP TO 10'-0" (SEE NOTE 1)					SPANS UP TO 14'-10" (SEE NOTE 1)					SPANS UP TO 8'-0" (SEE NOTE 1)					SPANS UP TO 10'-0" (SEE NOTE 1)					SPANS UP TO 14'-10" (SEE NOTE 1)				
			CONNECTION TYPE (SEE NOTE 3)					CONNECTION TYPE (SEE NOTE 3)					CONNECTION TYPE (SEE NOTE 3)					CONNECTION TYPE (SEE NOTE 3)					CONNECTION TYPE (SEE NOTE 3)					CONNECTION TYPE (SEE NOTE 3)				
			C1	C2	C3	C4	C5	C1	C2	C3	C4	C5	C1	C2	C3	C4	C5	C1	C2	C3	C4	C5	C1	C2	C3	C4	C5	C1	C2	C3	C4	C5
CONCRETE	1/4"Ø ITW TAPCON W/ 1-3/4" MIN. EMBEDMENT (MIN. 3,192 P.S.I. CONCRETE)	72.0	11	12	8	7	6	9	12	6	6	5	6	7	4	4	3	12	12	10	9	7	9	12	8	7	6	6	7	5	4	4
		100.0	8	12	6	5	4	7	8	5	4	3	4	3	3			9	12	7	6	5	7	9	6	5	4	5	3	4	3	
		150.0	6	5	4	3	3	5	3	3			4	3	3			6	5	5	4	3	5	3	4	3		5	3	4	3	
		175.0	5	3	3	3		5	3	3			4	3	3			5	4	4	3	3	5	3	4	3		5	3	4	3	
		200.0	5	3	3			5	3	3			4	3	3			5	3	4	3		5	3	4	3		5	3	4	3	
	1/4"Ø ELCO TAPCON W/ 1-3/4" MIN. EMBEDMENT (MIN. 3,320 P.S.I. CONCRETE)	72.0	8	12	9	7	6	6	12	7	5	4	4	5	4	4	3	10	12	11	9	7	8	12	9	7	6	5	6	6	5	4
		100.0	6	11	6	5	4	5	6	5	4	3	3		3			8	12	8	6	5	6	7	6	5	4	4	3	4	3	
		150.0	4	3	4	3		3		3			3		3			5	4	5	4	3	4	3	4	3		4	3	4	3	
		175.0	4		3	3		3		3			3		3			5	3	4	3	3	4	3	4	3		4	3	4	3	
		200.0	3		3			3		3			3		3			4	3	4	3		4	3	4	3		4	3	4	3	
	5/16"Ø ITW XL TAPCON WITH 1-3/4" MIN. EMBEDMENT (MIN. 2,900 P.S.I. CONCRETE)	72.0	11	12	12	10	8	9	12	10	8	6	6	7	7	5	4	12	12	12	11	9	10	12	11	9	7	6	7	7	6	5
		100.0	9	12	9	7	6	7	8	7	6	4	5	3	5	4	3	9	12	10	8	6	7	9	8	6	5	5	3	5	4	3
		150.0	6	5	6	5	4	5	3	5	4	3	5	3	5	4	3	6	5	6	5	4	5	3	5	4	3	5	3	5	4	3
		175.0	5	3	5	4	3	5	3	5	4	3	5	3	5	4	3	6	4	5	4	3	5	3	5	4	3	5	3	5	4	3
		200.0	5	3	5	4	3	5	3	5	4	3	5	3	5	4	3	5	3	5	4	3	5	3	5	4	3	5	3	5	4	3
	* 1/4"x20x1" ALL POINTS SOLID-SET ANCHOR, BOLT & SPECIALTY CO. W/ 7/8" EMBED. (MIN. 3,000 P.S.I. CONCRETE)	72.0	9	12	10	8	6	7	12	8	6	5	5	5	5	4	3	11	12	12	10	8	9	12	10	8	6	6	7	7	5	4
		100.0	7	12	7	6	4	5	6	5	4	3	3		3	3		9	12	9	7	6	7	8	7	6	4	4	3	5	4	3
		150.0	5	4	4	4	3	4		3	3		3		3	3		6	5	6	5	4	5	3	5	4	3	4	3	5	4	3
		175.0	4	3	4	3		4		3	3		3		3	3		5	3	5	4	3	5	3	5	4	3	4	3	5	4	3
		200.0	4		3	3		4		3	3		3		3	3		5	3	5	4	3	5	3	5	4	3	4	3	5	4	3
HOLLOW CONCRETE BLOCK	1/4"Ø ITW TAPCON W/ 1-1/4" MIN. EMBEDMENT	72.0	3	6	4	3			5	3								4	8	5	4	3	3	6	4	3						
		100.0		5	3													3	5	3	3			3	3							
		150.0																														
		175.0																														
		200.0																														
	1/4"Ø ELCO TAPCON W/ 1-1/4" MIN. EMBEDMENT	72.0	3	7	5	4	3	3	5	4	3				3			4	9	6	5	4	3	7	5	4	3			3		
		100.0		5	4	3				3								3	6	5	3			3	4	3						
		150.0																		3												
		175.0																														
		200.0																														
	** 5/16"Ø ITW XL TAPCON WITH 1-1/4" MIN. EMBEDMENT	72.0																5	10	8	6	5	4	8	7	5	4	3	3	4	3	
		100.0																4	7	6	4	3	3	4	5	3				3		
		150.0																3		4	3				3					3		
		175.0																		3					3					3		
		200.0																		3					3					3		
	* 1/4"x20x1" ALL POINTS SOLID-SET ANCHOR, BOLT & SPECIALTY CO. W/ 7/8" EMBED.	72.0	7	12	6	5	4	6	11	5	4	3	4	4	3	3		8	12	9	7	6	6	12	7	6	4	4	5	5	4	3
		100.0	5	10	4	4	3	4	5	3	3		3					6	11	6	5	4	5	6	5	4	3	3		3	3	
		150.0	4	3	3			3					3					4	3	4	3		3		3	3		3		3	3	
		175.0	3					3					3					4		3	3		3		3	3		3		3	3	
		200.0	3					3					3					3		3	3		3		3	3		3		3	3	

ANCHOR SCHEDULE

FASTENER MAXIMUM SPACING (INCHES) REQUIRED FOR VARIOUS DESIGN LOADS AND SPANS

EXIST. STRUC.	ANCHOR TYPE	LOAD (W) P.S.F. MAX. (SEE NOTE 1)	MIN. 3/4" EDGE DISTANCE														
			SPANS UP TO 8'-0" (SEE NOTE 1)					SPANS UP TO 10'-0" (SEE NOTE 1)					SPANS UP TO 14'-10" (SEE NOTE 1)				
			CONNECTION TYPE (SEE NOTE 3)					CONNECTION TYPE (SEE NOTE 3)					CONNECTION TYPE (SEE NOTE 3)				
			C1	C2	C3	C4	C5	C1	C2	C3	C4	C5	C1	C2	C3	C4	C5
WOOD	2" MIN. 1/4"Ø x MIN. 3" LONG LAG SCREW W/ MIN. 2" EMBED. SHEAR PARALLEL OR PERP. TO WOOD GRAIN	72.0	12	12	6	6	5	12	12	5	5	4	8	11	3	3	3
		100.0	12	12	4	4	4	10	12	3	3	3	7	5			
		150.0	9	8	3	3		7	5				7	5			
		175.0	8	5				7	5				7	5			
		200.0	7	5				7	5				7	5			

ANCHOR NOTES:

1. **SPANS AND LOADS SHOWN HERE ARE FOR DETERMINING ANCHOR SPACING ONLY. ALLOWABLE STORM PANEL SPANS FOR SPECIFIC LOADS MUST BE LIMITED TO THOSE SHOWN IN TABLE 1.**
2. ENTER ANCHOR SCHEDULE BASED ON THE EXISTING STRUCTURE MATERIAL, ANCHOR TYPE AND EDGE DISTANCE. SELECT DESIGN LOAD GREATER THAN OR EQUAL TO NEGATIVE DESIGN LOAD ON SHUTTER AND SELECT SPAN GREATER THAN OR EQUAL TO SHUTTER SPAN.
3. SEE MOUNTING SECTION DETAILS FOR IDENTIFICATION OF CONNECTION TYPE.
4. EXISTING STRUCTURE MAY BE CONCRETE, HOLLOW BLOCK OR WOOD FRAMING. REFERENCE ANCHOR SCHEDULE FOR PROPER ANCHOR TYPE BASED ON TYPE OF EXISTING STRUCTURE.
5. ANCHORS SHALL BE INSTALLED IN ACCORDANCE WITH MANUFACTURERS' RECOMMENDATIONS.
6. MINIMUM EMBEDMENT AND EDGE DISTANCE EXCLUDES WALL FINISH OR STUCCO.
7. WHERE EXISTING STRUCTURE IS POST-TENSIONED CONCRETE CONTRACTOR SHALL LOCATE CABLES PRIOR TO ANCHORING AND COORDINATE ANCHORAGE SUCH THAT CABLES ARE NOT DAMAGED.
8. WHERE EXISTING STRUCTURE IS WOOD FRAMING, WOOD FRAMING CONDITIONS VARY. FIELD VERIFY THAT FASTENERS ARE INTO ADEQUATE WOOD FRAMING MEMBERS, NOT PLYWOOD. FASTENING TO PLYWOOD IS ACCEPTABLE ONLY FOR SIDE CLOSURE PIECES.
9. WHERE LAG SCREWS FASTEN TO NARROW FACE OF STUD FRAMING, FASTENER SHALL BE LOCATED IN CENTER OF NOMINAL 2" x 4" (MIN.) WOOD STUD. 3/4" EDGE DISTANCE IS ACCEPTABLE FOR WOOD FRAMING. WOOD STUD SHALL BE "SOUTHERN PINE" G=0.55 OR GREATER DENSITY. LAG SCREWS SHALL HAVE PHILLIPS PAN HEAD OR HEX HEAD.
10. MACHINE SCREWS SHALL HAVE MINIMUM OF 1/2" ENGAGEMENT OF THREADS IN BASE ANCHOR AND MAY HAVE EITHER A PAN HEAD, TRUSS HEAD, OR WAFER HEAD (SIDEWALK BOLT), U.O.N.
11. ▨ DESIGNATES ANCHOR CONDITIONS WHICH ARE NOT ACCEPTABLE USES.
12. * DESIGNATES ANCHORS WHICH ARE REMOVABLE BY REMOVING MACHINE SCREW, NUT OR WASHERED WINGNUT.
13. ** THE MINIMUM EDGE DISTANCE FOR THE 5/16"Ø ITW XL TAPCON EMBEDDED IN HOLLOW CONCRETE BLOCK IS 4".
14. ALL MASONRY OR WOOD ANCHORS TO BE LOCATED ON ALUMINUM EXTRUSION A MIN. OF 1/2" AND A MAX. OF 2" FROM END OR EDGE OF EXTRUSION.

Approved as complying with the Florida Building Code
Date 04/16/2007
NOA# 06-1213.02
Miami Dade Product Control Division
By

United States Patent Numbers 6,122,868 and 5,755,270

Thornton Tomasetti
330 N. Andrews Ave., Suite 450 • Ft. Lauderdale, FL 33301
T 954.522.3690 • F 954.522.3691 • COA # 7519
Website: www.ThorntonTomasetti.com

Copyright © 2006 Thornton-Tomasetti, Inc.
HT-800 LICENSED BY HI-TECH SHUTTER GROUP, INC.

HT-800 HIGH RISE ACCORDION SHUTTER

Stormwise Production Inc.
13015 N.W. 45th Avenue
Opa-Locka, FL 33054
Tel: (305) 597-7795 • Fax: (305) 597-7797

V.J. Knezevich
Professional Engineer
FL License No.: PE 0010983

NOV 09 2006

revisions

no	date	by	description
1	08/31/2006	VJK	COUNTY COMMENTS
2	10/03/2006	VJK	COUNTY COMMENTS

HTSG I.D. # 061109044O5D

date	07/11/2006
scale	AS NOTED
drawn by	MCR
design by	VJK
checked by	VJK
drawing no.	06-539

sheet 6 of 6

Print Information: P:\FL1\KA\CADD\Associations\Hi-Tech\Stormwise\06-539\R2-sub\06-539-06.dwg MCantu 11/09/2006 09:26:10am 11/09/06 09:23