MIAMI-DADE COUNTY, FLORIDA
METRO-DADE FLAGLER BUILDING
140 WEST FLAGLER STREET, SUITE 1603
MIAMI, FLORIDA 33130-1563
(305) 375-2901 FAX (305) 375-2908
www.miamidade.gov/buldingcode.com

BUILDING CODE COMPLIANCE OFFICE (BCCO)
PRODUCT CONTROL DIVISION

NOTICE OF ACCEPTANCE (NOA)

Fulton Windows.
275 Britannia Road East
Mississauga, Ontario LAZ2E7

SCOPE:

This NOA is being issued under the applicable rules and regulations governing the use of construction materials. The documentation submitted has been reviewed by Miami-Dade County Product Control Division and accepted by the Board of Rules and Appeals (BORA) to be used in Miami Dade County and other areas where allowed by the Authority Having Jurisdiction (AHJ).

This NOA shall not be valid after the expiration date stated below. The Miami-Dade County Product Control Division (In Miami Dade County) and/or the AHJ (in areas other than Miami Dade County) reserve the right to have this product or material tested for quality assurance purposes. If this product or material fails to perform in the accepted manner, the manufacturer will incur the expense of such testing and the AHJ may immediately revoke, modify, or suspend the use of such product or material within their jurisdiction. BORA reserves the right to revoke this acceptance, if it is determined by Miami-Dade County Product Control Division that this product or material fails to meet the requirements of the applicable building code.

This product is approved as described herein, and has been designed to comply with the Florida Building Code, including the High Velocity Hurricane Zone.

DESCRIPTION: Series 1390 Aluminum Sliding Glass Door – L.M.I.

APPROVAL DOCUMENT: Drawing No. **F1390-01**, titled "Series 1390 Sliding Glass Door (LMI)", sheets 1 through 9 of 9, dated 12/11/06, prepared by Wolters Engineering, signed and sealed by Scott Wolters, P.E., bearing the Miami-Dade County Product Control Approval stamp with the Notice of Acceptance number and approval date by the Miami-Dade County Product Control Division.

MISSILE IMPACT RATING: Large and Small Missile Impact Resistant

LABELING: Each unit shall bear a permanent label with the manufacturer's name or logo, city, state and following statement: "Miami-Dade County Product Control Approved", unless otherwise noted herein.

RENEWAL of this NOA shall be considered after a renewal application has been filed and there has been no change in the applicable building code negatively affecting the performance of this product.

TERMINATION of this NOA will occur after the expiration date or if there has been a revision or change in the materials, use, and/or manufacture of the product or process. Misuse of this NOA as an endorsement of any product, for sales, advertising or any other purposes shall automatically terminate this NOA. Failure to comply with any section of this NOA shall be cause for termination and removal of NOA.

ADVERTISEMENT: The NOA number preceded by the words Miami-Dade County, Florida, and followed by the expiration date may be displayed in advertising literature. If any portion of the NOA is displayed, then it shall be done in its entirety.

INSPECTION: A copy of this entire NOA shall be provided to the user by the manufacturer or its distributors and shall be available for inspection at the job site at the request of the Building Official.

This NOA consists of this page 1 and evidence pages E-1 and E-2, as well as approval document mentioned above.

The submitted documentation was reviewed by **Manuel Perez, P.E.**

Fulton Windows

NOTICE OF ACCEPTANCE: EVIDENCE SUBMITTED

A. DRAWINGS

1. Manufacturer's die drawings and sections.
2. Drawing No **F1390-01**, Sheets 1 through 9 of 9, titled "Series 1390 Sliding Glass Door (LMI)", dated 12/11/06, prepared by Wolters Engineering, signed and sealed by Scott Wolters, P.E.

B. TESTS

1. Test reports on 1) Air Infiltration Test, per FBC, TAS 202-94
   2) Uniform Static Air Pressure Test, Loading per FBC TAS 202-94
   3) Water Resistance Test, per FBC, TAS 202-94
   4) Large Missile Impact Test per FBC, TAS 201-94
   5) Cyclic Wind Pressure Loading per FBC, TAS 203-94
   6) Forced Entry Test, per FBC 2411 3.2.1, TAS 202-94

   along with marked-up drawings and installation diagram of an aluminum sliding glass door, glazed with 9/16" HS laminated glass, prepared by Hurricane Test Laboratory LLC, Test Report No. **HTL-0376-1022-04**, dated 10/22/04 to 12/14/04, signed and sealed by Vinu Abraham, P.E.
2. Test reports on 1) Air Infiltration Test, per FBC, TAS 202-94
   2) Uniform Static Air Pressure Test, Loading per FBC TAS 202-94
   3) Water Resistance Test, per FBC, TAS 202-94
   4) Large Missile Impact Test per FBC, TAS 201-94
   5) Cyclic Wind Pressure Loading per FBC, TAS 203-94
   6) Forced Entry Test, per FBC 2411 3.2.1, TAS 202-94

   along with marked-up drawings and installation diagram of an aluminum sliding glass door, glazed with 9/16" HS laminated glass, prepared by Hurricane Test Laboratory LLC, Test Report No. **HTL-0376-0101-06**, dated 12/21/05 to 01/21/06, signed and sealed by Vinu Abraham, P.E.

C. CALCULATIONS

1. Anchor verification calculations and structural analysis, complying with FBC-2004, prepared by Wolters Engineering, Inc., dated 12/27/06, signed and sealed by Scott Wolters, P.E.
   Complies with ASTM E1300-98

D. QUALITY ASSURANCE

1. Miami Dade Building Code Compliance Office (BCCO).

Manuel Perez, P.E.
Product Control Examiner
NOA No. 07-0103.04
Expiration Date: August 9, 2012
Approval Date: August 9, 2007

NOTICE OF ACCEPTANCE: EVIDENCE SUBMITTED

E. MATERIAL CERTIFICATIONS

1. Notice of Acceptance No. **03-0421.01** issued to Solutia, Inc. for "Saflex HP a polyvinyl butyral interlayer for lamination of glass", dated 05/22/03 and expiring on 04/22/08.
2. Notice of Acceptance No. **01-1204.01** issued to E.I. DuPont de Nemours & Co., Inc. for "Sentryglass ® Plus", dated 01/05/06 and expiring on 12/11/10.
3. Notice of Acceptance No. **03-0415.13** issued to Solutia, Inc. for "Vanceva Composites used for lamination of glass", dated 12/11/03 and expiring on 12/11/08.

F. STATEMENTS

1. Statement letter of conformance, dated December 27, 2006, signed and sealed by Scott Wolters, P.E.
2. Statement letter of no financial interest, dated December 27, 2006, signed and sealed by Scott Wolters, P.E.
3. Laboratory compliance letter for Test Reports No. **HTL- 0376-1022-04** and **HTL-0376-0101-06**, issued by Hurricane Test Laboratory, LLC, dated December 22, 2006, signed and sealed by Vinu J. Abraham, P.E.

G. OTHER

1. None.

Manuel Perez, P.E.
Product Control Examiner
NOA No. 07-0103.04
Expiration Date: August 9, 2012
Approval Date: August 9, 2007

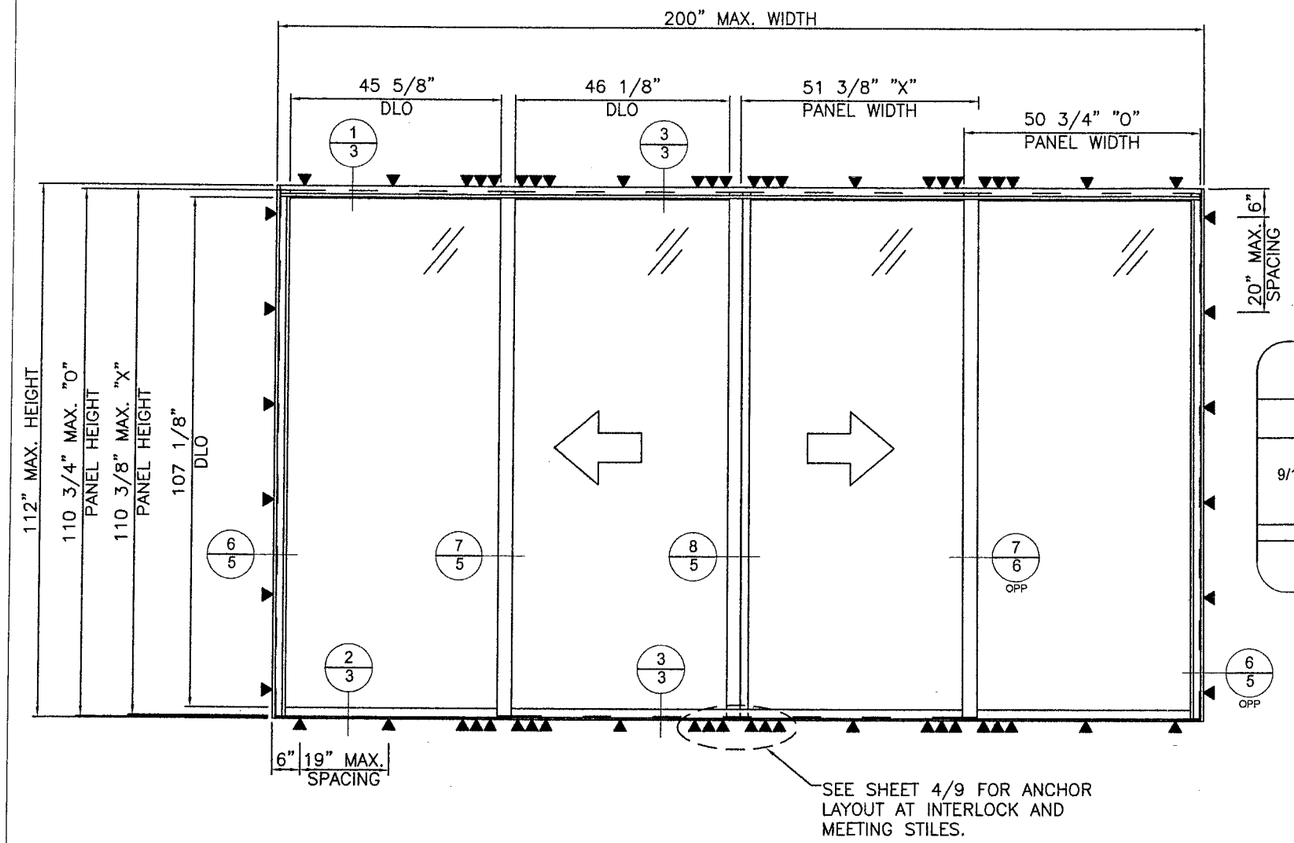

DESIGN PRESSURE
+/- 110 PSF

GLASS OPTIONS

TYPE		OUTBOARD LITE	INTERLAYER	INBOARD LITE
9/16" LAMINATED (LMI)	A	1/4" Heat Strengthened	0.090" SentryGlas Plus (NOA# 01-1204.01)	1/4" Heat Strengthened
	E	1/4" Heat Strengthened	0.075" Vanceva Composite (NOA# 03-0415.13)	1/4" Heat Strengthened

MAXIMUM DLO SIZE = 46 1/8" x 107 1/8" (34.34 ft²)

FULTON 1390 SERIES SLIDING DOOR

6 5/8" SLIDING GLASS DOOR (OXXO) GLAZED FOR LARGE MISSILE IMPACT. (SHUTTERS NOT REQUIRED)

GENERAL NOTES:

1. SEE SHEET 2 FOR OTHER APPROVED CONFIGURATIONS.
2. THIS SYSTEM IS DESIGNED TO COMPLY WITH THE REQUIREMENTS OF THE 2004 FLORIDA BUILDING CODE, CHAPTERS 16, 17 AND 24, INCLUDING THE PROVISIONS FOR HVHZ, & ASTM 1300-98.
3. DESIGN LOADS MUST BE CALCULATED BY A PROFESSIONAL ENGINEER OR ARCHITECT FOR EACH PROJECT. THE PROJECT PRESSURE CANNOT EXCEED THE DESIGN PRESSURE LISTED ABOVE.
4. ALL EXTRUSIONS ARE ALUMINUM ALLOY 6063-T6. OTHER THAN NOTED IN BILL OF MATERIALS.
5. WOOD BUCKS BY OTHERS MUST BE ANCHORED PROPERLY TO TRANSFER IMPOSED LOADS TO THE STRUCTURE BEYOND.
6. ANCHORS SHALL BE AS LISTED ON SHEET 4/9 AND SPACED AS SHOWN ABOVE. ANCHOR EMBEDMENT IN BASE MATERIAL SHALL BE BEYOND WALL DRESSING OR STUCCO.
6. MATERIALS INCLUDING BUT NOT LIMITED TO STEEL/METAL SCREWS THAT COME INTO CONTACT WITH OTHER DISSIMILAR MATERIALS SHALL MEET THE REQUIREMENTS OF THE 2004 FLORIDA BUILDING CODE, SECTION 2003.8.4.

OPTIONAL HEAD RECEPTOR

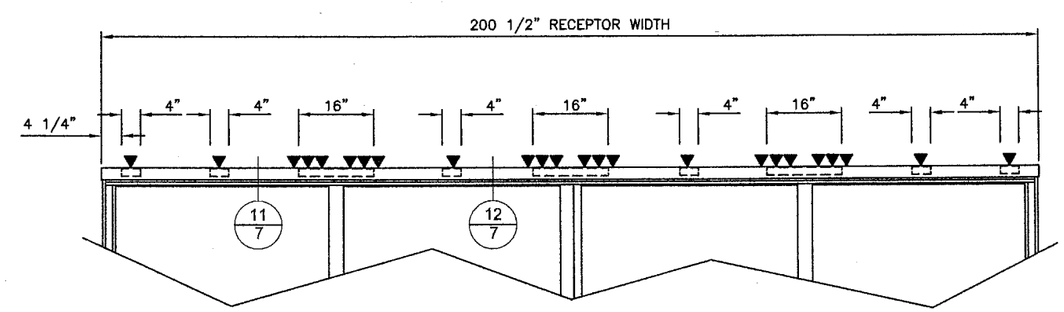

FOR MDBCCO USE ONLY

Approved as complying with the Florida Building Code
Date AUG. 9, 2007
NOA# 07-0103.04
Miami Dade Product Control Division
By Manuel Perez

DRAWN BY:	CHECKED BY:
PLOT:	DATE: 12/11/06

NO.	REVISION DESCRIPTION	BY	DATE

DRAWING TITLE
SERIES 1390 SLIDING GLASS DOOR (LMI)

MANUFACTURER
FULTON WINDOWS

SEAL:
Scott Wolters
7307

SCOTT WOLTERS
FL PE# 62354

WOLTERS ENGINEERING
(COA# 27194)
322 BUCHANAN ST. #809
HOLLYWOOD, FL 33019

DRAWING NO. F1390-01
REV.

SHEET NO. 1 OF 9

OTHER CONFIGURATIONS:

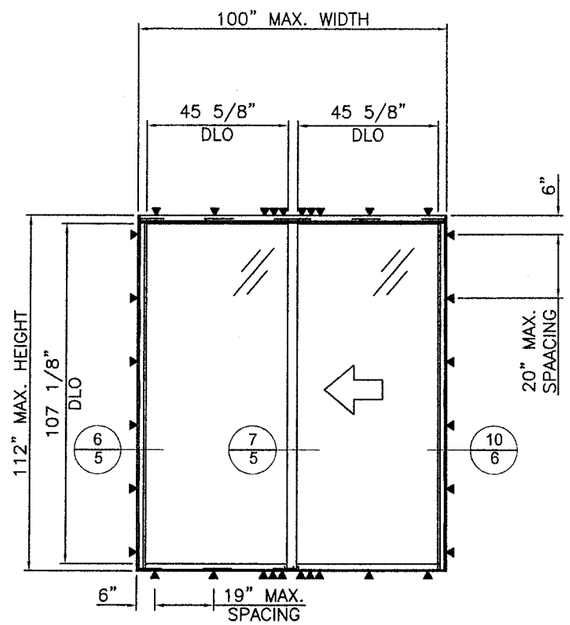

(DX)
SLIDING DOOR

FOR MDBCCO USE ONLY

Approved as complying with the
Florida Building Code
Date AUG. 9, 2007
NOA# 07-0103.04
Miami Dade Product Control
Division
By

DRAWN BY:	CHECKED BY:
PLOT:	DATE: 12/11/06

NO.	REVISION DESCRIPTION	BY	DATE

DRAWING TITLE
SERIES 1390 SLIDING GLASS DOOR (LMI)

MANUFACTURER
FULTON WINDOWS

SEAL:

SCOTT WOLTERS
FL PE# 62354

WOLTERS ENGINEERING
(COA# 27194)
322 BUCHANAN ST #609
HOLLYWOOD, FL 33019

73-07

DRAWING NO. F1390-01
REV.

SHEET NO. 2 OF 9

SEE FASTENER CHART ON SHEET 4 FOR TYPE AND LOCATION OF PERIMETER FASTENERS.

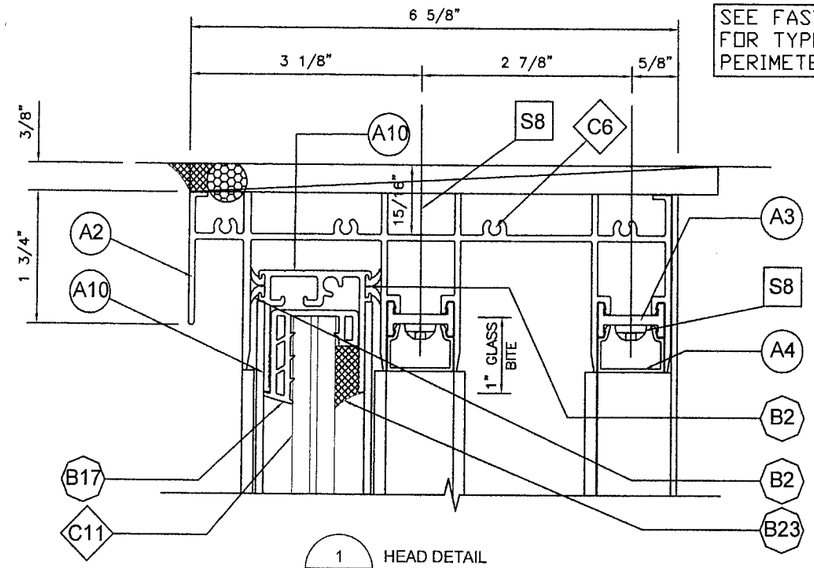

1/3 HEAD DETAIL AT FIXED PANEL

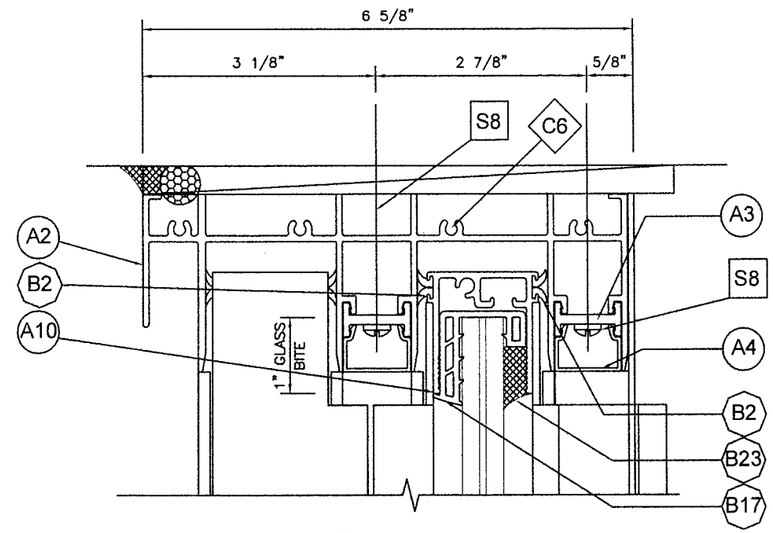

3/3 HEAD DETAIL AT OPERABLE PANEL

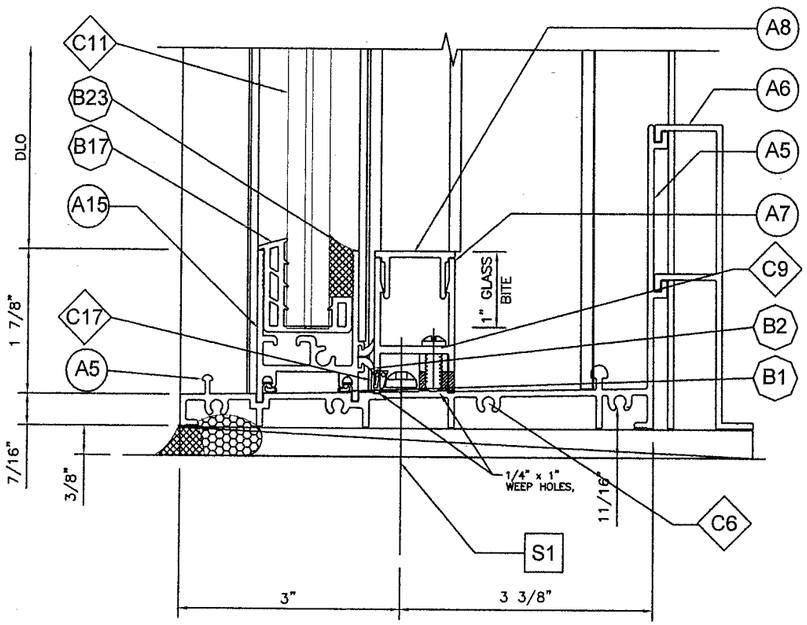

(4" F.E.E. AND 16" O.C.)

2/3 SILL DETAIL AT FIXED PANEL

SEE FASTENER CHART ON SHEET 4 FOR TYPE AND LOCATION OF PERIMETER FASTENERS.

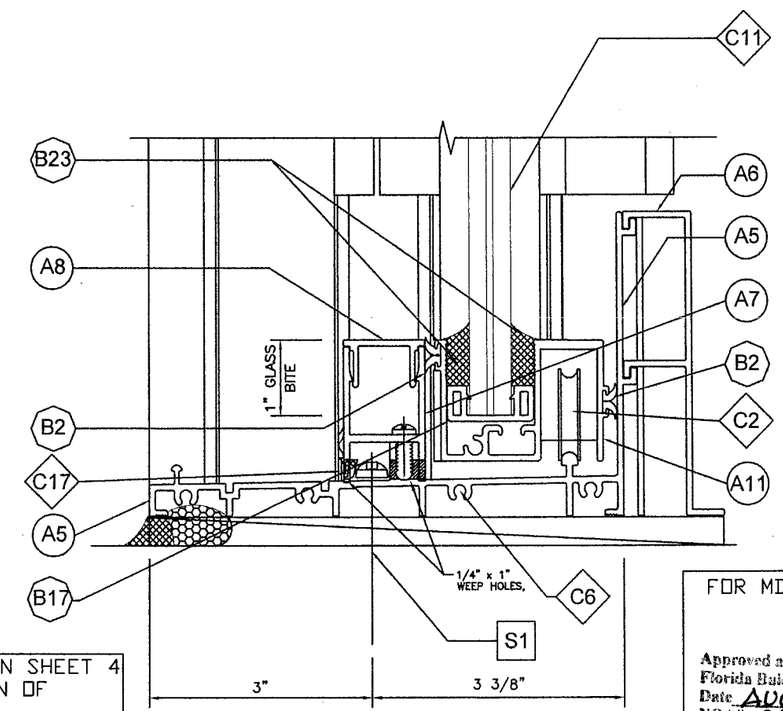

4/3 SILL DETAIL AT OPERABLE PANEL

FOR MDBCCO USE ONLY

Approved as complying with the Florida Building Code
Date AUG. 9, 2007
NOA# 07-0103.04
Miami Dade Product Control Division
By Manuel Sera

DRAWN BY:	CHECKED BY:
PLOT:	DATE: 12/11/06

NO.	REVISION DESCRIPTION	BY	DATE

DRAWING TITLE
SERIES 1390 SLIDING GLASS DOOR (LMI)

MANUFACTURER
FULTON WINDOWS

SEAL: Scott Walters 7-3-07

SCOTT WOLTERS
FL PE# 62354

WOLTERS ENGINEERING
(COA# 27194) #809
322 BUCHANAN ST.
HOLLYWOOD, FL 33019

DRAWING NO. F1390-01
REV.

SHEET NO. 3 OF 9

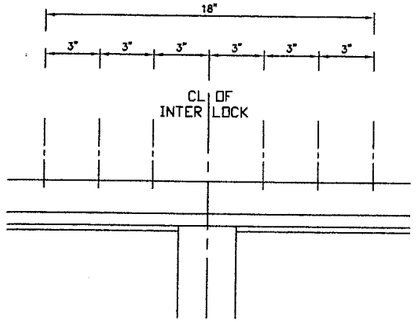

HEAD PATTERN 1
(12 FASTENERS)

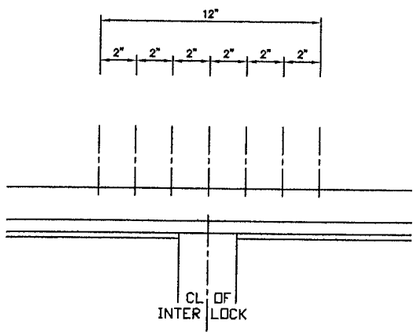

HEAD PATTERN 2
(14 FASTENERS)

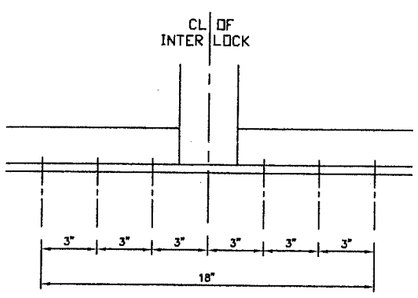

SILL PATTERN 1
(6 FASTENERS)

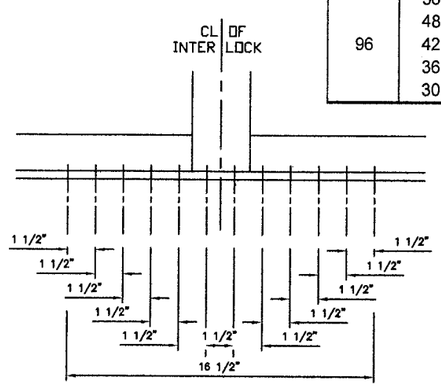

SILL PATTERN 3
(12 FASTENERS)

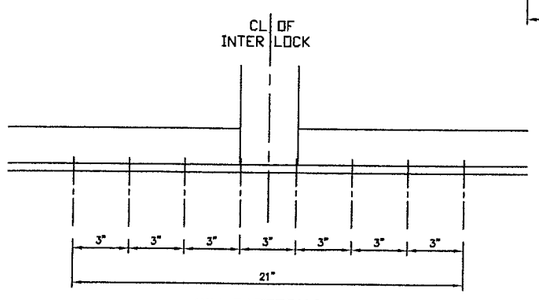

SILL PATTERN 2
(8 FASTENERS)

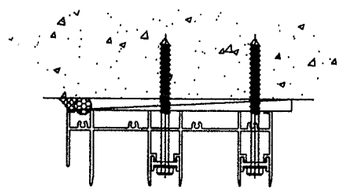

TYPE A IN CONCRETE.

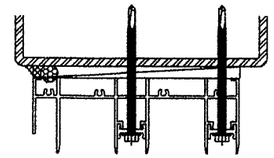

TYPE B IN STEEL.

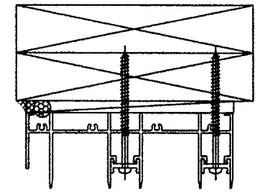

TYPE C IN WOOD.

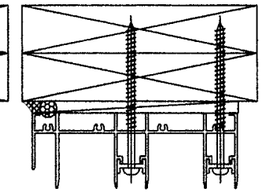

TYPE D IN WOOD.

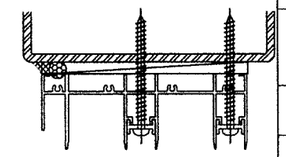

TYPE D IN STEEL.

PERIMETER FASTENERS

PANEL SIZE		ALLOWABLE DESIGN PRESSURE (PSF)																	
		SILL DETAIL											HEAD DETAIL						OPTIONAL HEAD RECEPTOR
		FASTENER TYPE											FASTENER TYPE						
HEIGHT	WIDTH	TYPE A		TYPE B			TYPE C			TYPE D			TYPE A	TYPE B		TYPE C		TYPE D	ALL TYPES
		PAT. 1	PAT. 2	PAT. 1	PAT. 2	PAT. 3	PAT. 1	PAT. 2	PAT. 3	PAT. 1	PAT. 2	PAT. 3	PAT. 1	PAT. 1	PAT. 2	PAT. 1	PAT. 2	PAT. 1	PAT. 1
(IN)	(IN)	(PSF)	(PSF)	(PSF)	(PSF)	(PSF)	(PSF)	(PSF)	(PSF)	(PSF)	(PSF)	(PSF)	(PSF)	(PSF)	(PSF)	(PSF)	(PSF)	(PSF)	(PSF)
110 3/8	51 3/8	85	110	60	80	110	37	49	74	75	100	110	110	100	110	62	72	110	110
	48	88	110	62	83	110	38	51	76	77	103	110	110	103	110	63	74	110	110
	42	97	110	69	91	110	42	56	85	85	110	110	110	110	110	70	82	110	110
	36	110	110	77	103	110	48	64	96	97	110	110	110	110	110	79	92	110	110
	30	110	110	90	110	110	55	74	110	110	110	110	110	110	110	92	108	110	110
108	51 3/8	88	110	62	83	110	38	51	77	78	104	110	110	104	110	64	74	110	110
	48	92	110	65	86	110	40	53	80	81	108	110	110	108	110	66	78	110	110
	42	108	110	71	95	110	44	59	88	89	110	110	110	110	110	73	86	110	110
	36	110	110	81	108	110	50	66	100	101	110	110	110	110	110	83	97	110	110
	30	110	110	94	110	110	58	77	110	110	110	110	110	110	110	96	110	110	110
102	54	92	110	64	86	110	40	53	80	81	108	110	110	108	110	66	77	110	110
	48	99	110	70	93	110	43	57	86	87	110	110	110	110	110	72	84	110	110
	42	109	110	77	102	110	47	63	95	96	110	110	110	110	110	79	92	110	110
	36	110	110	86	110	110	53	71	107	108	110	110	110	110	110	89	104	110	110
	30	110	110	100	110	110	62	83	110	110	110	110	110	110	110	103	110	110	110
96	56	98	110	69	92	110	42	56	85	86	110	110	110	110	110	70	82	110	110
	48	108	110	76	101	110	47	62	94	95	110	110	110	110	110	78	91	110	110
	42	110	110	83	110	110	51	68	103	104	110	110	110	110	110	85	99	110	110
	36	110	110	93	110	110	57	77	110	110	110	110	110	110	110	96	110	110	110
	30	110	110	108	110	110	66	89	110	110	110	110	110	110	110	110	110	110	110

TYPICAL ANCHORS

TYPE A - 5/16" Ø HEX HEAD TAPCON TYPE CONCRETE SCREW, DIRECTLY INTO CONCRETE/CMU, OR THRU WOOD BUCK INTO CONCRETE/CMU. 1 3/4" MIN. EMBEDMENT AND 2 3/16" EDGE DISTANCE.

TYPE B - 1/4" Ø HEX HEAD TEKS TYPE THREAD FORMING SCREW, DIRECTLY INTO STEEL/ALUM, OR THRU WOOD BUCK INTO STEEL/ALUM. 1/4" MIN. PENETRATION THRU STEEL/ALUM, 3/4" MIN. EDGE DISTANCE.

TYPE C - 1/4" Ø PAN HEAD SHEET METAL SCREW OR WOOD SCREW INTO WOOD. 1 1/2" MIN. EMBEDMENT, 1" MIN. EDGE DISTANCE.

TYPE D - 5/16" Ø PAN HEAD SHEET METAL SCREW OR WOOD SCREW INTO WOOD. 1 3/4" MIN. EMBEDMENT, 1 1/4" MIN. EDGE DISTANCE.

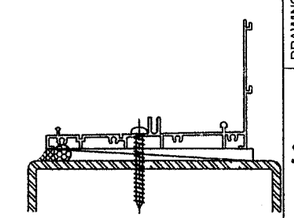

TYPE D IN STEEL.

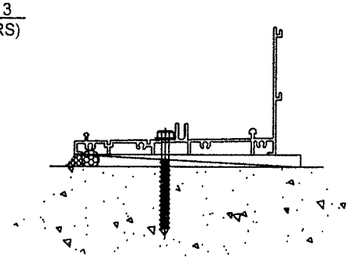

TYPE A IN CONCRETE.

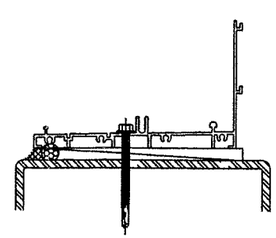

TYPE B IN STEEL.

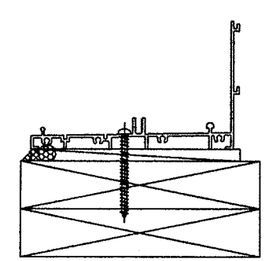

TYPE C IN WOOD.

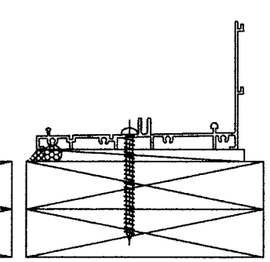

TYPE D IN WOOD.

FOR MDBCCO USE ONLY

Approved as complying with the Florida Building Code
Date AUG. 9, 2007
NOA# 07-0103.04
Miami Dade Product Control Division
By Miguel Perez

DRAWN BY:	CHECKED BY:
PLOT:	DATE: 12/11/06

NO.	REVISION DESCRIPTION	BY	DATE

DRAWING TITLE
SERIES 1390 SLIDING GLASS DOOR (LMI)

MANUFACTURER
FULTON WINDOWS

SEAL:

7-3-07

SCOTT WOLTERS
FL PE# 62304

WOLTERS ENGINEERING
(COA# 27194)
322 BUCHANAN ST. #609
HOLLYWOOD, FL 33019

DRAWING NO. F1390-01
REV.

SHEET NO. 4 OF 9

SEE FASTENER CHART ON SHEET 6 FOR TYPE AND LOCATION OF PERIMETER FASTENERS.

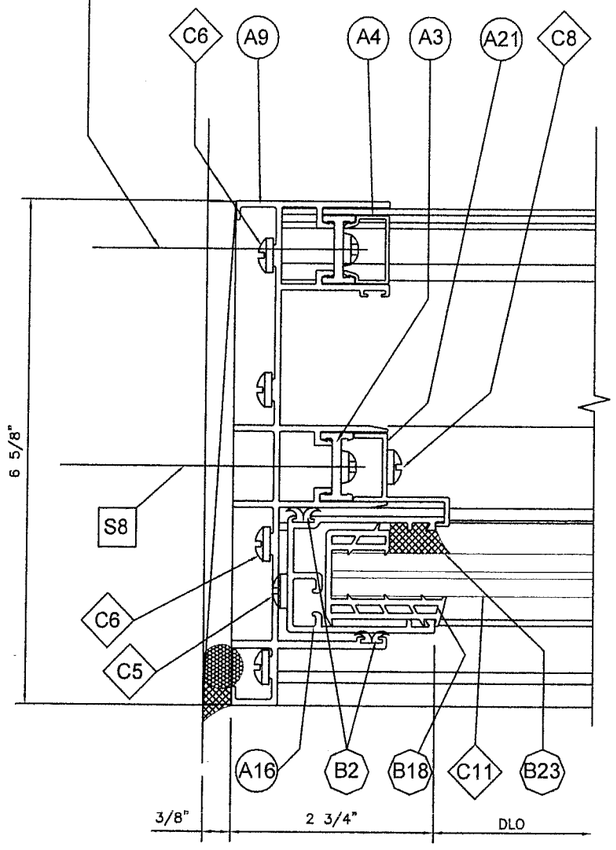

6 / 5 JAMB DETAIL AT FIXED PANEL

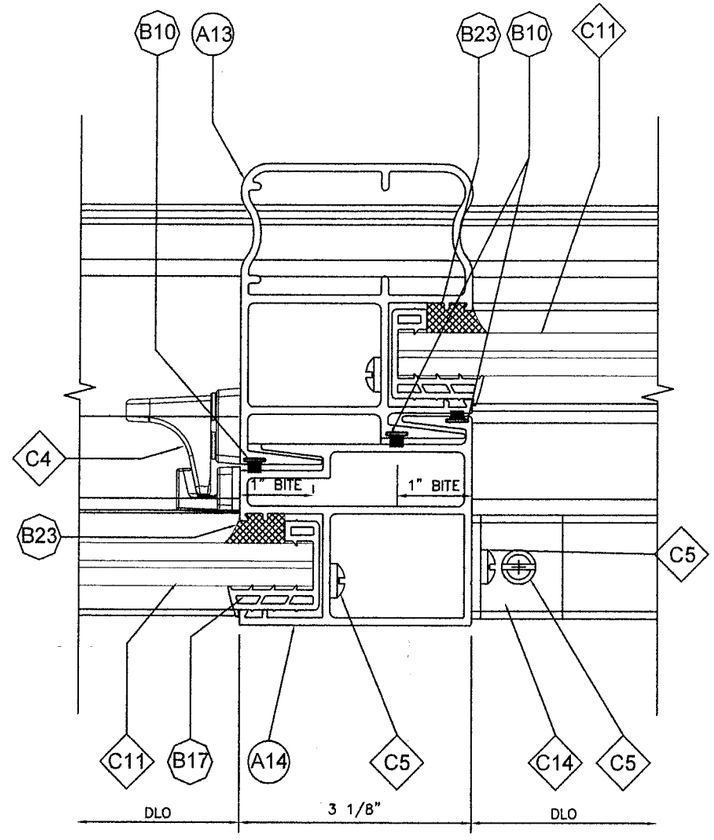

7 / 5 INTERLOCK DETAIL FIXED/OPERABLE PANEL

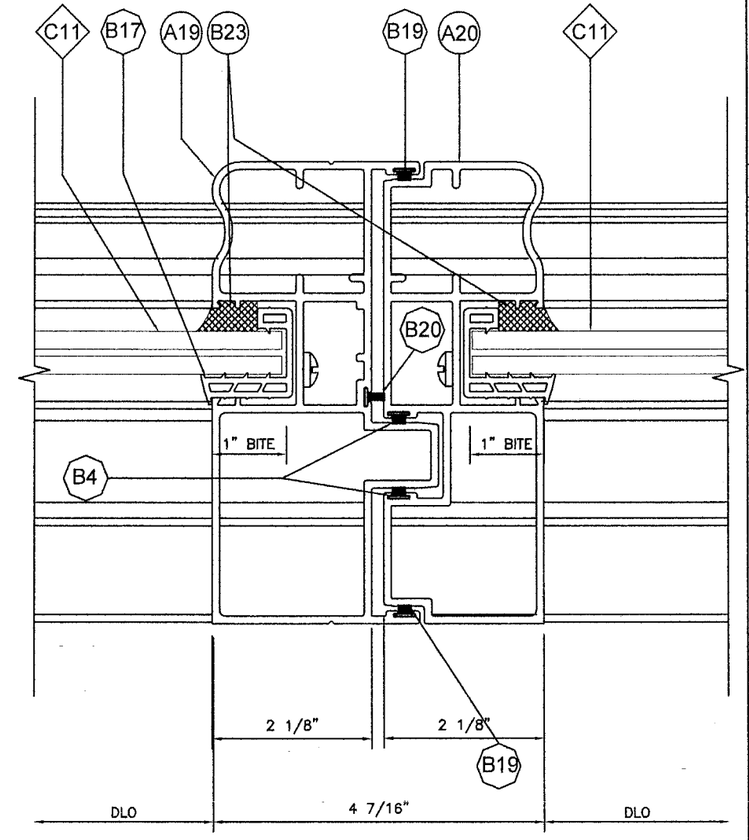

8 / 5 MEETING STILE DETAIL AT OPERABLE PANELS

FOR MDBCCO USE ONLY

Approved as complying with the Florida Building Code
Date AUG. 9, 2007
NOA# 07-0103.04
Miami Dade Product Control Division
By Manuel Perez

DRAWN BY:	CHECKED BY:
PLOT:	DATE: 12/11/06

NO.	REVISION DESCRIPTION	BY	DATE

DRAWING TITLE
SERIES 1390 SLIDING GLASS DOOR (LMI)

MANUFACTURER
FULTON WINDOWS

SEAL:
Scott Wolters
SCOTT WOLTERS
FL PE# 62354

WOLTERS ENGINEERING
(COA# 27194)
322 BUCHANAN ST. #509
HOLLYWOOD, FL 33019

7-3-07

DRAWING NO. F1390-01
REV.

SHEET NO. 5 OF 9

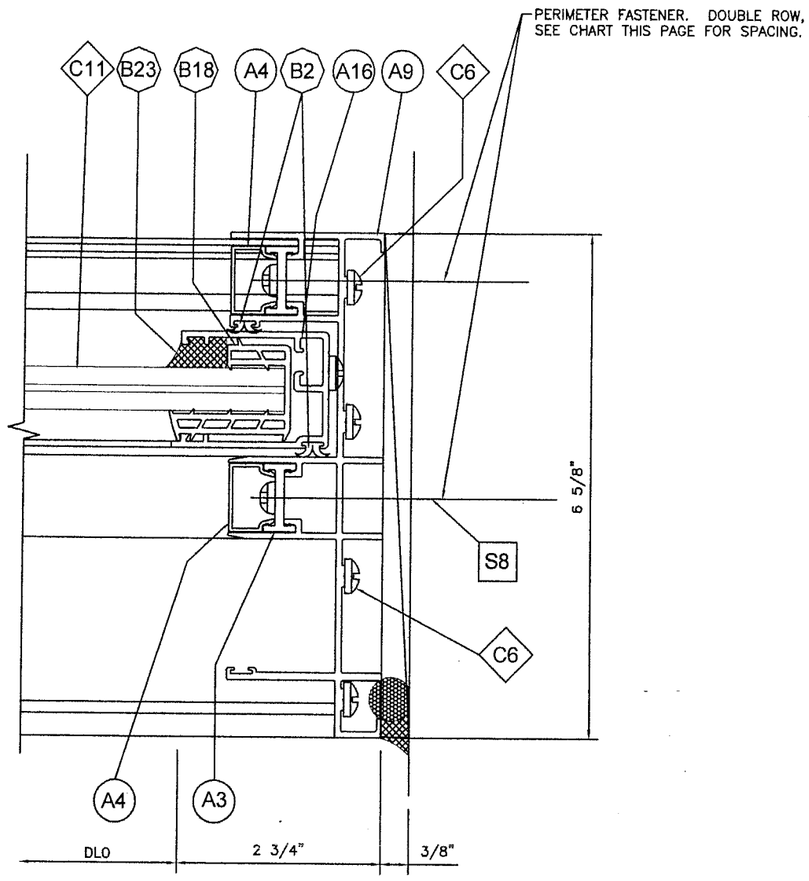

10 / 6 LOCK JAMB DETAIL AT OX SLIDER

JAMB FASTENER SCHEDULE

DESIGN PRESSURE (PSF)	PANEL WIDTH (IN)	MAX. FASTENER SPACING (IN) — FASTENER TYPE: TYPE A (IN)	TYPE B (IN)	TYPE C (IN)	TYPE D (IN)
110	56	16	11	7	14
	48	19	13	8	16
	42	20	15	9	19
	36	20	18	11	20
	30	20	20	13	20
100	56	18	13	8	16
	48	20	15	9	18
	42	20	17	10	20
	36	20	20	12	20
	30	20	20	15	20
90	56	20	14	8	18
	48	20	17	10	20
	42	20	19	11	20
	36	20	20	13	20
	30	20	20	16	20
80	56	20	16	10	20
	48	20	19	11	20
	42	20	20	13	20
	36	20	20	15	20
	30	20	20	18	20
70	56	20	18	11	20
	48	20	20	13	20
	42	20	20	15	20
	36	20	20	17	20
	30	20	20	20	20

TYPICAL ANCHORS

TYPE A - 5/16" Ø HEX HEAD TAPCON TYPE CONCRETE SCREW, DIRECTLY INTO CONCRETE/CMU, OR THRU WOOD BUCK INTO CONCRETE/CMU. 1 3/4" MIN. EMBEDMENT AND 2 3/16" EDGE DISTANCE.

TYPE B - 1/4" Ø HEX HEAD TEKS TYPE THREAD FORMING SCREW, DIRECTLY INTO STEEL/ALUM, OR THRU WOOD BUCK INTO STEEL/ALUM. 1/4" MIN. PENETRATION THRU STEEL/ALUM, 3/4" MIN. EDGE DISTANCE.

TYPE C - 1/4" Ø PAN HEAD SHEET METAL SCREW OR WOOD SCREW INTO WOOD. 1 1/2" MIN. EMBEDMENT, 1" MIN. EDGE DISTANCE.

TYPE D - 5/16" Ø PAN HEAD SHEET METAL SCREW OR WOOD SCREW INTO WOOD. 1 3/4" MIN. EMBEDMENT, 1 1/4" MIN. EDGE DISTANCE.

FOR MDBCCO USE ONLY

Approved as complying with the Florida Building Code
Date AUG. 9, 2007
NOA# 07-0103.04
Miami Dade Product Control Division
By

DRAWN BY:	CHECKED BY:
PLOT:	DATE: 12/11/06

NO.	REVISION DESCRIPTION	BY	DATE

DRAWING TITLE
SERIES 1390 SLIDING GLASS DOOR (LMI)

MANUFACTURER
FULTON WINDOWS

SEAL
Scott Wolters
7-3-07

SCOTT WOLTERS
FL PE# 62354

WOLTERS ENGINEERING
(CO/A# 27194)
322 BUCHANAN ST. #609
HOLLYWOOD, FL 33019

DRAWING NO. F1390-01
REV.

SHEET NO. 6 OF 9

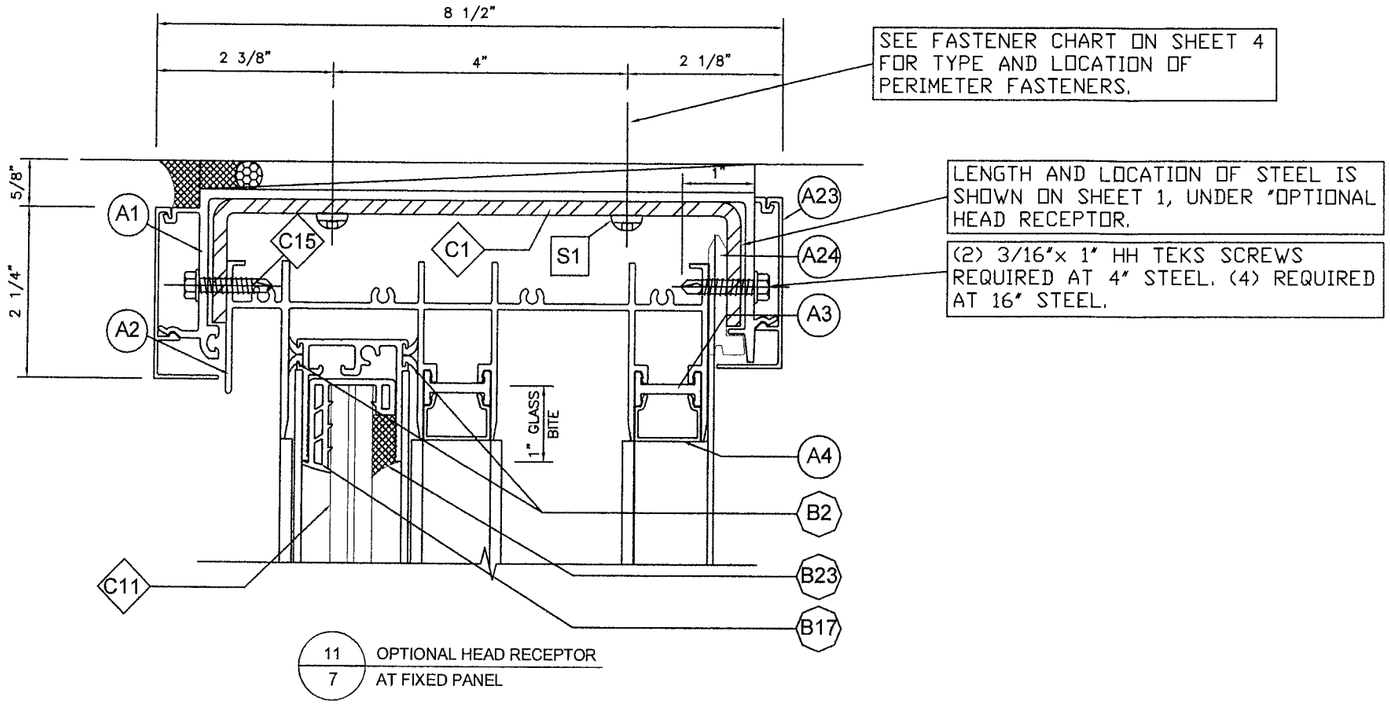

11 / 7 OPTIONAL HEAD RECEPTOR AT FIXED PANEL

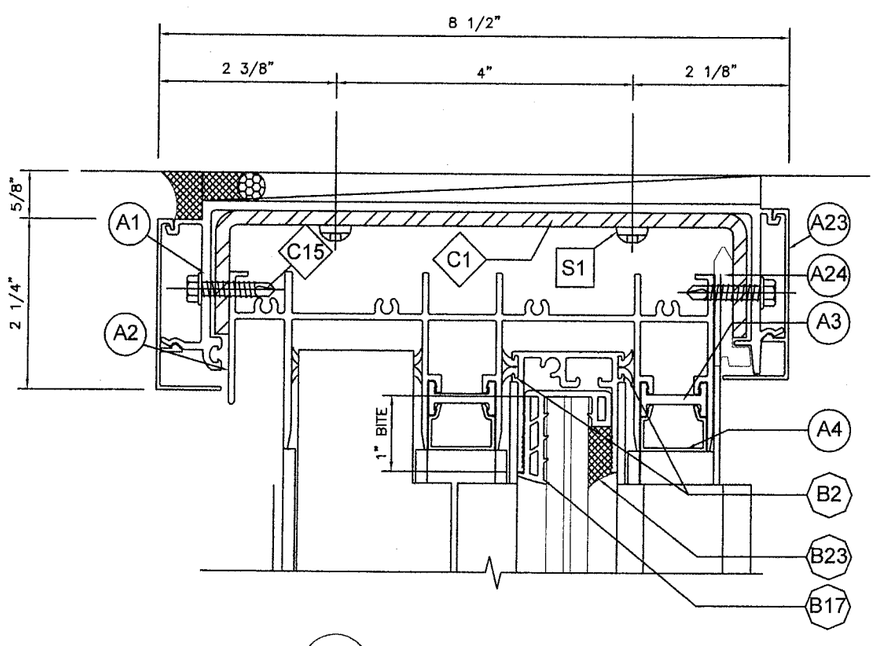

12 / 7 OPTIONAL HEAD RECEPTOR AT OPERABLE PANEL

FOR MDBCCO USE ONLY

Approved as complying with the Florida Building Code
Date AUG. 9, 2007
NOA# 07-0103.04
Miami Dade Product Control Division
By

DRAWN BY:	CHECKED BY:
PLOT:	DATE: 12/11/06

NO.	REVISION DESCRIPTION	BY	DATE

DRAWING TITLE
SERIES 1390 SLIDING GLASS DOOR (LMI)

MANUFACTURER
FULTON WINDOWS

SEAL:

SCOTT WOLTERS
FL PE# 62354

WOLTERS ENGINEERING
(COA# 27194)
322 BUCHANAN ST. #608
HOLLYWOOD, FL 33019

7-3-07

DRAWING NO. F1390-01
REV.

SHEET NO. 7 OF 9

AS-46033 1

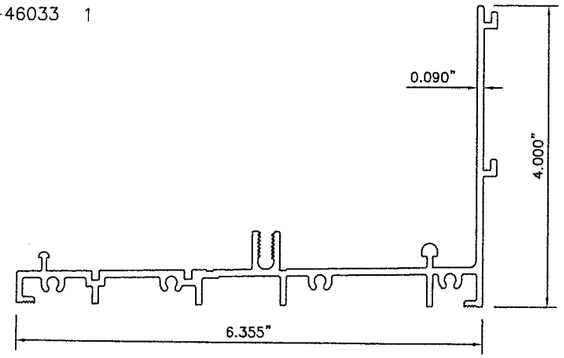

A5

EH12958

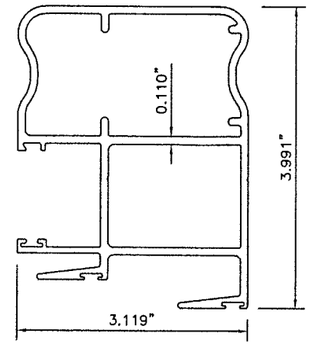

A13

ES12954

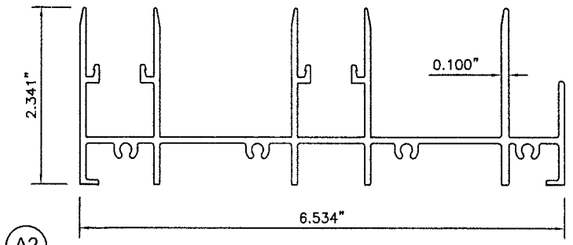

A2

ES12964

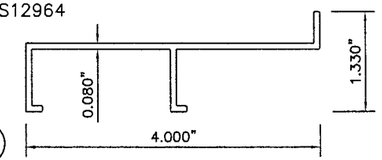

A6

ES12965

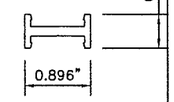

A3 (ACTUAL SIZE)

ES12966

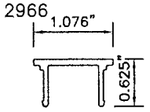

A8

AH-47826 1

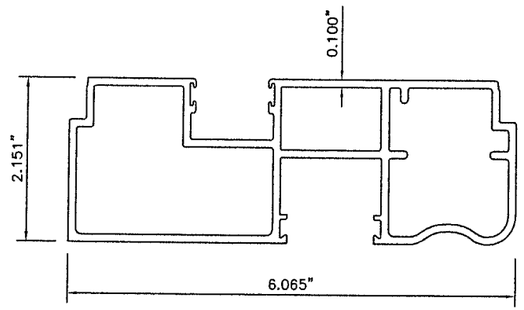

A20

EH12959

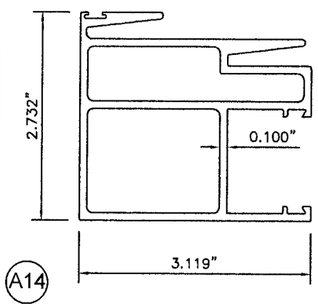

A14

ES12955

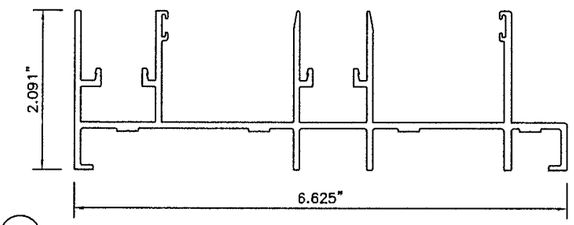

A9

ES13033

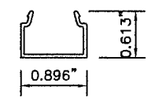

A4 (ACTUAL SIZE)

130-020

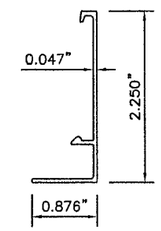

A23

130-019

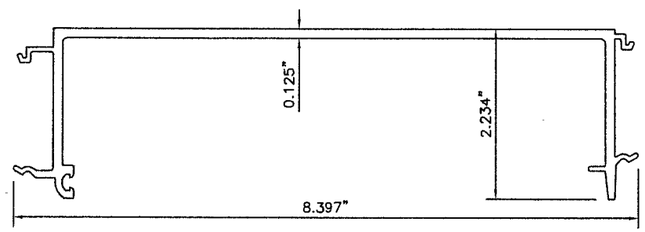

A1

AH-47827 1

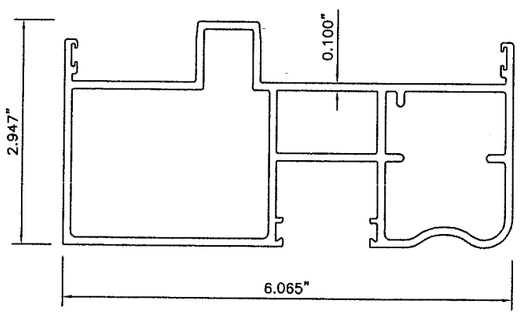

A19

EH13057

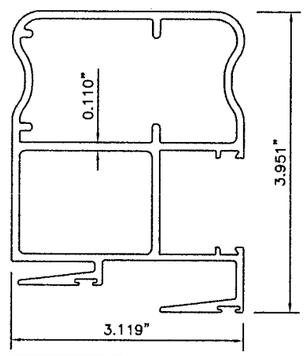

A17

ES12960

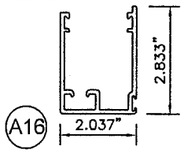

A16

ES12961

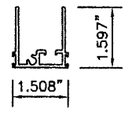

A10

ES12962

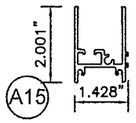

A15

7.165"

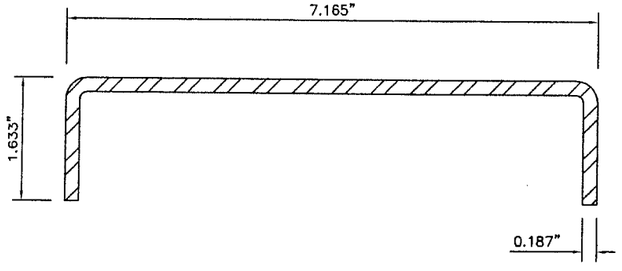

C1

EH13010

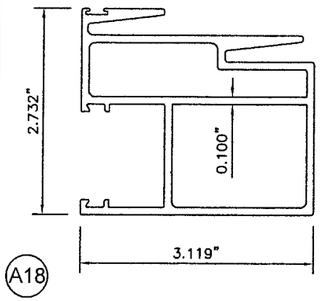

A18

ES12963

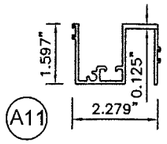

A11

ES12956

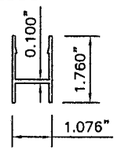

A7

ES12957

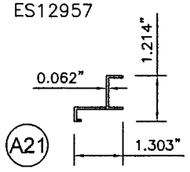

A21

FOR MDBCCO USE ONLY

Approved as complying with the Florida Building Code
Date AUG. 9, 2007
NOA# 07-0103.04
Miami Dade Product Control Division
By

DRAWN BY:	CHECKED BY:
PLOT:	DATE: 12/11/06

NO.	REVISION DESCRIPTION	BY	DATE

DRAWING TITLE
SERIES 1390 SLIDING GLASS DOOR (LMI)

MANUFACTURER
FULTON WINDOWS

SEAL:

SCOTT WOLTERS
FL Reg# 62354

WOLTERS ENGINEERING
(COA# 27194)
322 BUCHANAN ST. #609
HOLLYWOOD, FL 33019

7-3-07

DRAWING NO. F1390-01
REV.

SHEET NO. 8 OF 9

○ SECTION A: ALUMINUM EXTRUSIONS

ITEM NO.	PART #	QUANTITY	DESCRIPTION	MATERIAL	REMARKS / SUPPLIER
A1.	130-019	1	6" RECEPTOR FRAME	6063-T6	Spectra Aluminum
A2.	ES12954	1	FRAME HEAD	6063-T6	Canart Aluminum
A3.	ES12965	2	HEAD/FRAME MOUNTING BAR	6063-T6	Canart Aluminum
A4.	ES13033	2	HEAD/JAMB COVER	6063-T6	Canart Aluminum
A5.	AS46033	1	SILL	66018-T6	Indalex Aluminum
A6.	ES12964	1	INTERIOR SILL COVER	6063-T6	Canart Aluminum
A7.	ES12956	1	PANEL SEPARATOR AT SILL	6063-T6	Canart Aluminum
A8.	ES12966	1	PANEL SEPARATOR COVER	6063-T6	Canart Aluminum
A9.	ES12955	2	FRAME JAMB	6063-T6	Canart Aluminum
A10.	ES12961	1	MOVING/FIX TOP RAIL	6063-T6	Canart Aluminum
A11.	ES12963	1	MOVING BOTTOM RAIL	6063-T6	Canart Aluminum
A12.					
A13.	EH12958	1	MOVING INTERLOCK	6063-T6	Canart Aluminum
A14.	EH12959	1	FIX INTERLOCK	6063-T6	Canart Aluminum
A15.	ES12962	1	FIX BOTTOM RAIL	6063-T6	Canart Aluminum
A16.	ES12960	1	FIX SIDE RAIL	6063-T6	Canart Aluminum
A17.	EH13057	1	RIGHT MOVING INTERLOCK	6063-T6	Canart Aluminum
A18.	EH13010	1	RIGHT FIXED INTERLOCK	6063-T6	Canart Aluminum
A19.	AH47827	1	MOVING MALE MULLION FOR OXXO	6063-T6	Indalex Aluminum
A20.	AH47826	1	MOVING FEMALE MULLION FOR OXXO	6063-T6	Indalex Aluminum
A21	ES12957	1	FIXED PANEL RETAINING CLIP	6063-T6	Canart Aluminum
A22.		1	ALUMINUM SCREEN RAIL	6063-T6	Indalex Aluminum
A23.	130-020	1	RECEPTOR SNAP COVER	6063-T5	Indalex Aluminum
A24.	130-021	1	RECEPTOR SPACER BLOCK	6063-T5	Indalex Aluminum
A25.	130-002	1	4" TUBULAR MULLION	6063-T6	Indalex Aluminum
A26.	130-008	1	GLAZING STOP SNAP COVER	6063-T5	Indalex Aluminum
A27.	130-009	1	GLAZING STOP CLIP	6063-T5	Indalex Aluminum
A28.	130-010	1	EXTENDED 1 3/4" LEG HEAD FRAME	6063-T6	Indalex Aluminum
A29.	130-011	1	HIGH PERFORMANCE SILL	6063-T6	Indalex Aluminum
A30.	130-012	1	PERIMETER FRAME	6063-T6	Indalex Aluminum
A31.	130-015	1	HIGH PERFORMANCE SILL COVER	6063-T6	Indalex Aluminum
A32.	130-016	1	STIFFENER	6063-T6	Indalex Aluminum
A33.	130-017	1	SLIDING DOOR ADAPTOR MULLION	6063-T6	Indalex Aluminum

1 3/8" Min. Screw Embedment into Substrate (Wood Buck)

□ SECTION C: HARDWARE AND MISCELLANEOUS ITEMS

ITEM NO.	PART #	QUANTITY	DESCRIPTION	MATERIAL	REMARKS / SUPPLIER
S1.	----------	See Anchor Dia.	#12 x 3" Pan Head St. Stl. Screw	410 (H) St. St.	
S2.	----------	See Anchor Dia.	#12 x 1 1/2" Pan Head St. Stl. Screw	410 (H) St. St.	
S3.	----------	See Anchor Dia.	#12 x 2" Pan Head St. Stl. Screw	410 (H) St. St.	
S4.	----------	See Anchor Dia.	#12 x 1" Pan Head St. Stl. Screw	410 (H) St. St.	
S5.	----------	See Anchor Dia.	#12 x 3" Flat Head St. Stl. Screw	410 (H) St. St.	
S6.	----------	See Anchor Dia.	#12 x 1 1/2" Flat Head St. Stl. Screw	410 (H) St. St.	
S7.	----------	See Anchor Dia.	#14 x 3" Pan Head St. Stl. Screw	410 (H) St. St.	
S8.	----------	See Anchor Dia.	#12 x 3 1/2" Pan Head St. Stl. Screw	410 (H) St. St.	
S9	----------	See Anchor Dia.	3/8" x 4" S.S. Round Head Slve Anch	410 (H) St. St.	
S10	----------	5	1/4"- 14 X 3/4" Tek screw herdened H.W.H	STEEL	INTERLOCK

○ SECTION B: PLASTICS EXTRUSIONS & SEALANTS

ITEM NO.	PART #	QUANTITY	DESCRIPTION	MATERIAL	REMARKS / SUPPLIER
B1.	B 3903	AS REQ'D	BULB TYPE VINYL	VINYL	CANDOR PLASTICS
B2.	B 3823	AS REQ'D	VINYL TRIPLE FIN 0.30" x 0.30 BULB SEAL	VINYL	CANDOR PLASTICS
B3.	B 3823	AS REQ'D	VINYL TRIPLE FIN 0.30" x 0.30 BULB SEAL	VINYL	CANDOR PLASTICS
B4.	FS 7525-270	AS REQ'D	SCHLEGEL WOOL PILE W/ WEATHER FIN	VINYL	SCHLEGEL
B5.					
B6.					
B7.	FS 7530-270	AS REQ'D	SCHLEGEL WOOL PILE W/ WEATHER FIN	WOOL	SCHLEGEL
B8.	FS 7535-270	AS REQ'D	SCHLEGEL WOOL PILE W/ WEATHER FIN	WOOL	SCHLEGEL
B9.					
B10.	PB 8425-270	AS REQ'D	SCHLEGEL WOOL PILE NO FIN	WOOL	SCHLEGEL
B11.		AS REQ'D	AIR PAMPER ON PANEL SEPARATOR	RIGID VINYL	CANDOR PLASTICS
B12.	HC140HD	2	0.25" x 1.75" x 6.25" SELF ADHESIVE FOAM PAD	CLOSED CELL	TOP OF JAMB
B13.	HC140SILL	2	0.25" x 1.00" x 6.25" SELF ADHESIVE FOAM PAD	CLOSED CELL	BOTTOM OF JAMB
B14.					
B15.	DP AB 100 500	4	1" x 1.25" LONG SELF ADHESIVE PILE PAD	WOOL	AT MOVING INTERLOCK TOP AND BOTTOM
B16.	DP AB 100 250	2	1" x 1.25" LONG SELF ADHESIVE PILE PAD	WOOL	AT JAMB TOP AND BOTTOM AT MOVING SIDE
B17.	EPDM SPLINE 1	AS REQ'D	'U' SHAPED GLASS SPLINE SHORT	EPDM	TREMCO
B18.	EPDM SPLINE 2	AS REQ'D	'U' SHAPED GLASS SPLINE LONG	EPDM	TREMCO
B19.	25027045GYWP	AS REQ'D	SCHLEGEL WOOL PILE	WOOL	SCHLEGEL
B20.	2311	1	VINYL BULB SEAL	VINYL	CANDOR PLASTICS
B21.	081-001	AS REQ'D	POLYSHIM II TAPE	BUTYL	TREMCO
B22.	FOAM	AS REQ'D	OPEN CELL NON GASEOUS BACKER ROD	FOAM	INDUSTRIAL THERMO POLYMERS INC.
B23.	060-067 / 68	AS REQ'D	TREMCO PROGLAZE II SILICONE	SILICONE	TREMCO
B24.	SETTING BLOCK	AS REQ'D	1/2" X 1/4" X 4" SCR900 SETTING BLOCK	SCR900	TREMCO
B25.	ARROW SHIM	AS REQ'D	1/4" X 3/8" ARROW SHIM GASKET SCR900	SCR900	TREMCO

* 1 3/8" Min. Screw Embedment into Substrate (Wood Buck)

◇ SECTION C: HARDWARE AND MISCELLANEOUS ITEMS

ITEM NO.	PART #	QUANTITY	DESCRIPTION	MATERIAL	REMARKS / SUPPLIER
C1.		1	HEAD RECEPTOR REINFORCEMENT	GALV. STEEL	A33 STEEL / FULTON
C2.	21001SS	2	TANDEM STAINLESS STEEL ROLLER	ST. STEEL	BOTTOM MOVING PANEL
C3.		1	REINFORCEMENT BOTTOM MOVING INTERLOCK	STEEL	.125" x 1.125" x 12"
C4.	27.20.02	1	CAM HANDLES / SASH LOCK	ZINC/STEEL	MOVING INTERLOCK
C5.		8 / PANEL	#12 x 1" PH. SMS. - PANEL ASSEMBLY SCREW	ST. STEEL	PANEL CORNERS
C6.		16 / FRAME	#8 x 1.25" PH. SMS. - FRAME ASSEMBLY SCREW	ST. STEEL	FRAME CORNERS
C7.		2 / CAM	10-32 5/8" FLAT LOCK ASSEMBLY SCREW	ST. STEEL	LATCH AT MOVING INTERLOCK
C8.		4 / CLIP	#8 x 1.25 PH. SMS - RETAINING CLIP SCREW	ST. STEEL	JAMB FIXED SIDE
C9.	1/4-20 x 0.50	AS REQ'D	ALLEN HEAD SEPARATOR INSTALL SCREW	ST. STEEL	SILL
C10.		AS REQ'D	INSTALLATION SCREWS AS PER CALCULATIONS	ST. STEEL	JAMB, HEAD, SILL
C11.	----------		Impact Rated Glass	(See Elev's.)	
C12.			FIBREGLASS SCREEN MESH	FIBREGLASS	
C13.			SCREEN ROLLER WHEEL	STEEL	
C14.			FIXED SASH ANGLE BLOCK	ALUMINUM	
C15.		AS REQ'D	#10-24 x 1" LG. TEK SCREW	ST. STEEL	HEAD RECEPTOR
C16.		12" O/C	#10 x 1/2" PH TEK	ST. STEEL	GLAZING STOP CLIP
C17.		AS REQ'D	WEEP DOOR	PLASTIC	SILL
C19.		AS REQ'D	#8 X 1" PH S.S. SCREWS	ST. STL.	
C20.		AS REQ'D	#10 X 1" FH S.S. SCREWS	ST. STL.	

FOR MDBCCD USE ONLY

Approved as complying with the Florida Building Code
Date AUG. 9, 2007
NOA# 07-0103.04
Miami Dade Product Control Division
By

DRAWN BY:	CHECKED BY:
PLOT:	DATE: 12/11/06

NO.	REVISION DESCRIPTION	BY	DATE

DRAWING TITLE
SERIES 1390 SLIDING GLASS DOOR (LMI)

MANUFACTURER
FULTON WINDOWS

SEAL:

7-3-07

SCOTT WOLTERS
FL PE# 62354

WOLTERS ENGINEERING
(COA# 27194)
322 BUCHANAN ST. #509
HOLLYWOOD, FL 33019

DRAWING NO. F1390-01
REV.

SHEET NO. 9 OF 9